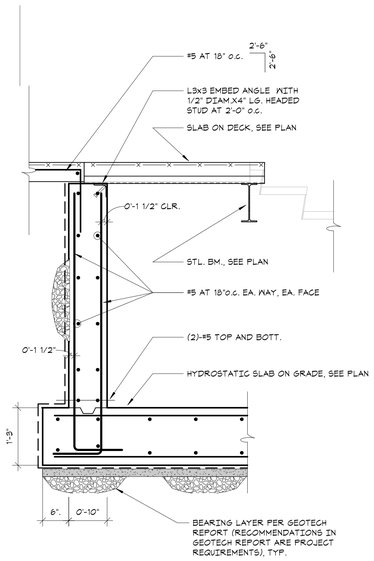

1 SECTION
3/4" = 1'-0"

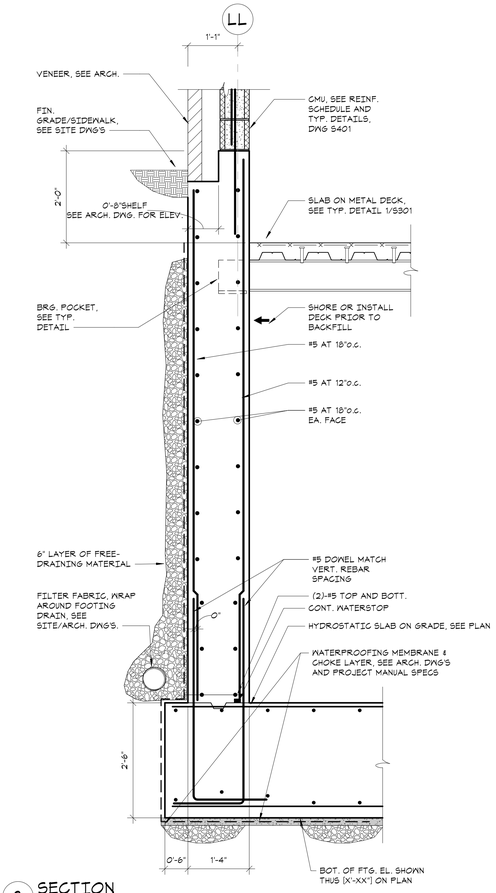

2 SECTION
3/4" = 1'-0"

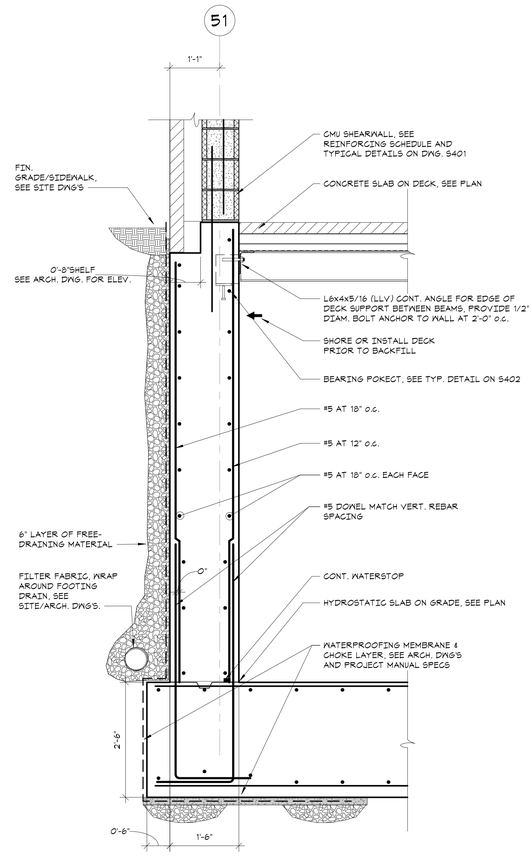

3 SECTION
3/4" = 1'-0"

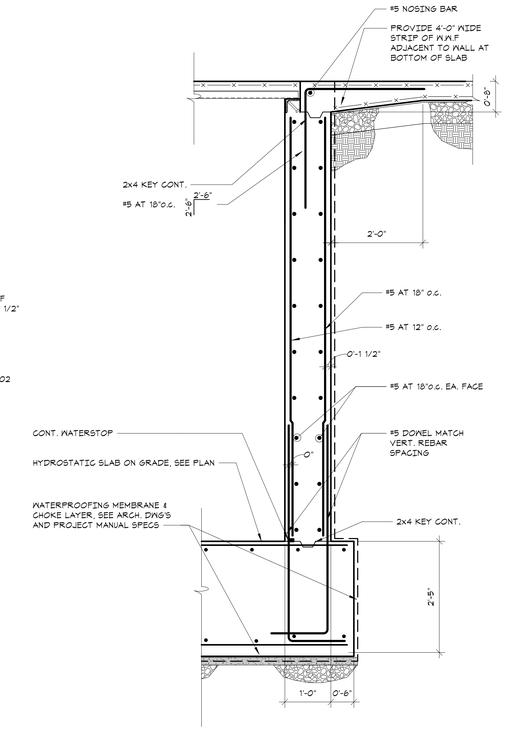

4 SECTION
3/4" = 1'-0"

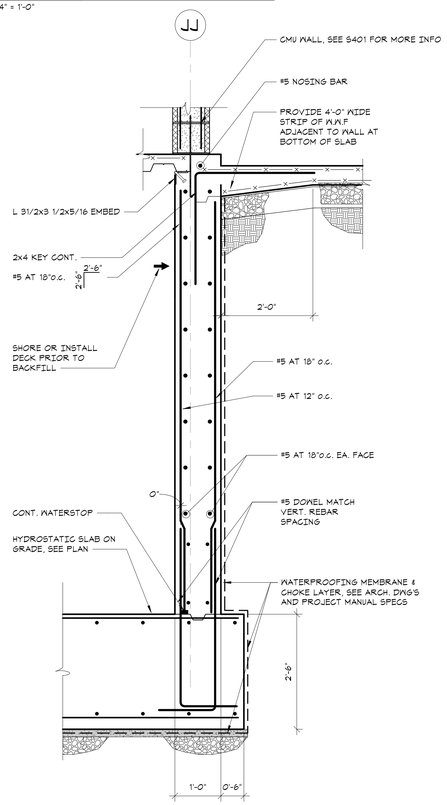

5 SECTION
3/4" = 1'-0"

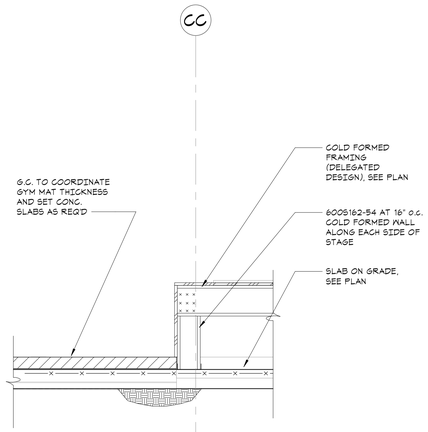

6 SECTION
3/4" = 1'-0"

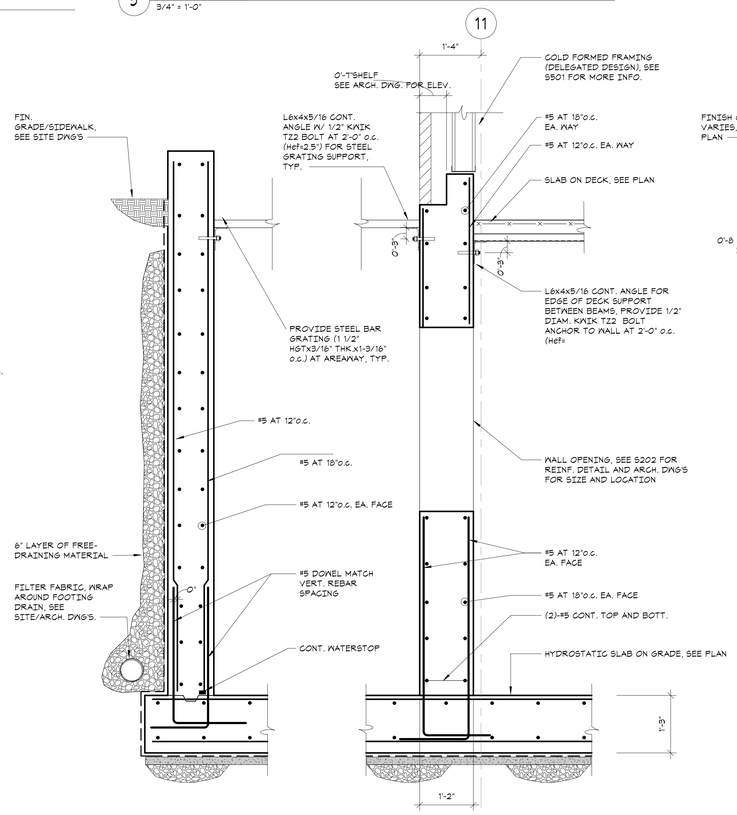

7 SECTION
3/4" = 1'-0"

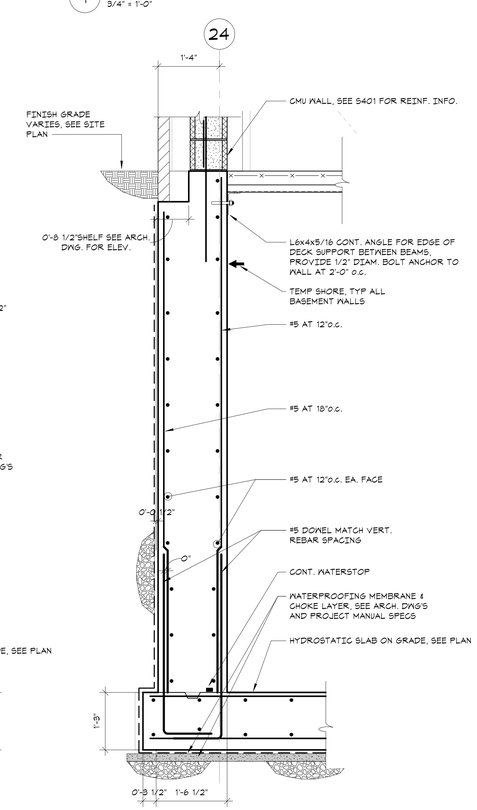

8 SECTION
3/4" = 1'-0"

NEW COMMUNITY SCHOOL 35 AT ST DENIS SITE

YONKERS JOINT SCHOOL CONSTRUCTION BOARD

121 McLean Avenue, Yonkers, NY 10705

KG+D . ARCHITECTS PC
285 MAIN STREET MOUNT KISCO . NEW YORK . 10549
P:914.666.5900 KGDARCHITECTS.COM

The DiSalvo Engineering Group
Structural Engineers
83 Wooster Heights Road | Suite 200
Lee Farm Corporate Park | Danbury, CT 06810
(203) 490-4140 | www.tdeg.com

NY SED PROJECT CONTROL NO.

66-23-00-01-0-346-001

CONSTRUCTION DOCUMENTS

OWNERSHIP, USE AND ALTERATION OF DOCUMENTS:
The Client acknowledges that the documents, drawings, specifications including electronic media files are instruments of The DiSalvo Engineering Group's services and shall remain the property of The DiSalvo Engineering Group. The Client or any person or entity that acquires or obtains the drawings and specifications from or through The Client shall not use them on any other project, shall not modify, alter or change the drawings and specifications without written authorization from The DiSalvo Engineering Group. Furthermore, The Client agrees to the fullest extent permitted by law to indemnify and hold harmless The DiSalvo Engineering Group, its officers, directors and employees from any and all claims, suits, liability, demands or costs, including attorney fees arising out of or resulting therefrom.

SCOPE OF WORK RELATED TO SECTIONS AND DETAILS:
Work shown as "Typical Details" apply throughout the project as required.
Work shown as "Sections" shall be considered to apply for the same and similar conditions in the building.

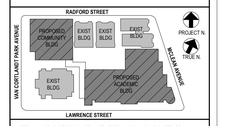

NOTE: ALL IDEAS, DESIGNS, ARRANGEMENTS AND PLANS INDICATED OR REPRESENTED BY THIS DRAWING ARE OWNED BY AND ARE THE PROPERTY OF KAEYER, GARMENT, & DAVIDSON ARCHITECTS, PC (KG&D), AND WERE CREATED FOR USE ON THIS PROJECT. NONE OF SUCH IDEAS, DESIGNS, ARRANGEMENTS OR PLANS SHALL BE USED BY OR DISCLOSED TO ANY PURPOSE WHATSOEVER WITHOUT THE WRITTEN PERMISSION OF (KG&D).

WRITTEN DIMENSIONS ON THIS DRAWING SHALL HAVE PRECEDENCE OVER SCALED DIMENSIONS. CONTRACTOR SHALL VERIFY ALL ACTUAL DIMENSIONS AND CONDITIONS ON THE JOB AND THE ARCHITECT MUST BE NOTIFIED OF ANY VARIATIONS FROM DIMENSIONS AND CONDITIONS SHOWN. SHOP DETAILS MUST BE SUBMITTED TO THIS OFFICE FOR APPROVAL BEFORE PROCEEDING WITH FABRICATION.

ALTERATIONS BY ANY PERSON, IN ANY WAY, OF ANY ITEM CONTAINED ON THIS DOCUMENT, UNLESS ACTING UNDER THE DIRECTION OF THE LICENSED ARCHITECT WHOSE PROFESSIONAL SEAL IS AFFIXED HERETO, IS A VIOLATION OF TITLE VII, SECT. 65.5 (h) OF NEW YORK STATE LAW.
COPYRIGHT KAEYER, GARMENT • DAVIDSON ARCHITECTS & ENGINEERS, PC
ALL RIGHTS RESERVED.

Professional Seal

No.	Date	Issue
4	11/01/21	ISSUE FOR BID
3	07/14/21	CONSTRUCTION DOCS - NYSED
2	12/15/20	DESIGN DEVELOPMENT
1	08/31/20	SCHEMATIC DESIGN

Sheet Title

FOUNDATION SECTIONS

Job No.	Date
20142.00	10/30/2020
Scale: AS NOTED	Engin'r / Checked: Author Checker

Sheet Number

S211