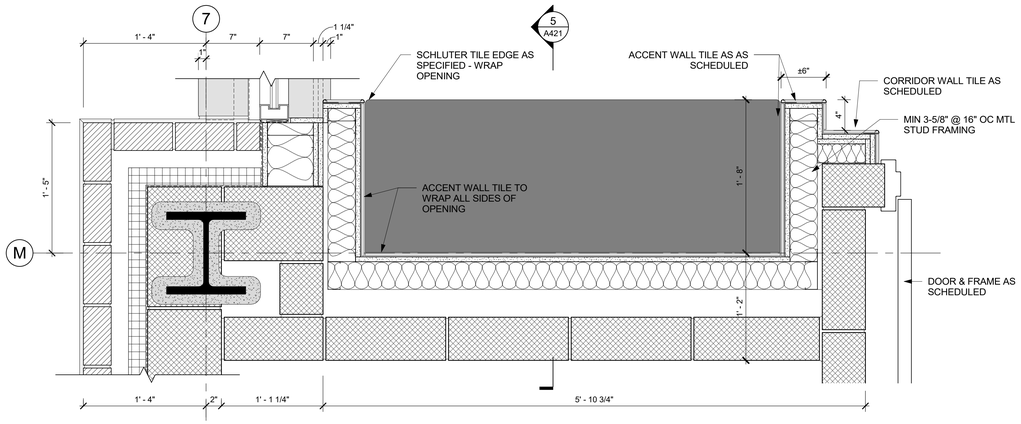

6 PLAN DETAIL THRU CORRIDOR NOOK
1 1/2" = 1'-0"

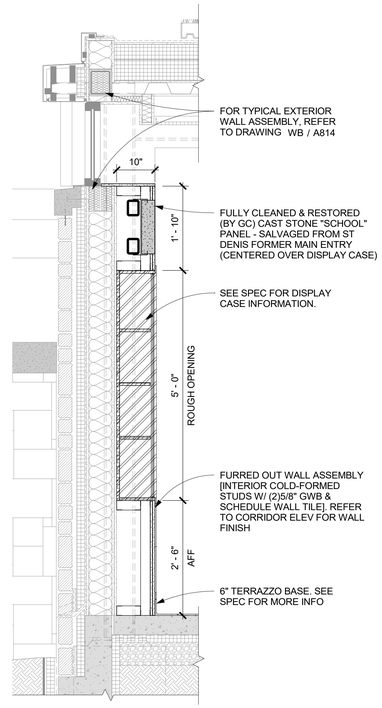

2 SECTION @ DISPLAY CASE
3/4" = 1'-0"

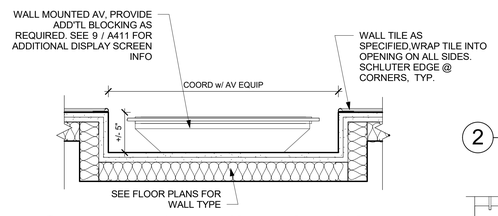

4 PLAN DETAIL - AV DISPLAY OPENING
1 1/2" = 1'-0"

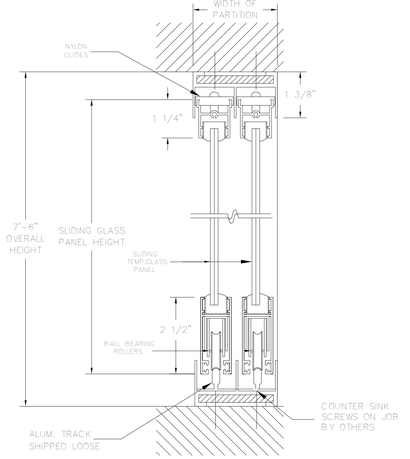

8 BOTTOM ROLLER SLIDING GLASS WHITEBOARD DETAIL
6" = 1'-0"

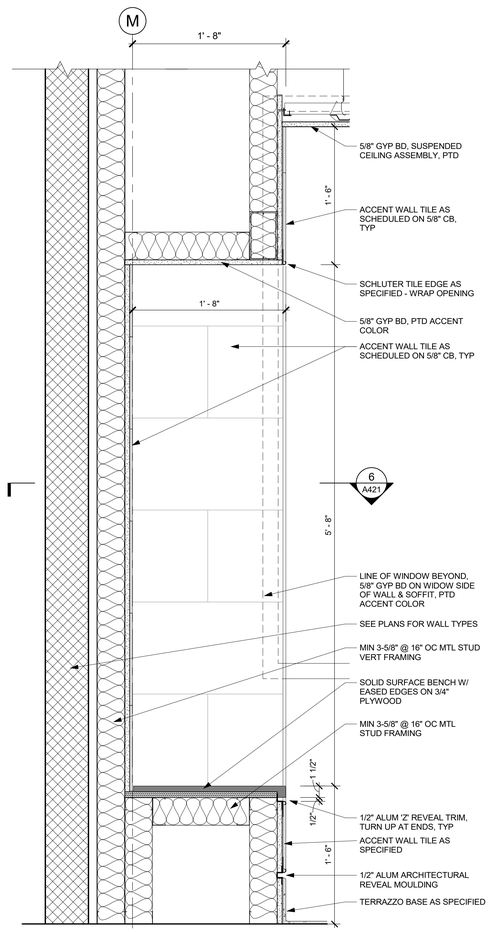

5 SECTION THRU CORRIDOR NOOK
1 1/2" = 1'-0"

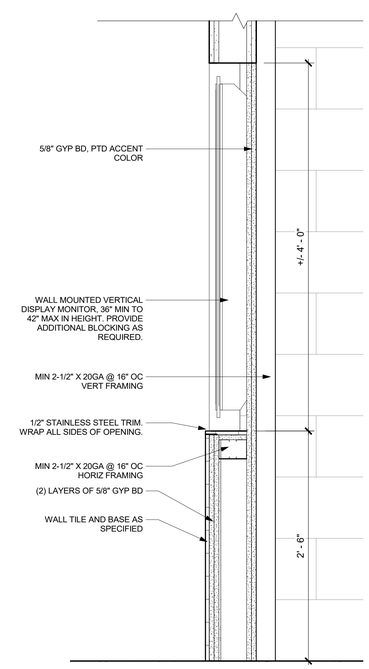

3 TYP SECTION THRU CORRIDOR AV
1 1/2" = 1'-0"

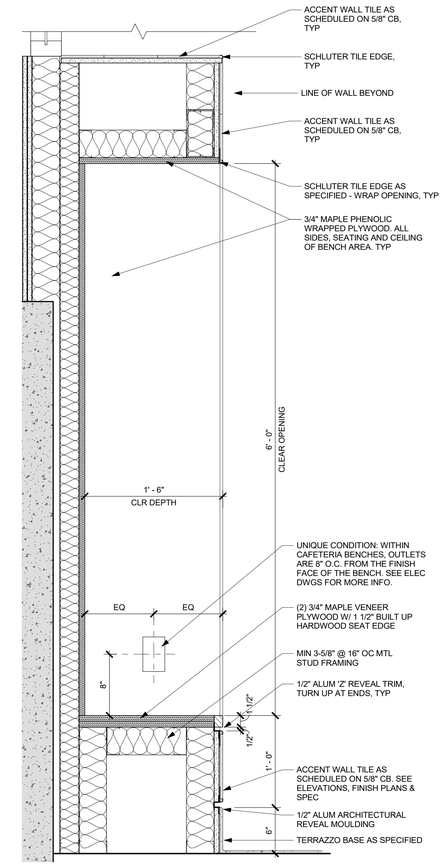

1 TYP SECTION THRU CAFETERIA BOOTH
1 1/2" = 1'-0"

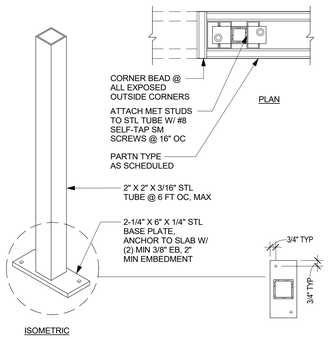

7 PARTIAL HT PARTN SUPPORT POST
1 1/2" = 1'-0"

NEW COMMUNITY SCHOOL 35 AT ST DENIS SITE

YONKERS JOINT SCHOOLS CONSTRUCTION BOARD

121 McLean Avenue
Yonkers, NY 10705

KG+D ARCHITECTS, PC
285 MAIN STREET • MOUNT KISCO, NEW YORK 10549
P:914.666.5900 KGDARCHITECTS.COM

NY SED PROJECT CONTROL NO.
66-23-00-01-0-346-001

CONSTRUCTION DOCUMENTS

NOTE:
ADD ALTERNATE - CASEWORK / MILLWORK / GYM EQUIPMENT. ITEMS WITHIN THIS ADD ALTERNATE ARE NOT PART OF BASE BID. REVIEW FURTHER INFORMATION IN SPEC.

Key Plan

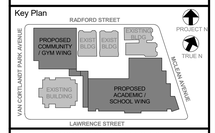

NOTE: ALL IDEAS, DESIGNS, ARRANGEMENTS AND PLANS INDICATED OR REPRESENTED BY THIS DRAWING ARE OWNED BY AND ARE THE PROPERTY OF KAEYER, GARMENT, & DAVIDSON ARCHITECTS, PC (KG&D), AND WERE CREATED FOR USE ON THIS PROJECT. NONE OF SUCH IDEAS, DESIGNS, ARRANGEMENTS OR PLANS SHALL BE USED BY OR DISCLOSED TO ANY PURPOSE WHATSOEVER WITHOUT THE WRITTEN PERMISSION OF KG&D.

WRITTEN DIMENSIONS ON THIS DRAWING SHALL HAVE PRECEDENCE OVER SCALED DIMENSIONS. CONTRACTOR SHALL VERIFY ALL ACTUAL DIMENSIONS AND CONDITIONS ON THE JOB AND THE ARCHITECT MUST BE NOTIFIED OF ANY VARIATIONS FROM DIMENSIONS AND CONDITIONS SHOWN. SHOP DETAILS MUST BE SUBMITTED TO THIS OFFICE FOR APPROVAL BEFORE PROCEEDING WITH FABRICATION.

ALTERATIONS BY ANY PERSON, IN ANY WAY, OF ANY ITEM CONTAINED ON THIS DOCUMENT, UNLESS ACTING UNDER THE DIRECTION OF THE LICENCED ARCHITECT WHOSE PROFESSIONAL SEAL IS AFFIXED HERETO, IS A VIOLATION OF TITLE VI, SECT. 69.5 (b) OF NEW YORK STATE LAW.
COPYRIGHT KAEYER, GARMENT, & DAVIDSON ARCHITECTS, PC
ALL RIGHTS RESERVED.

Professional Seal

No.	Date	Issue
5	11/01/2021	ISSUE FOR BID

Sheet Title

TYP. MILLWORK DETAILS & MISC INTERIOR DETAILS

Job No.	Date
2019-1026	11/01/2021
Scale	Drawn / Checked
AS NOTED	- -

Sheet Number

A421