Liberty Plaza Suites

500 Commerce Street
Hawthorne, NY
Town of Mount Pleasant
Westchester County
New York

OWNERS COPY
NEEDS TO BE ON SITE
AT ALL TIMES

ALL BUILDING PLANS/WORK
MUST COMPLY WITH 2020
BUILDING CODE OF NY STATE

NOTE: CLASSIFICATION/USE
PROVIDE: Lighted exit signs
Emergency Lights
Panic H rdware at all exits
Smoke detectors/alarm system
Underwriter Certificate
Wall to underslab at all corridors,
mixed occupancies, and assembly
Licensed Plumber to conduct all plumbing

FOOTINGS & PIERS
NOTE: PROVIDE FORMS FOR ALL FOOTINGS & PIERS. CALL FOR INSPECTION THE DAY BEFORE POUR. ALL WORK TO BE CONSISTENT WITH CODE COMPLIANCE.

PROJECT LOCATION

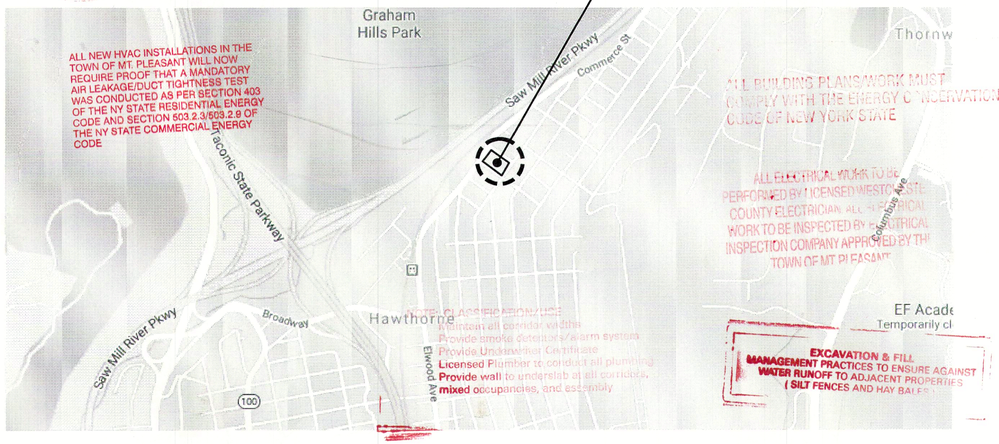

LOCATION MAP

N.T.S.

A.D.A.
Provide Handicapped Facilities
and Considerations as applied
by the American Disabilities Act

A.D.A.
Provide Handicapped Facilities
and Considerations as applied
by the American Disabilities Act

500 COMMERCE STREET - RENDERING

A.D.A.
Provide Handicapped Facilities
and Considerations as applied
by the American Disabilities Act

DRAWING INDEX

CIVIL

C-000	COVER SHEET
C-010	EXISTING CONDITIONS
C-100	LAYOUT PLAN
C-200	GRADING PLAN
C-300	UTILITIES PLAN
C-400	EROSION AND SEDIMENT CONTROL PLAN
C-900	CONSTRUCTION DETAILS
C-901	CONSTRUCTION DETAILS
C-902	CONSTRUCTION DETAILS
C-903	CONSTRUCTION DETAILS
C-904	CONSTRUCTION DETAILS
C-905	CONSTRUCTION DETAILS
C-906	CONSTRUCTION DETAILS
L-100	LANDSCAPING PLAN
L-200	LIGHTING PLAN

HIGHWAY PLAN

HP-1	COVER SHEET
HP-2	LAYOUT PLAN PHASE 1
HP-2A	LAYOUT PLAN PHASE 2
HP-3	SIGN, STRIPING, & LANDSCAPING PLAN
HP-4	GRADING & UTILITIES PLAN
HP-5	EROSION AND SEDIMENT CONTROL PLAN
HP-6	WORK ZONE TRAFFIC CONTROL PLAN
HP-7	CONSTRUCTION DETAILS
HP-8	CONSTRUCTION DETAILS
HP-9	CONSTRUCTION DETAILS
HP-10	CONSTRUCTION DETAILS

ARCHITECTURAL

G-001	SITE PLAN, SYMBOLS, ABBREVIATIONS & GENERAL NOTES
SPEC	SPECIFICATION BOOK UNDER SEPARATE COVER
A-001	CODE ANALYSIS
A-002	AMERICANS WITH DISABILITIES ACT NATIONAL STANDARD GUIDELINES
A-101	FIRST FLOOR (GARAGE LEVEL) CONSTRUCTION PLAN AND NOTES
A-102	SECOND FLOOR CONSTRUCTION PLAN
A-103	THIRD FLOOR CONSTRUCTION PLAN
A-104	FOURTH LEVEL ROOF PLAN & ROOF PLAN
A-105	APT. UNIT ENLARGED CONSTRUCTION PLANS & DR. SCHEDULE (UNITS 2G, 2H, 3G & 3H)
A-106	APT. UNIT ENLARGED CONSTRUCTION PLANS & DR. SCHEDULE (UNITS 2A, 2B, 2C, 2D, 2E, 2F, & 3A, 3B, 3C, 3D, 3E, 3F)
A-151	FIRST FLOOR (GARAGE LEVEL) REFLECTED CEILING PLAN
A-152	SECOND FLOOR & THIRD FLOOR REFLECTED CEILING PLANS
A-153	TYPICAL APT. UNIT REFLECTED CEILING PLAN
A-171	FIRST FLOOR (GARAGE LEVEL) FINISH PLAN & SCHEDULES
A-172	SECOND FLOOR & THIRD FLOOR FINISH PLANS
A-173	TYPICAL APT. UNIT FINISH PLAN
A-200	EXTERIOR ELEVATIONS
A-300	BUILDING SECTIONS
A-350	WALL DETAILS
A-351	WALL DETAILS
A-500	STAIR 'A' PLANS AND SECTION
A-501	STAIR 'B' PLANS AND SECTION
A-502	STAIR DETAILS
A-503	ELEVATOR PLANS & SECTION
A-504	ELEVATOR NOTES
A-800	PARTITION TYPES
A-801	MISC. DETAILS
A-802	RCP DETAILS
A-850	ROOF DETAILS
A-851	ROOF DETAILS
A-900	DOOR SCHEDULE
A-901	DOOR DETAILS
A-910	WINDOW SCHEDULES AND DETAILS

STRUCTURAL

S-001	STRUCTURAL GENERAL NOTES
S-002	STRUCTURAL FOUNDATION PLAN
S-003	STRUCTURAL RETAINING WALL SECTIONS
S-004	STRUCTURAL FOOTINGS AND WALL DETAILS
S-005	STRUCTURAL SECOND FLOOR PLAN
S-006	STRUCTURAL THIRD FLOOR PLAN
S-007	STRUCTURAL ROOF FLOOR PLAN
S-008	STRUCTURAL STAIRS & ELEVATOR ROOF FLOOR PLAN
S-009	STRUCTURAL ELEVATIONS FRAME C & D
S-010	STRUCTURAL ELEVATIONS FRAMES A & B
S-011	STRUCTURAL ELEVATION FRAME 3,5,7 & 9
S-012	STRUCTURAL DETAILS AND SCHEDULE
S-013	STRUCTURAL DETAILS
S-014	STRUCTURAL DETAILS
S-015	STRUCTURAL DETAILS
S-016	STRUCTURAL SECTIONS
S-017	STRUCTURAL SECTIONS
S-018	GABLE ROOF FRAMING
S-019	PERGOLA DETAIL

MECHANICAL

M0.1	MECHANICAL SYMBOLS ABBREVIATIONS AND GENERAL NOTES
M0.2	MECHANICAL SPECIFICATIONS 1 OF 2
M0.3	MECHANICAL SPECIFICATIONS 2 OF 2
M2.1	MECHANICAL FIRST FLOOR NEW WORK PLAN
M2.2	MECHANICAL SECOND FLOOR NEW WORK PLAN
M2.3	MECHANICAL THIRD FLOOR NEW WORK PLAN
M2.4	MECHANICAL FOURTH FLOOR NEW WORK PLAN
M2.5	MECHANICAL ROOF NEW WORK PLAN
M4.1	MECHANICAL TYPICAL APARTMENT TYPE PLANS
M6.1	MECHANICAL SCHEDULES
M7.1	MECHANICAL DETAILS 1 OF 2
M7.2	MECHANICAL DETAILS 2 OF 2

ELECTRICAL

E0.1	ELECTRICAL SYMBOLS, ABBREVIATIONS AND GENERAL NOTES
E0.2	ELECTRICAL NOTES AND SPECIFICATIONS
E0.3	ELECTRICAL SPECIFICATIONS
E1.1	ELECTRICAL SITE PLAN
E1.2	ELECTRICAL SITE LIGHTING PLAN
E2.1	ELECTRICAL FIRST FLOOR LIGHTING AND POWER PLAN
E2.2	ELECTRICAL SECOND FLOOR LIGHTING AND POWER PLAN
E2.3	ELECTRICAL THIRD FLOOR LIGHTING AND POWER PLAN
E2.4	ELECTRICAL FOURTH FLOOR LIGHTING AND POWER PLAN
E2.5	ELECTRICAL ROOF POWER PLAN
E4.1	TYPICAL APARTMENT TYPE PLANS
E5.1	ELECTRICAL ONE-LINE DIAGRAM
E6.1	ELECTRICAL SCHEDULES
E6.2	ELECTRICAL SCHEDULES
E7.1	ELECTRICAL DETAILS
E7.2	ELECTRICAL DETAILS

FIRE ALARM

FA0.1	FIRE ALARM ABBREVIATIONS AND GENERAL NOTES
FA1.0	FIRE ALARM RISER DIAGRAM
FA1.1	FIRE ALARM FIRST FLOOR PLAN
FA1.2	FIRE ALARM SECOND FLOOR PLAN
FA1.3	FIRE ALARM THIRD FLOOR PLAN
FA1.4	FIRE ALARM FOURTH FLOOR PLAN
FA1.5	FIRE ALARM ROOF PLAN

FIRE PROTECTION

SP0.1	SPRINKLER SYMBOLS ABBREVIATIONS, GENERAL NOTES AND SPECIFICATIONS
SP0.2	SPRINKLER SPECIFICATIONS
SP2.1	SPRINKLER FIRST FLOOR NEW WORK PLAN
SP2.2	SPRINKLER SECOND FLOOR NEW WORK PLAN
SP2.3	SPRINKLER THIRD FLOOR NEW WORK PLAN
SP2.4	SPRINKLER FOURTH FLOOR NEW WORK PLAN
SP4.1	SPRINKLER TYPICAL APARTMENT TYPE PLANS
SP7.1	SPRINKLER DETAILS 1 OF 3
SP7.2	SPRINKLER DETAILS 2 OF 3
SP7.3	SPRINKLER DETAILS 3 OF 3

PLUMBING

P0.1	PLUMBING SYMBOLS ABBREVIATIONS, GENERAL NOTES AND SCHEDULES
P0.2	PLUMBING SPECIFICATIONS 1 OF 2
P0.3	PLUMBING SPECIFICATIONS 2 OF 2
P2.0	PLUMBING UNDERSLAB NEW WORK PLAN
P2.1	PLUMBING FIRST FLOOR NEW WORK PLAN
P2.2	PLUMBING SECOND FLOOR NEW WORK PLAN
P2.3	PLUMBING THIRD FLOOR NEW WORK PLAN
P2.4	PLUMBING FOURTH FLOOR NEW WORK PLAN
P2.5	PLUMBING ROOF NEW WORK PLAN
P5.1	PLUMBING SANITARY RISER DIAGRAMS 1 OF 2
P5.2	PLUMBING SANITARY RISER DIAGRAMS 2 OF 2
P5.3	PLUMBING DOMESTIC RISER DIAGRAMS 1 OF 2
P5.4	PLUMBING DOMESTIC RISER DIAGRAMS 2 OF 2
P5.5	PLUMBING STORM AND RISER DIAGRAMS
P7.1	PLUMBING DETAILS 1 OF 2
P7.2	PLUMBING DETAILS 2 OF 2

LIBERTY PLAZA SUITES
500 COMMERCE STREET
HAWTHORNE, NY 10532

ARCHITECT
dimovski architecture p.l.l.c.
59 Kensico Road, Thornwood, NY 10594
(914) 747-3500 | (914) 747-3588 fax
www.dimovskiarchitecture.com

STRUCTURAL ENGINEER
CHARLES A. MANGANARO
CONSULTING ENGINEERS
A PROFESSIONAL CORPORATION
303 SOUTH BROADWAY, SUITE 223, TARRYTOWN, NY 10591-5488
SHAILESH R. NAIK, P.E.
NEW YORK LICENSE No. 072797-1

MEP ENGINEER
CLA Consulting Engineers
50 Broadway
Hawthorne, NY 10532
914.747.2950
9 West 38th Street,
Suite 501
New York, NY 10018
646.849.4110
clace.com

NO.	REVISION/ISSUE	DATE
3	ISSUE FOR DOB COMMENT ⚠1	04/26/2021
2	ISSUE FOR PRICING	03/16/2021
1	ISSUE FOR PERMIT	03/12/2021

SEAL
REGISTERED ARCHITECT
PAULETTE DIMOVSKI
032361
STATE OF NEW YORK

PROJECT
LIBERTY PLAZA SUITES
500 COMMERCE ST.
TOWN OF MT. PLEASANT, NY

DATE:	AUGUST 12, 2020
PROJECT NO:	DA 2034
DRAWN BY:	YK
CHECKED BY:	PD/SGD
SCALE:	AS NOTED

DRAWING TITLE
COVER SHEET

SHEET NO.
T-001

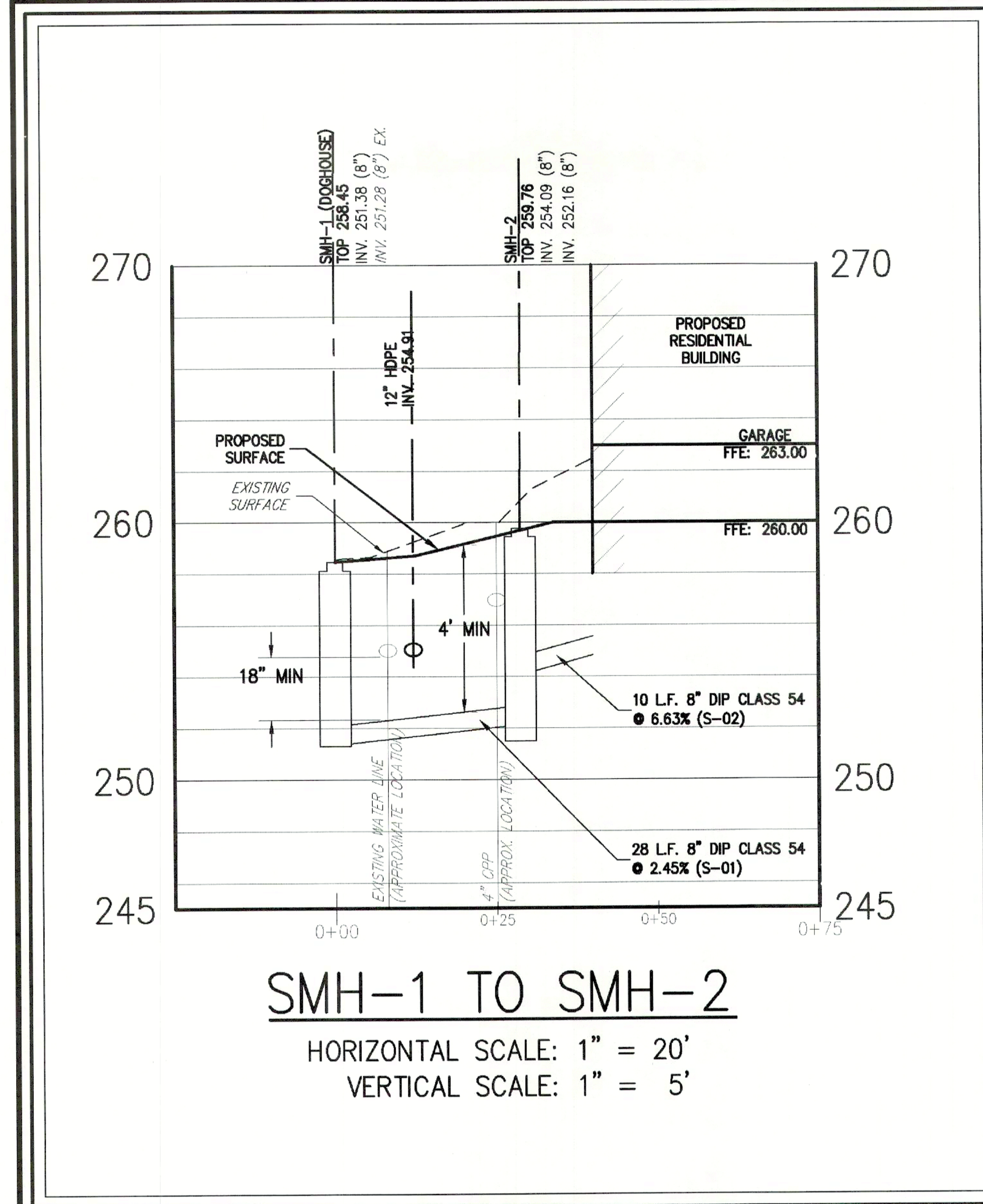

SMH-1 TO SMH-2

HORIZONTAL SCALE: 1" = 20'
VERTICAL SCALE: 1" = 5'

SANITARY TESTING NOTES:

1. UPON COMPLETION AND PRIOR TO THE USE OF THE PROPOSED SEWER MAIN. TWO (2) SETS OF AS-BUILT PLANS (WITH PROFILES), AIR TESTS OR VACUUM TEST RESULTS SHALL BE SUBMITTED ALONG WITH THE DESIGN PROFESSIONAL'S CERTIFICATE OF CONSTRUCTION COMPLIANCE LETTER TO WCDOH AND PERMISSION FROM THE HEALTH DEPARTMENT MUST BE OBTAINED PRIOR TO PUTTING THE SYSTEM INTO SERVICE.
2. FOR EXFILTRATION/INFILTRATION TEST: LEAKAGE SHALL NOT EXCEED 100 GALLONS PER INCH OF PIPE DIAMETER PER MILE PER DAY. WATER TESTS SHALL BE PERFORMED UNDER A MINIMUM POSITIVE HEAD OF TWO (2) FEET (FIVE (5) FEET FOR WCDEF SEWERS). LOW PRESSURE AIR TESTING IS PERMITTED FOR PIPE LINE AND SHOULD CONFORM TO ASTM C-828. VACUUM TESTING IS PERMITTED FOR MANHOLES BUT IS NOT PERMISSIBLE FOR PIPELINES.
3. SANITARY SEWER PIPE SHALL BE TESTED IN ACCORDANCE WITH ASTM STANDARDS F-1417 AND SEWER MANHOLES IN ACCORDANCE WITH ASTM STANDARDS C-1244.
4. THE WCDOH MUST BE NOTIFIED, IN WRITING, 48 HOURS IN ADVANCE BEFORE ANY TESTING IS DONE ON THE SEWER MAINS AND MANHOLES.

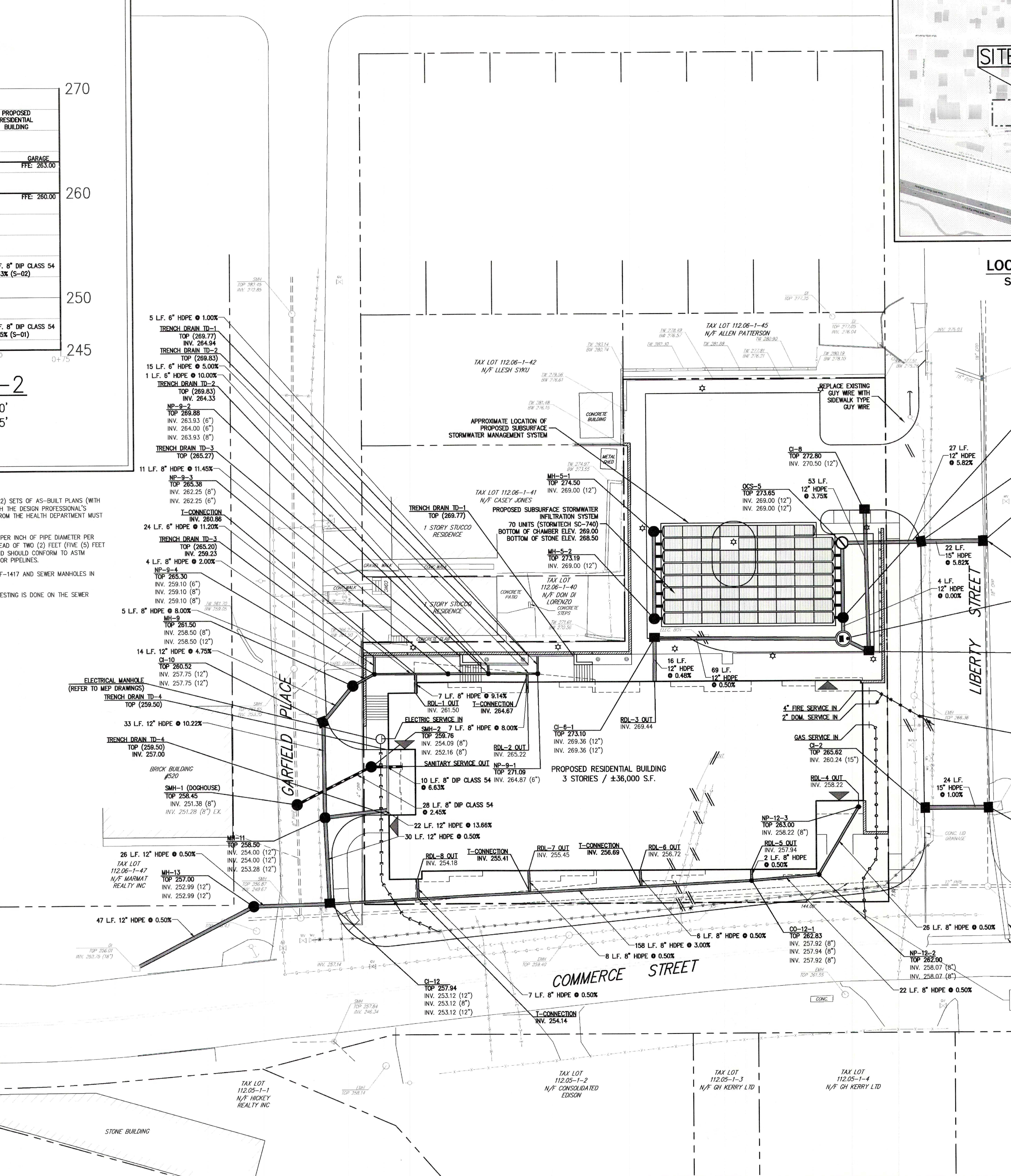

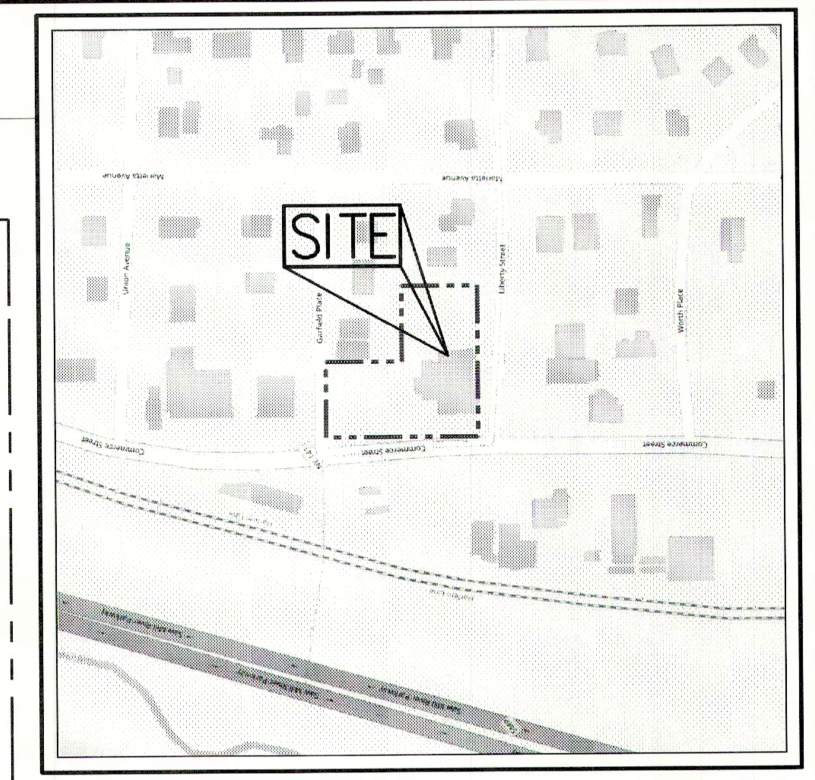

LOCATION MAP
SCALE: 1" = 200'

LEGEND

- EXISTING PROPERTY LINE
- ADJACENT PROPERTY LINE
- EXISTING EASEMENT LINE
- EXISTING BUILDING OVERHANG
- EXISTING BUILDING LINE
- EXISTING PAVEMENT EDGE
- EXISTING CURB LINE
- EXISTING STONE WALL
- EXISTING RETAINING WALL
- EXISTING FENCE
- EXISTING STORM DRAIN LINE AND SIZE
- EXISTING SANITARY LINE AND SIZE
- EXISTING WATER LINE
- EXISTING GAS LINE
- EXISTING OVERHEAD WIRES
- EXISTING DRAIN INLET
- EXISTING MANHOLE
- EXISTING FIRE HYDRANT
- EXISTING GAS VALVE
- EXISTING WATER VALVE
- EXISTING UTILITY POLE
- EXISTING LIGHT POLE
- EXISTING SIGN
- PROPOSED BUILDING LINE
- PROPOSED CONCRETE CURB
- PROPOSED CONCRETE SIDEWALK
- SMH PROPOSED SANITARY SEWER MANHOLE
- MH PROPOSED STORM DRAIN MANHOLE
- CI PROPOSED TYPE CI DRAIN INLET
- DI PROPOSED TYPE DI DRAIN INLET
- LI PROPOSED TYPE LI DRAIN LAWN INLET
- OCS PROPOSED OUTLET CONTROL STRUCTURE
- WQS PROPOSED WATER QUALITY STRUCTURE
- PROPOSED HYDRANT
- 15" HDPE PROPOSED STORM DRAIN LINE & SIZE
- 8" PVC PROPOSED SANITARY SEWER LINE & SIZE
- 6" WATER PROPOSED WATER LINE & SIZE
- PROPOSED GAS LINE
- PROPOSED WATER VALVE
- PROPOSED GAS VALVE
- PROPOSED RETAINING WALL (DESIGN BY OTHERS)
- PROPOSED UTILITY POLE
- TO BE REMOVED

NOTES:

1. EXISTING CONDITIONS DEPICTED ON THIS PLAN HAVE BEEN TAKEN FROM SURVEY TITLED, "TOPOGRAPHY OF PROPERTY PREPARED FOR 500 COMMERCE LLC," PREPARED BY TC MERRITS LAND SURVEYORS, DATED 11/10/2017, REVISED 05/13/2019 TO SHOW ADDITIONAL TOPOGRAPHY AND UTILITIES.
2. ALL STORMWATER MANAGEMENT PRACTICES SHALL REMAIN UNDISTURBED AND BE PROTECTED FROM HEAVY MACHINERY TRAFFIC DURING CONSTRUCTION. HOWEVER DURING CONSTRUCTION OF THE PRACTICE THE CONTRACTOR SHALL MINIMIZE AND AVOID HEAVY MACHINERY TRAFFIC TO THE MAXIMUM EXTENT PRACTICABLE. THERE SHALL BE NO STORAGE OF MATERIALS WITHIN AREAS TO BE USED FOR STORMWATER MANAGEMENT PRACTICES. THE CONTRACTOR SHALL INSTALL CONSTRUCTION FENCE AROUND THE PRACTICE TO DISCOURAGE VEHICLE TRAFFIC.
3. UNLESS OTHERWISE SPECIFIED, PIPE FOR STORM DRAINS SHALL BE HIGH DENSITY POLYETHYLENE PIPE (HDPE) WITH A SMOOTH INTERIOR AND ANNULAR EXTERIOR CORRUGATIONS IN ACCORDANCE WITH ASTM F-2648. JOINTS SHALL BE WATERTIGHT IN ACCORDANCE WITH ASTM D-3212.
4. UNLESS OTHERWISE SPECIFIED, PIPE FOR SANITARY SEWER GRAVITY LINES SHALL BE POLYVINYL CHLORIDE PIPE (PVCP), SDR-35, WITH PUSH-ON JOINTS IN ACCORDANCE WITH ASTM D-3034 AND D-3212.
5. UNLESS OTHERWISE SPECIFIED, PIPE FOR WATER LINES SHALL BE DOUBLE CEMENT-LINED DUCTILE IRON PIPE (DIP), CLASS 54 WITH PUSH-ON JOINTS IN ACCORDANCE WITH AWWA C-150, C-151, C-104 AND C-111.
6. ELECTRIC, TELEPHONE, AND TELEVISION LINES SHALL BE INSTALLED UNDERGROUND IN CONDUIT IN ACCORDANCE WITH THE REQUIREMENTS OF THE UTILITY COMPANY HAVING JURISDICTION.

BORING	GROUND ELEVATION	DEPTH TO BEDROCK	GROUNDWATER DEPTH
B-1	±276	NOT ENCOUNTERED	NOT ENCOUNTERED
B-2	±273	20 (E. ±253)	19 (EL. ±254)
B-3	±266	NOT ENCOUNTERED	20 (EL. ±246)
B-4	±263	32 (EL. ±231)	25 (EL.±238)
B-5/5A	±266.5	34 (EL. ±232.5)	25 (EL. ±241.5)
B-6	±266	NOT ENCOUNTERED	18.67 (EL. ±247.33)

ANY ALTERATION OF PLANS, SPECIFICATIONS, PLATS AND REPORTS BEARING THE SEAL OF A LICENSED PROFESSIONAL ENGINEER OR LICENSED LAND SURVEYOR IS A VIOLATION OF SECTION 7209 OF THE NEW YORK STATE EDUCATION LAW, EXCEPT AS PROVIDED FOR BY SECTION 7209, SUBSECTION 2.

No.	Revision	Date	By
3.	REVISED PER TOWN ENGINEER COMMENTS	12/13/2019	TK
4.	REVISED PER TOWN ENGINEER COMMENTS	12/30/2019	JJ
5.	WCDOH SUBMISSION	01/06/2020	JR
6.	WCDOH SUBMISSION	08/03/2020	JJ
7.	RESPONSE TO WCDOH COMMENTS	10/06/2020	JR
8.	TOWN HIGHWAY DEPARTMENT SUBMISSION	12/15/2020	JJ
9.	ISSUED FOR BUILDING PERMIT	03/12/2021	JJ
	Previous Editions Obsolete		

APPLICANT/OWNER:
500 COMMERCE LLC
3 WEST STEVENS AVENUE
HAWTHORNE, NY 10532

ARCHITECT:
DIMOVSKI ARCHITECTURE PLLC
59 KENSICO ROAD
THORNWOOD, NY 10594

JMC Planning, Engineering, Landscape Architecture & Land Surveying, PLLC
JMC Site Development Consultants, LLC
John Meyer Consulting, Inc.
120 BEDFORD ROAD • ARMONK, NY 10504
voice 914.273.5225 • fax 914.273.2102
www.jmcpllc.com

UTILITIES PLAN

500 COMMERCE STREET REDEVELOPMENT
500 COMMERCE STREET
HAWTHORNE, NY 10532

Drawn: JJ Approved: RA
Scale: 1" = 20'
Date: 06/06/2019
Project No: 18158
18158-SITE | C-300 | UTIL.scr
Drawing No: C-300

NOT FOR CONSTRUCTION

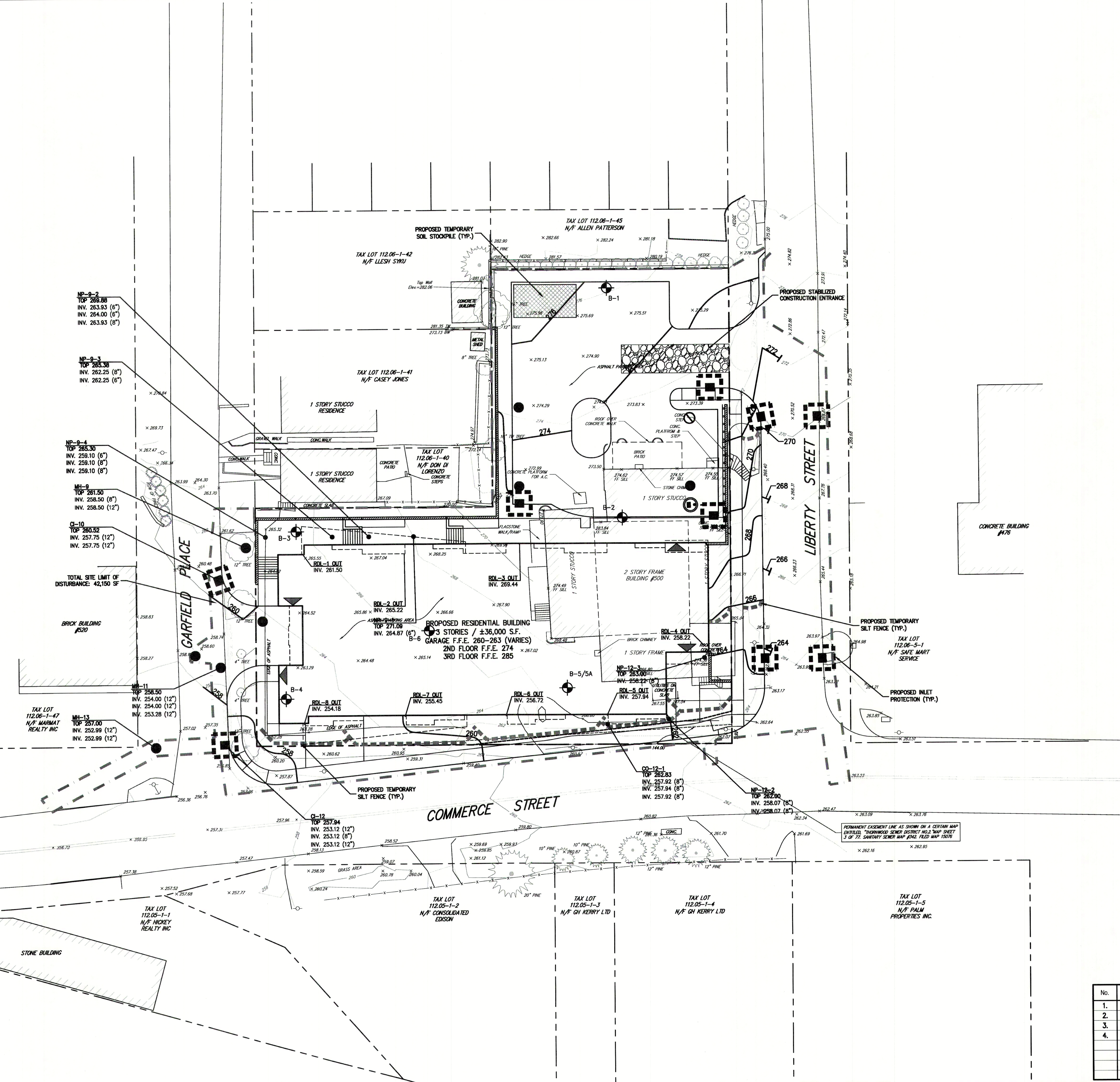

LEGEND

Symbol	Description
	PROPOSED INLET PROTECTION
	PROPOSED CONSTRUCTION FENCE
	PROPOSED SILT FENCE
	PROPOSED LIMIT OF DISTURBANCE
	PROPOSED STABILIZED CONSTRUCTION ENTRANCE
	PROPOSED STOCKPILE AREA
	PROPOSED TEMPORARY SWALE
	PROPOSED TEMPORARY SEDIMENT BASIN
	TEMPORARY RISER & ANTI-VORTEX DEVICE
	EXISTING FEATURE TO BE REMOVED

NOTES:

1. EXISTING CONDITIONS DEPICTED ON THIS PLAN HAVE BEEN TAKEN FROM SURVEY TITLED, "TOPOGRAPHY OF PROPERTY PREPARED FOR 500 COMMERCE LLC," PREPARED BY TC MERRITS LAND SURVEYORS, DATED 11/10/2017.
2. THIS PLAN IS FOR TEMPORARY EROSION AND SEDIMENT CONTROL INFORMATION ONLY.
3. PRIOR TO BEGINNING ANY CLEARING, GRUBBING OR EXCAVATION, ALL EROSION AND SEDIMENT CONTROL MEASURES SHALL BE INSTALLED IN ACCORDANCE WITH ALL THE PLANS AND SPECIFICATIONS. EROSION AND SEDIMENT CONTROL MEASURES SHALL BE MAINTAINED UNTIL THE SITE IS STABILIZED. FINAL STABILIZATION OF LANDSCAPED AREAS SHALL BE IN ACCORDANCE WITH THE LANDSCAPE PLAN.
4. THE CONTRACTOR SHALL INSPECT AND MAINTAIN ON-SITE EROSION AND SEDIMENT CONTROL MEASURES ON A DAILY BASIS. ALL COLLECTED SEDIMENT WITHIN SEDIMENT BARRIERS SHALL BE REMOVED PERIODICALLY AS REQUIRED TO MAINTAIN THE FUNCTION OF THE SEDIMENT BARRIERS. ALL SEDIMENT COLLECTED SHALL BE RESPREAD ON-SITE WITHIN STABILIZED AREAS AS DIRECTED BY THE OWNERS REPRESENTATIVE.
5. THE CONTRACTOR SHALL INSPECT DOWNSTREAM CONDITIONS FOR EVIDENCE OF SEDIMENTATION ON A WEEKLY BASIS, AFTER EACH RAINSTORM, AND AS MAY BE REQUIRED OR DIRECTED BY ALL APPLICABLE APPROVALS AND PERMITS. THE CONTRACTOR SHALL IMMEDIATELY PROVIDE A WRITTEN REPORT ON FINDINGS OF SEDIMENT IN DOWNSTREAM AREAS TO ALL AUTHORITIES HAVING JURISDICTION AND MAKE REPAIRS AS REQUIRED OR DIRECTED.
6. ADDITIONAL EROSION AND SEDIMENT CONTROL MEASURES SHALL BE INSTALLED BY THE CONTRACTOR AS REQUIRED/WARRANTED BY FIELD CONDITIONS AND AS DIRECTED BY THE OWNERS REPRESENTATIVE, JMC, AND/OR ANY AUTHORITY HAVING JURISDICTION.
7. STOCKPILING OF CONSTRUCTION MATERIAL SHALL BE PLACED ON-SITE IN THE AREA DESIGNATED ON THIS PLAN OR AS APPROVED BY THE OWNERS REPRESENTATIVE. STOCKPILED EXCAVATED MATERIAL SHALL HAVE TWO ROWS OF SILT FENCE LOCATED AROUND ITS PERIMETER. ALL STOCKPILED MATERIAL SHALL BE MAINTAINED IN AN ORDERLY MANNER SO AS NOT TO IMPEDE ON PEDESTRIAN AND/OR VEHICULAR TRAFFIC CIRCULATION ROUTES.
7. DUST SHALL BE CONTROLLED BY SPRINKLING OR OTHER APPROVED METHODS AS NECESSARY, OR AS DIRECTED BY THE OWNERS REPRESENTATIVE.
8. ALL STORMWATER MANAGEMENT PRACTICES SHALL REMAIN UNDISTURBED AND BE PROTECTED FROM HEAVY MACHINERY TRAFFIC DURING CONSTRUCTION. HOWEVER DURING CONSTRUCTION OF THE PRACTICE THE CONTRACTOR SHALL MINIMIZE AND AVOID HEAVY MACHINERY TRAFFIC TO THE MAXIMUM EXTENT PRACTICABLE. THERE SHALL BE NO STORAGE OF MATERIALS WITHIN AREAS TO BE USED FOR STORMWATER MANAGEMENT PRACTICES. THE CONTRACTOR SHALL INSTALL CONSTRUCTION FENCE AROUND THE PRACTICE TO DISCOURAGE VEHICLE TRAFFIC.

APPLICANT/OWNER:
500 COMMERCE LLC
3 WEST STEVENS AVENUE
HAWTHORNE, NY 10532

ARCHITECT:
DIMOVSKI ARCHITECTURE PLLC
59 KENSICO ROAD
THORNWOOD, NY 10594

JMC Planning, Engineering, Landscape Architecture & Land Surveying, PLLC
JMC Site Development Consultants, LLC
John Meyer Consulting, Inc.
120 BEDFORD ROAD · ARMONK, NY 10504
voice 914.273.5225 · fax 914.273.2102
www.jmcpllc.com

EROSION AND SEDIMENT CONTROL PLAN

500 COMMERCE STREET REDEVELOPMENT
500 COMMERCE STREET
HAWTHORNE, NY 10532

ANY ALTERATION OF PLANS, SPECIFICATIONS, PLATS AND REPORTS BEARING THE SEAL OF A LICENSED PROFESSIONAL ENGINEER OR LICENSED LAND SURVEYOR IS A VIOLATION OF SECTION 7209 OF THE NEW YORK STATE EDUCATION LAW, EXCEPT AS PROVIDED FOR BY SECTION 7209, SUBSECTION 2.

STATE OF NEW YORK · ROBERT AIELLO · LICENSED PROFESSIONAL ENGINEER · 078390

No.	Revision	Date	By
1.	REVISED PER TOWN ENGINEER COMMENTS	10/01/2019	TK
2.	REVISED PER TOWN ENGINEER COMMENTS	12/13/2019	TK
3.	TOWN HIGHWAY DEPARTMENT SUBMISSION	12/15/2020	JJ
4.	ISSUED FOR BUILDING PERMIT	03/12/2021	JJ
	Previous Editions Obsolete		

Drawn: JJ	Approved: RA	
Scale: 1" = 20'		
Date: 10/01/2019		
Project No: 18158		
18158-SITE	C-400	S&E.scr
Drawing No: C-400		

NOT FOR CONSTRUCTION

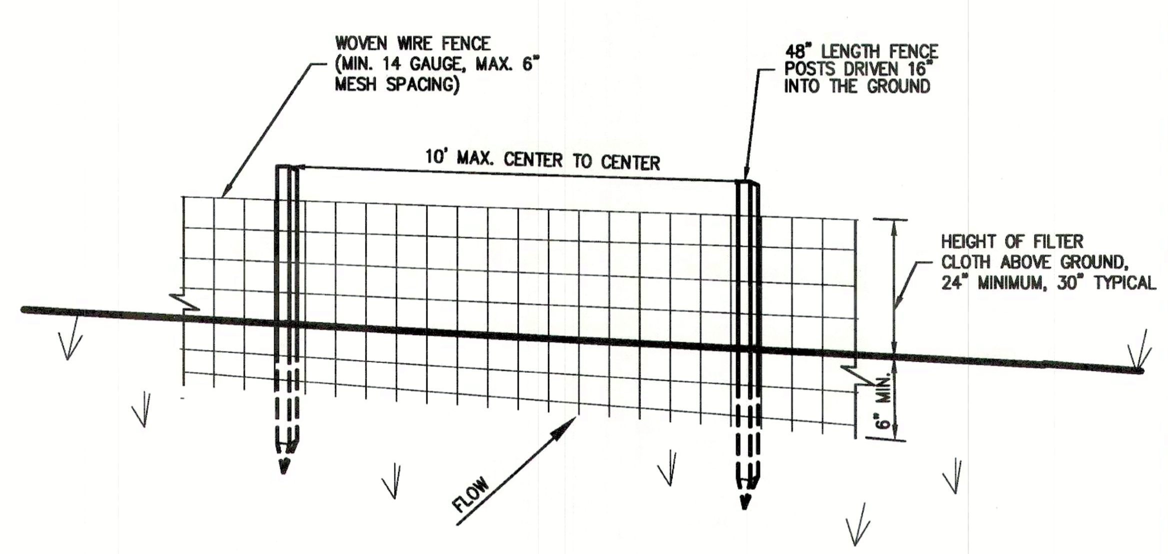

PERSPECTIVE VIEW

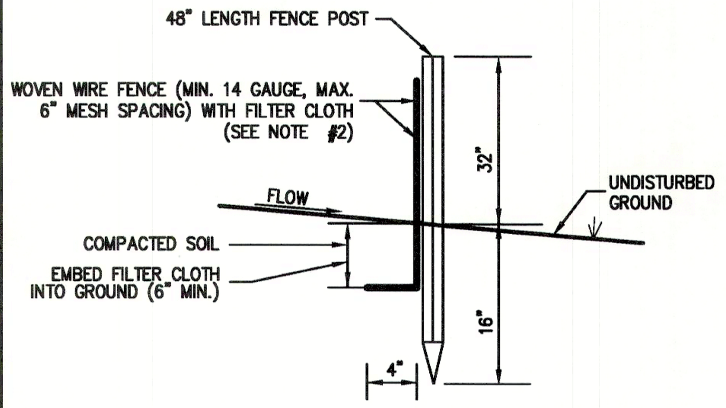

SECTION

SLOPE	STEEPNESS	SLOPE LENGTH/FENCE LENGTH (FT.)
2–10%	50:1 TO 10:1	250/2000
10–20%	10:1 TO 5:1	150/1000
20–33%	5:1 TO 3:1	80/750
33–50%	3:1 TO 2:1	70/350
>50%	>2:1	30/175

*ALL SILT FENCES SHALL BE PLACED AS CLOSE TO THE DISTURBED AREA AS POSSIBLE, BUT AT LEAST 10 FEET FROM THE TOE OF A SLOPE STEEPER THAN 3H:1V, TO ALLOW FOR MAINTENANCE AND ROLL DOWN. THE AREA BEYOND THE FENCE MUST BE UNDISTURBED OR STABILIZED.

NOTES:

1. WOVEN WIRE FENCE SHALL BE FASTENED SECURELY TO FENCE POSTS WITH WIRE TIES OR STAPLES. POSTS SHALL BE STEEL, EITHER T OR U TYPE OR HARDWOOD.
2. FILTER CLOTH SHALL BE FASTENED SECURELY TO WOVEN WIRE FENCE WITH TIES SPACED EVERY 24" AT TOP AND MID SECTION. FENCE SHALL BE WOVEN WIRE, 6" MAXIMUM MESH OPENING.
3. WHEN TWO SECTIONS OF FILTER CLOTH ADJOIN EACH OTHER, THEY SHALL BE OVERLAPPED BY SIX INCHES AND FOLDED. FILTER CLOTH SHALL BE EITHER FILTER X, MIRAFI 100X, STABLINKA T140N, OR APPROVED EQUAL.
4. PREFABRICATED UNITS SHALL BE GEOFAB, ENVIROFENCE, OR APPROVED EQUAL.
5. MAINTENANCE SHALL BE PERFORMED AS NEEDED AND MATERIAL REMOVED AND REPLACED WHEN "BULGES" DEVELOP IN THE SILT FENCE.

SILT FENCE — 1

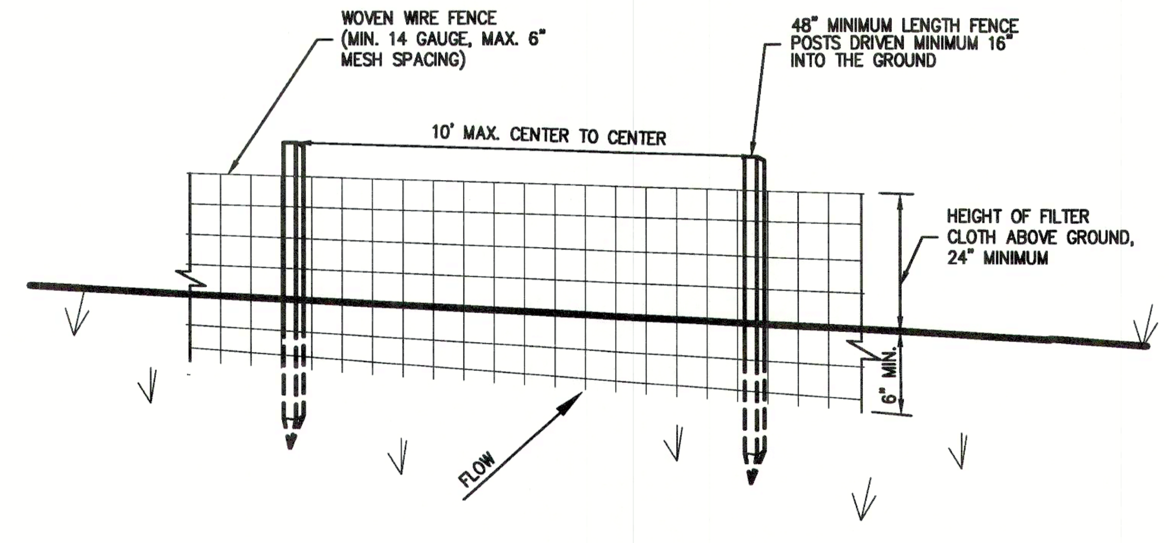

PERSPECTIVE VIEW

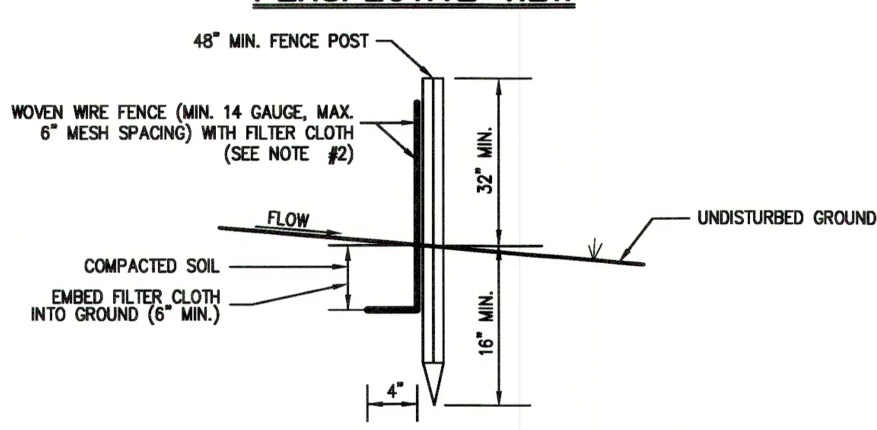

SECTION

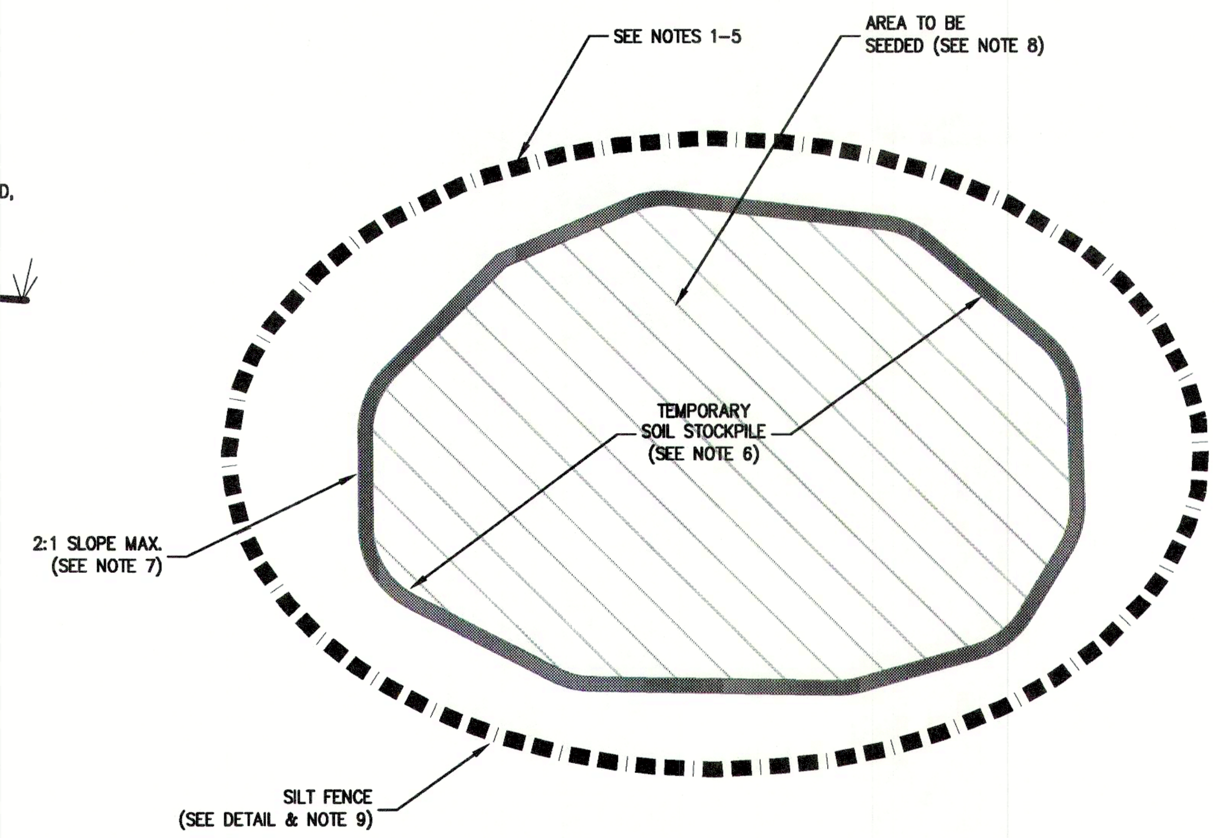

PLAN VIEW

NOTES:

1. WOVEN WIRE FENCE SHALL BE FASTENED SECURELY TO FENCE POSTS WITH WIRE TIES OR STAPLES. POSTS SHALL BE STEEL, EITHER T OR U TYPE OR HARDWOOD.
2. FILTER CLOTH SHALL BE FASTENED SECURELY TO WOVEN WIRE FENCE WITH TIES SPACED EVERY 24" AT TOP AND MID SECTION. FENCE SHALL BE WOVEN WIRE, 6" MAXIMUM MESH OPENING.
3. WHEN TWO SECTIONS OF FILTER CLOTH ADJOIN EACH OTHER, THEY SHALL BE OVERLAPPED BY SIX INCHES AND FOLDED. FILTER CLOTH SHALL BE EITHER FILTER X, MIRAFI 100X, STABLINKA T140N, OR APPROVED EQUAL.
4. PREFABRICATED UNITS SHALL BE GEOFAB, ENVIROFENCE, OR APPROVED EQUAL.
5. MAINTENANCE SHALL BE PERFORMED AS NEEDED AND MATERIAL REMOVED AND REPLACED WHEN "BULGES" DEVELOP IN THE SILT FENCE.
6. THE AREA CHOSEN FOR ALL TEMPORARY SOIL STOCKPILES SHALL BE DRY AND STABLE.
7. ALL STOCKPILED SOIL SHALL NOT CONTAIN SLOPES GREATER THAN 2:1.
8. UPON COMPLETION OF SOIL STOCKPILING, EACH PILE SHALL BE SEEDED WITHIN 24 HOURS. PERENNIAL OR ANNUAL RYEGRASS SHALL BE PLANTED DURING SPRING, SUMMER OR EARLY FALL. WINTER RYE (CEREAL RYE) SHALL BE PLANTED DURING LATE FALL OR EARLY WINTER.
9. ALL STOCKPILES SHALL BE PROTECTED WITH SILT FENCING INSTALLED AROUND THE PERIMETER.

TEMPORARY SOIL STOCKPILE WITH SILT FENCE — 2

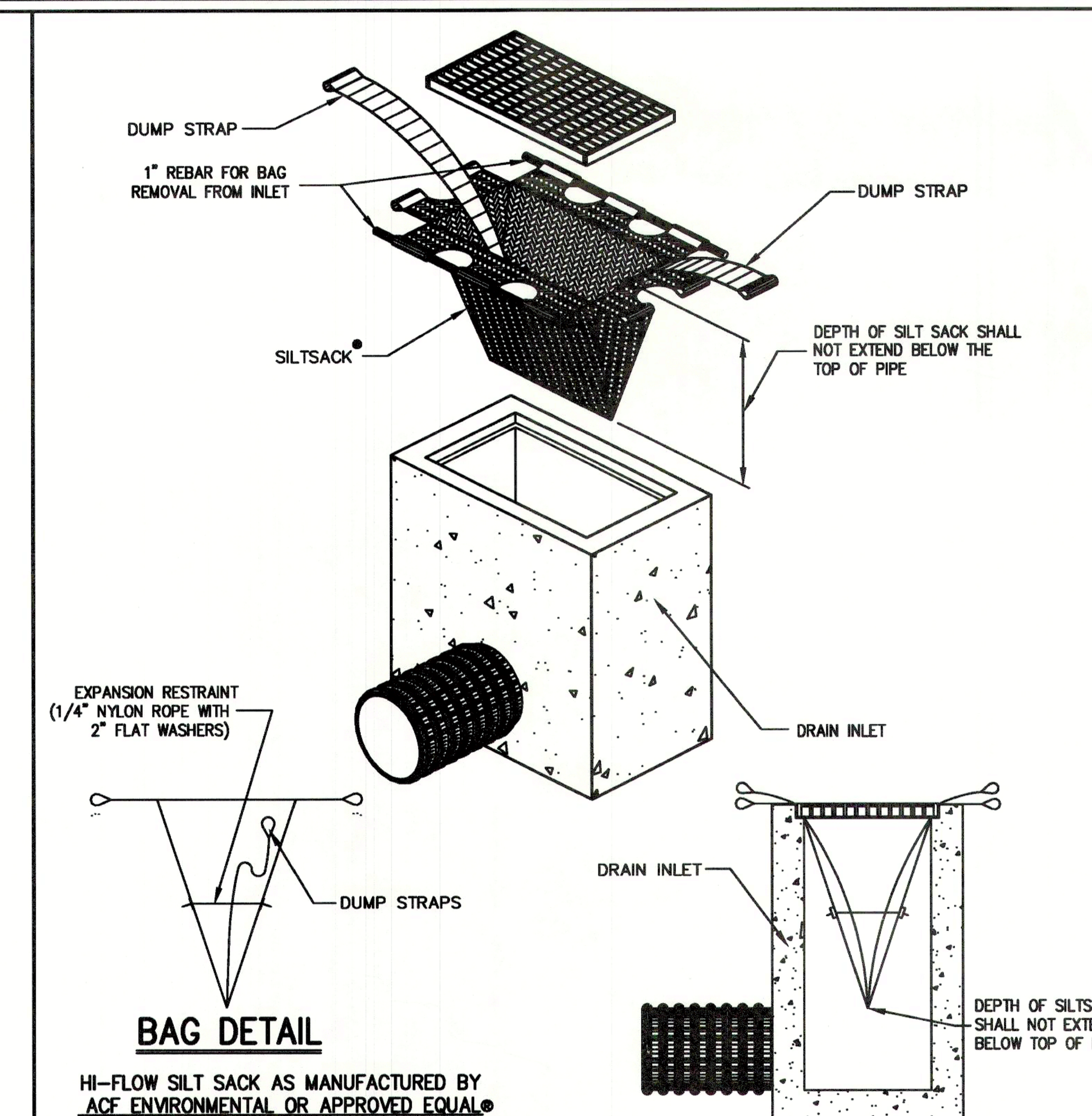

HI-FLOW SILT SACK AS MANUFACTURED BY ACF ENVIRONMENTAL OR APPROVED EQUAL®

(FOR AREAS OF MODERATE TO HEAVY PRECIPITATION AND RUN-OFF)

PROPERTIES	TEST METHOD	UNITS
GRAB TENSILE STRENGTH	ASTM D-4632	265 LBS
GRAB TENSILE ELONGATION	ASTM D-4632	20 %
PUNCTURE	ASTM D-4833	135 LBS
MULLEN BURST	ASTM D-3786	420 PSI
TRAPEZOID TEAR	ASTM D-4533	45 LBS
UV RESISTANCE	ASTM D-4355	90 %
APPARENT OPENING SIZE	ASTM D-4751	20 US SIEVE
FLOW RATE	ASTM D-4491	200 GAL/MIN/SQ FT
PERMITTIVITY	ASTM D-4491	1.5 SEC -1

NOTE:
CURB INLETS SHALL BE TYPE B WITH CURB DEFLECTOR.

SILT SACK — 3

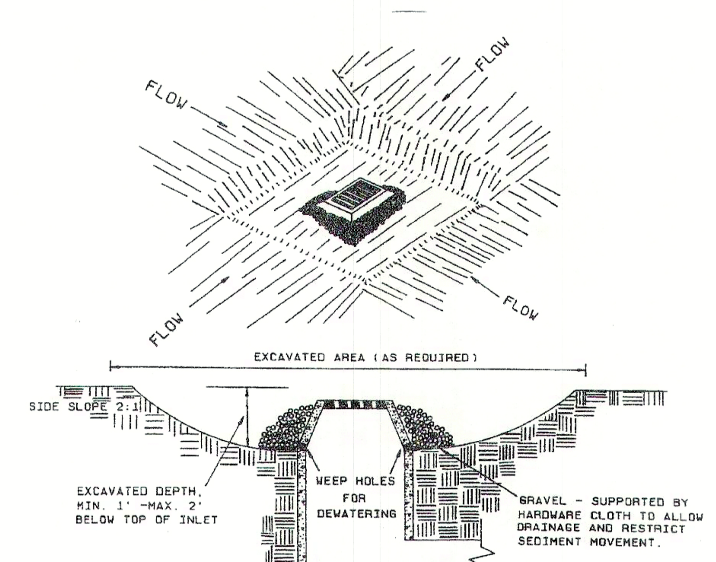

1. CLEAR THE AREA OF ALL DEBRIS THAT WILL HINDER EXCAVATION.
2. GRADE APPROACH TO THE INLET UNIFORMLY AROUND THE BASIN.
3. WEEP HOLES SHALL BE PROCTECTED BY/STONE.
4. PROVIDE FREQUENT INSPECTION AND MAINTENANCE. REMOVE ACCUMULATED SEDIMENT AND REPAIR OR REPLACE INLET PROTECTION TO MAINTAIN EFFECTIVENESS OF THE INSTALLATION.
5. UPON STABILIZATION OF CONTRIBUTING DRAINAGE AREA. SEAL WEEP HOLES FILL BASIN WITH STABLE SOIL TO FINAL GRADE. COMPACT IT PROPERLY AND STABILIZE WITH PERMANET SEEDING.

EXCAVATED DROP INLET PROTECTTION — 4

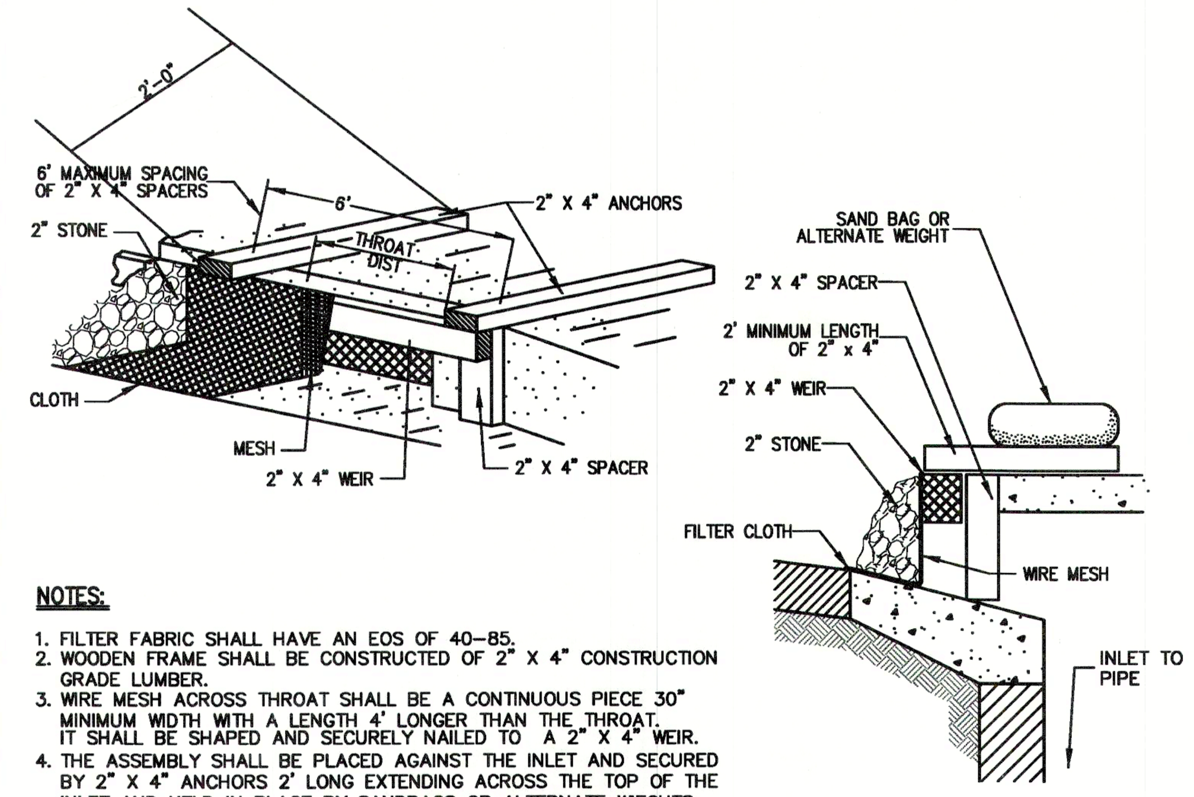

NOTES:

1. FILTER FABRIC SHALL HAVE AN EOS OF 40-85.
2. WOODEN FRAME SHALL BE CONSTRUCTED OF 2" X 4" CONSTRUCTION GRADE LUMBER.
3. WIRE MESH ACROSS THROAT SHALL BE A CONTINUOUS PIECE 30" MINIMUM WIDTH WITH A LENGTH 4' LONGER THAN THE THROAT. IT SHALL BE SHAPED AND SECURELY NAILED TO A 2" X 4" WEIR.
4. THE ASSEMBLY SHALL BE PLACED AGAINST THE INLET AND SECURED BY 2" X 4" ANCHORS 2' LONG EXTENDING ACROSS THE TOP OF THE INLET AND HELD IN PLACE BY SANDBAGS OR ALTERNATE WIEGHTS.
5. INLET PROTECTION SHALL BE INSPECTED FREQUENTLY, MAINTAINED, REPAIRED OR REPLACED TO MAINTAIN EFFECTIVENESS OF INSTALLATION.
6. INLET PROTECTION SHALL BE REMOVED WHEN DIRECTED BY THE OWNER'S FIELD REPRESENTATIVE.
7. IF A SIDEWALK EXISTS, THE CONTRACTOR SHALL PROVIDE PROTECTIVE FENCING (SEE DETAIL) TO PROTECT THE PUBLIC.
8. THE WEIR SHALL BE SECURELY NAILED TO 2" X 4" SPACERS 9 INCHES LONG SPACED NO MORE THAN 6 FEET APART.

MAXIMUM DRAINAGE AREA 1 ACRE

DROP CURB INLET PROTECTION STRUCTURE — 5

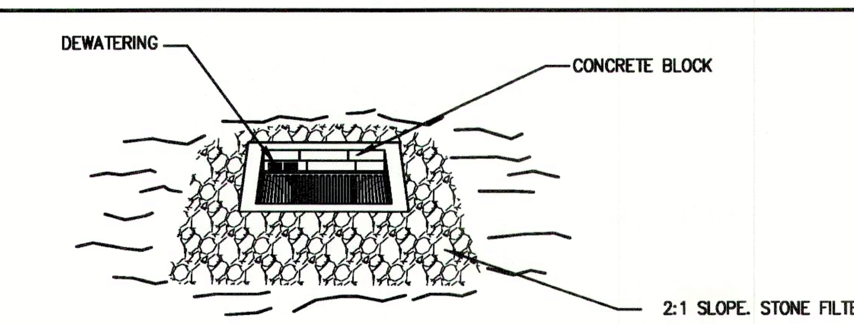

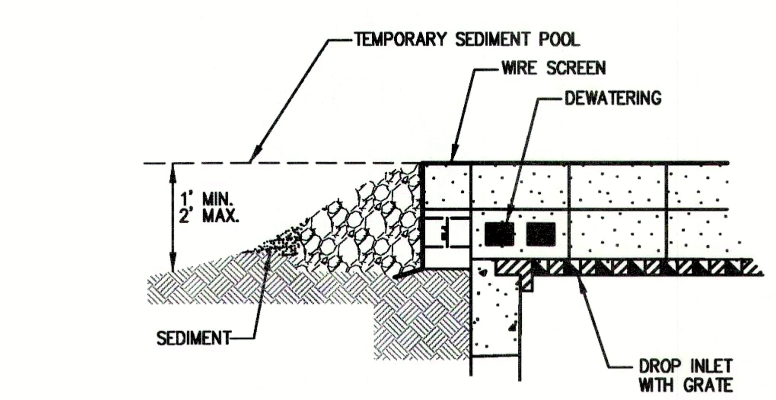

STONE & BLOCK DETAIL

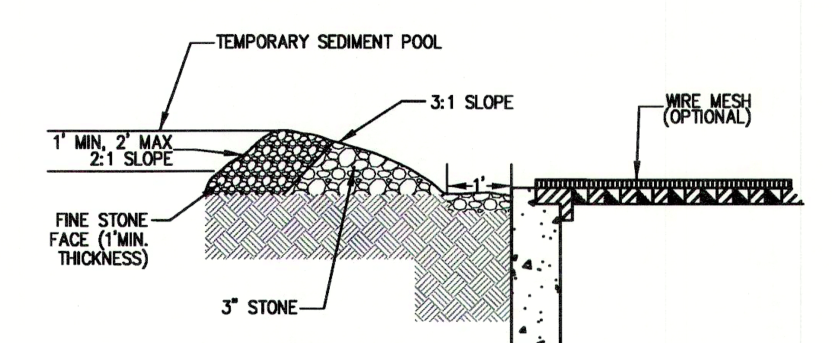

DOUGHNUT DETAIL

NOTES:

1. LAY ONE BLOCK ON EACH SIDE OF THE STRUCTURE ON ITS SIDE FOR DEWATERING. FOUNDATION SHALL BE 2 INCHES MINIMUM BELOW REST OF INLET AND BLOCKS SHALL BE PLACED AGAINST INLET FOR SUPPORT.
2. HARDWARE CLOTH OR 1/2" WIRE MESH SHALL BE PLACED OVER BLOCK OPENINGS TO SUPPORT STONE.
3. USE CLEAN STONE 1/2" TO 3/4" IN DIAMETER PLACED 2" BELOW THE TOP OF THE BLOCK ON A 2:1 SLOPE OR FLATTER.
4. FOR STONE STRUCTURES ONLY. A 1 FOOT THICK LAYER OF THE FILTER STONE WILL BE PLACED AGAINST THE 3" STONE AS SHOWN ON THE DRAWINGS.

STONE & BLOCK DROP INLET PROTECTION — 6

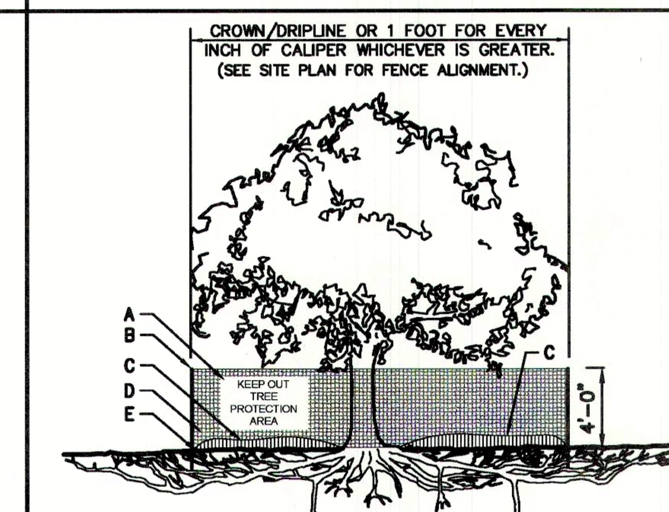

TREE PROTECTION (DRIPLINE FENCE)

A	8.5"X11" SIGN LAMINATED IN PLASTIC SPACED EVERY 50' ALONG FENCE
B	2"X6' STEEL POSTS OR APPROVED EQUAL.
C	5" THICK LAYER OF MULCH.
D	TREE PROTECTION FENCE: HIGH DENSITY POLYETHYLENE FENCING WITH 3.5" X 1.5" OPENINGS; COLOR ORANGE. STEEL POSTS INSTALLED AT 8' O.C.
E	MAINTAIN EXISTING GRADE WITHIN THE TREE PROTECTION FENCE UNLESS OTHERWISE INDICATED ON THE PLANS.
F	INSTALL ROUGH SAWN WOOD WHERE AND AS DIRECTED BY PROJECT LANDSCAPE ARCHITECT OR PROFESSIONAL ARBORIST. SEE CHART FOR WOOD SIZE BOUND WITH 9 GAUGE WIRE.
G	8"–12" THICK LAYER OF MULCH ON MAINTENANCE ROAD. 5" THICK LAYER INSIDE TREE PROTECTION AREA.

TREE DIAMETER	ROUGH SAWN WOOD SIZE
<12"	2"X2"
13"–24"	2"X4"
>25"	2"X6"

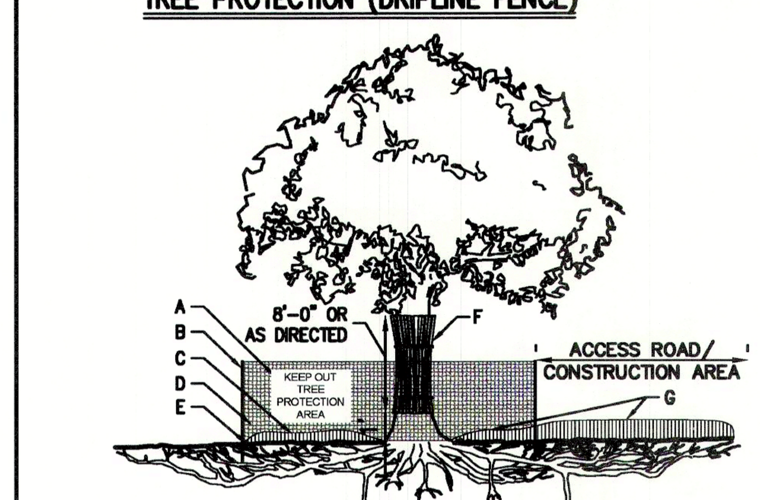

TREE PROTECTION W/ ACCESS ROAD/CONSTRUCTION AREA (DRIPLINE FENCE)

NOTES:

1. SEE SPECIFICATIONS FOR ADDITIONAL TREE PROTECTION REQUIREMENTS.
2. IF THERE IS NO EXISTING IRRIGATION, SEE SPECIFICATIONS FOR WATERING REQUIREMENTS.
3. NO PRUNING SHALL BE PERFORMED EXCEPT BY APPROVED ARBORIST.
4. NO EQUIPMENT SHALL OPERATE INSIDE THE PROTECTIVE FENCING INCLUDING DURING FENCE INSTALLATION AND REMOVAL.
5. SEE SITE PLANS FOR IDENTIFICATIONS/LOCATIONS OF INDIVIDUAL TREES TO BE PROTECTED.
6. ALL EXCAVATION WITHIN THE CROWN/DRIPLINE OF ANY TREE SHALL BE PERFORMED UNDER THE DIRECT SUPERVISION OF THE PROJECT LANDSCAPE ARCHITECT OR PROFESSIONAL ARBORIST. SPECIAL MEASURES, SUCH AS THE USE OF AN AIR SPADE MAY BE REQUIRED.
7. THE CONTRACTOR MAY PROPOSE THE USE OF ENGINEERED MATTING OR OTHER ENGINEERED PRODUCTS IN LIEU OF MULCH, WHICH SHALL BE SUBJECT TO THE REVIEW AND APPROVAL OF ALL AUTHORITIES HAVING JURISDICTION.

TREE PROTECTION — 7

No.	Revision	Date
1.	TOWN HIGHWAY DEPARTMENT SUBMISSION	12/15/2020
2.	ISSUED FOR BUILDING PERMIT	03/12/2021

Previous Editions Obsolete

JMC Planning, Engineering, Landscape Architecture & Land Surveying, PLLC
JMC Site Development Consultants, LLC
John Meyer Consulting, Inc.
120 BEDFORD ROAD • ARMONK, NY 10504
voice 914.273.5225 • fax 914.273.2102
www.jmcpllc.com

JMC

CONSTRUCTION DETAILS

500 COMMERCE STREET REDEVELOPMENT
500 COMMERCE STREET
HAWTHORNE, NY 10532

ANY ALTERATION OF PLANS, SPECIFICATIONS, PLATS AND REPORTS BEARING THE SEAL OF A LICENSED PROFESSIONAL ENGINEER OR LICENSED LAND SURVEYOR IS A VIOLATION OF SECTION 7209 OF THE NEW YORK STATE EDUCATION LAW, EXCEPT AS PROVIDED FOR BY SECTION 7209, SUBSECTION 2.

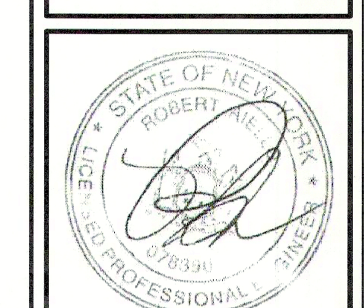

Drawn: JR	Approved: RA
Scale:	NOT TO SCALE
Date:	01/06/2020
Project No:	18158
18158-DETAILS	C-900
Drawing No:	C-900

COPYRIGHT © 2021 by JMC All Rights Reserved. No part of this document may be reproduced, stored in a retrieval system, or transmitted in any form or by any means, electronic, mechanical, photocopying, recording or otherwise, without the prior written permission of JMC PLANNING, ENGINEERING, LANDSCAPE ARCHITECTURE & LAND SURVEYING, PLLC | JMC SITE DEVELOPMENT CONSULTANTS, LLC | JOHN MEYER CONSULTING, INC. (JMC). Any modifications or alterations to this document without the written permission of JMC shall render them invalid and unusable.

NOT FOR CONSTRUCTION

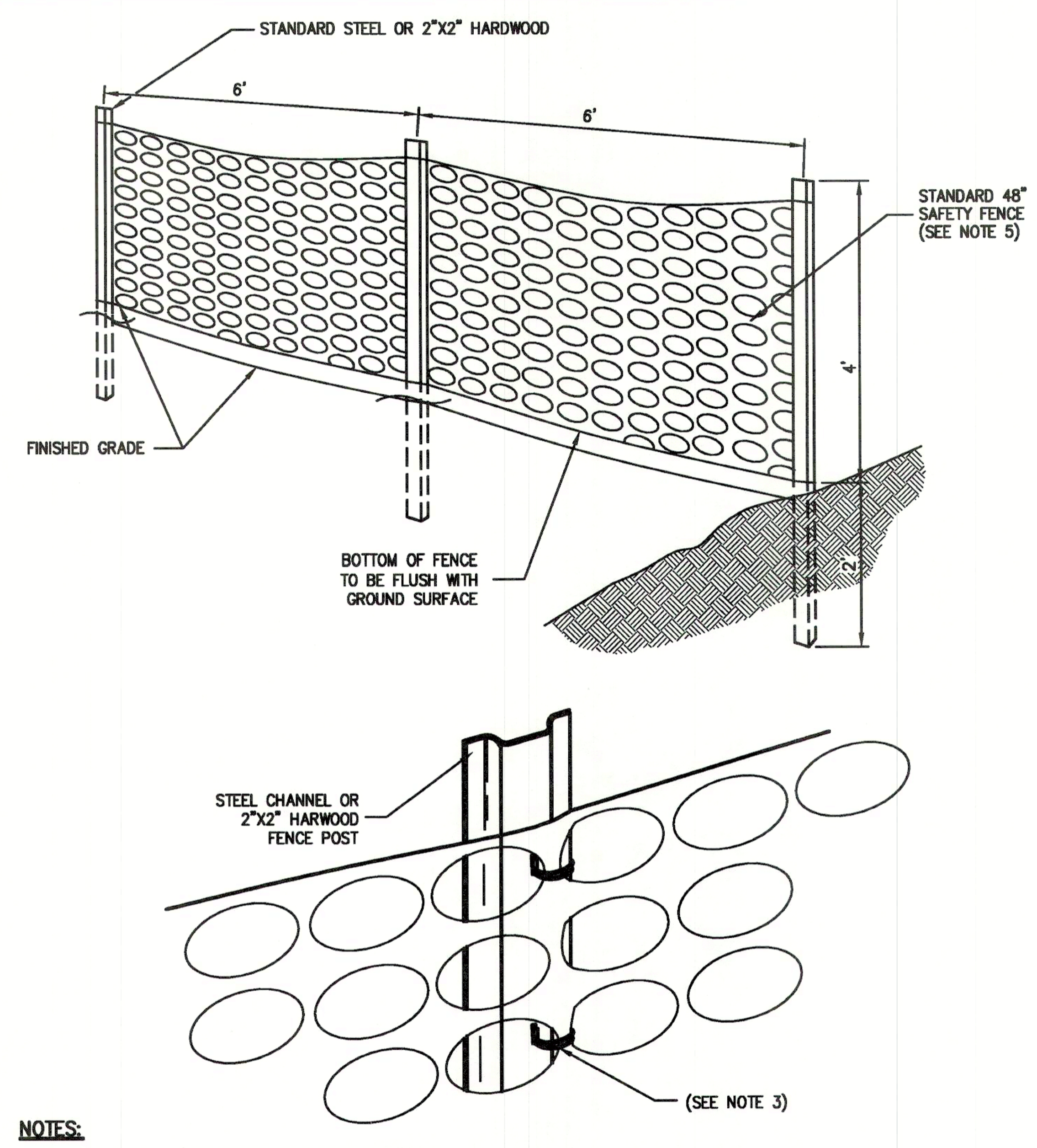

NOTES:

1. SPACE SUPPORT FENCE POSTS AT 6 FOOT INTERVALS.
2. DRIVE SUPPORT POSTS 2 FEET INTO GROUND.
3. FIRMLY FASTEN FENCE MATERIAL IN PLACE BY WIRING TO FENCE POST WHILE MAINTAINING TENSION ACROSS FULL HEIGHT OF FENCE. WIRING SHALL BE DONE IN A MANNER THAT WILL PREVENT SAGGING OF FENCE MATERIAL.
4. PROVIDE PERIODIC INSPECTION AND MAINTENANCE OF FENCE INCLUDING REPAIRS AS NECESSARY AND REQUIRED.
5. PLASTIC FENCE SHALL BE INTERNATIONAL ORANGE COLOR, AS MANUFACTURED BY ADPI ENTERPRISES, INC. OR APPROVED EQUAL.
6. REMOVE CONSTRUCTION FENCE AS DIRECTED BY THE OWNER'S FIELD REPRESENTATIVE.

CONSTRUCTION FENCE — 8

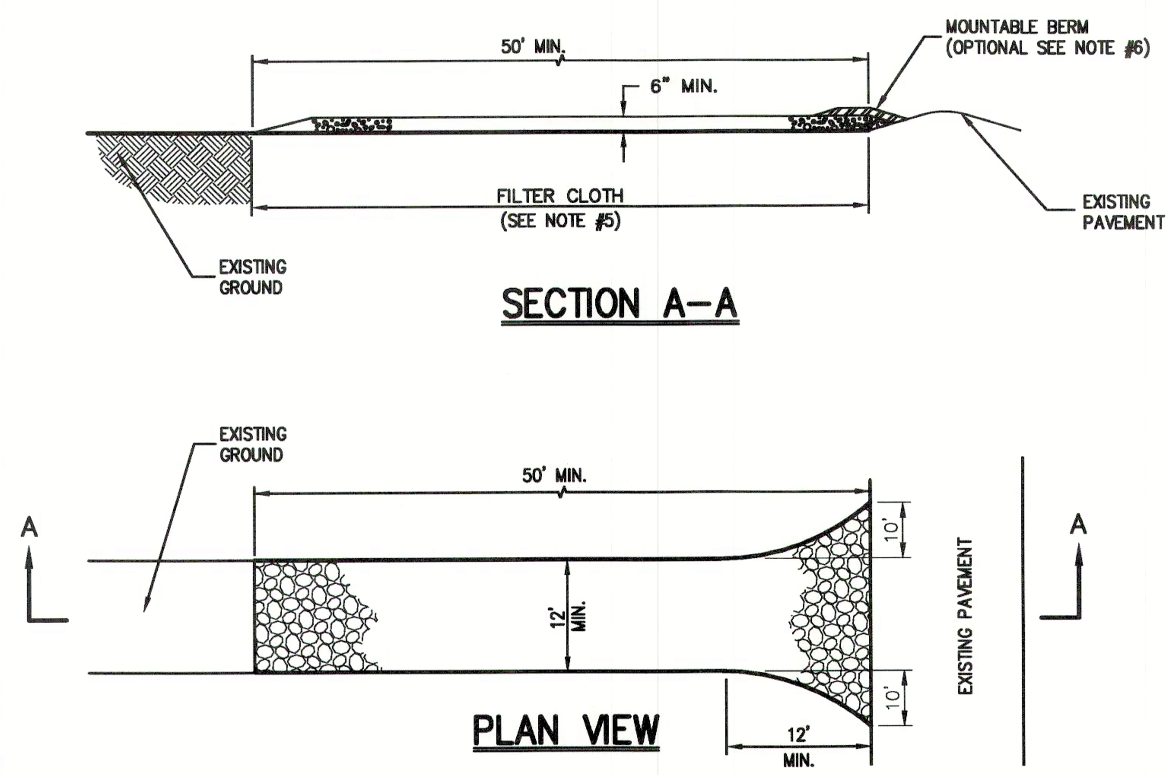

NOTES

1. STONE SIZE – USE 1" TO 4" STONE, OR RECLAIMED OR RECYCLED CONCRETE EQUIVALENT.
2. LENGTH – AS REQUIRED, BUT NOT LESS THAN 50 FEET.
3. THICKNESS – NOT LESS THAN SIX (6) INCHES.
4. WIDTH – 12 FOOT MINIMUM, BUT NOT LESS THAN THE FULL WIDTH AT POINTS WHERE INGRESS OR EGRESS OCCURS. 24 FOOT MINIMUM IF SINGLE ENTRANCE TO SITE.
5. FILTER CLOTH TO BE PLACED OVER THE ENTIRE WIDTH AND LENGTH OF AREA PRIOR TO PLACING OF STONE.
6. SURFACE WATER – ALL SURFACE WATER FLOWING OR DIVERTED TOWARD CONSTRUCTION ENTRANCES SHALL BE PIPED BENEATH THE ENTRANCE. IF PIPING IS IMPRACTICAL, A MOUNTABLE BERM WITH 5:1 SLOPES WILL BE PERMITTED.
7. MAINTENANCE – THE ENTRANCE SHALL BE MAINTAINED IN A CONDITION WHICH WILL PREVENT TRACKING OR FLOWING OF SEDIMENT ONTO PUBLIC RIGHTS-OF-WAY. THIS MAY REQUIRE PERIODIC TOP DRESSING WITH ADDITIONAL STONE AS CONDITIONS DEMAND AND REPAIR AND/OR CLEANOUT OF ANY MEASURE USED TO TRAP SEDIMENT. ALL SEDIMENT SPILLED, DROPPED, WASHED OR TRACKED ONTO PUBLIC RIGHTS-OF-WAY MUST BE REMOVED IMMEDIATELY.
8. WASHING – WHEELS SHALL BE CLEANED TO REMOVE SEDIMENT PRIOR TO ENTRANCE ONTO PUBLIC RIGHTS-OF-WAY. WHEN WASHING IS REQUIRED, IT SHALL BE DONE ON AN AREA STABILIZED WITH STONE AND WHICH DRAINS INTO AN APPROVED SEDIMENT TRAPPING DEVICE.
9. PERIODIC INSPECTION AND NEEDED MAINTENANCE SHALL BE PROVIDED AFTER EACH RAIN.

STABILIZED CONSTRUCTION ENTRANCE — 9

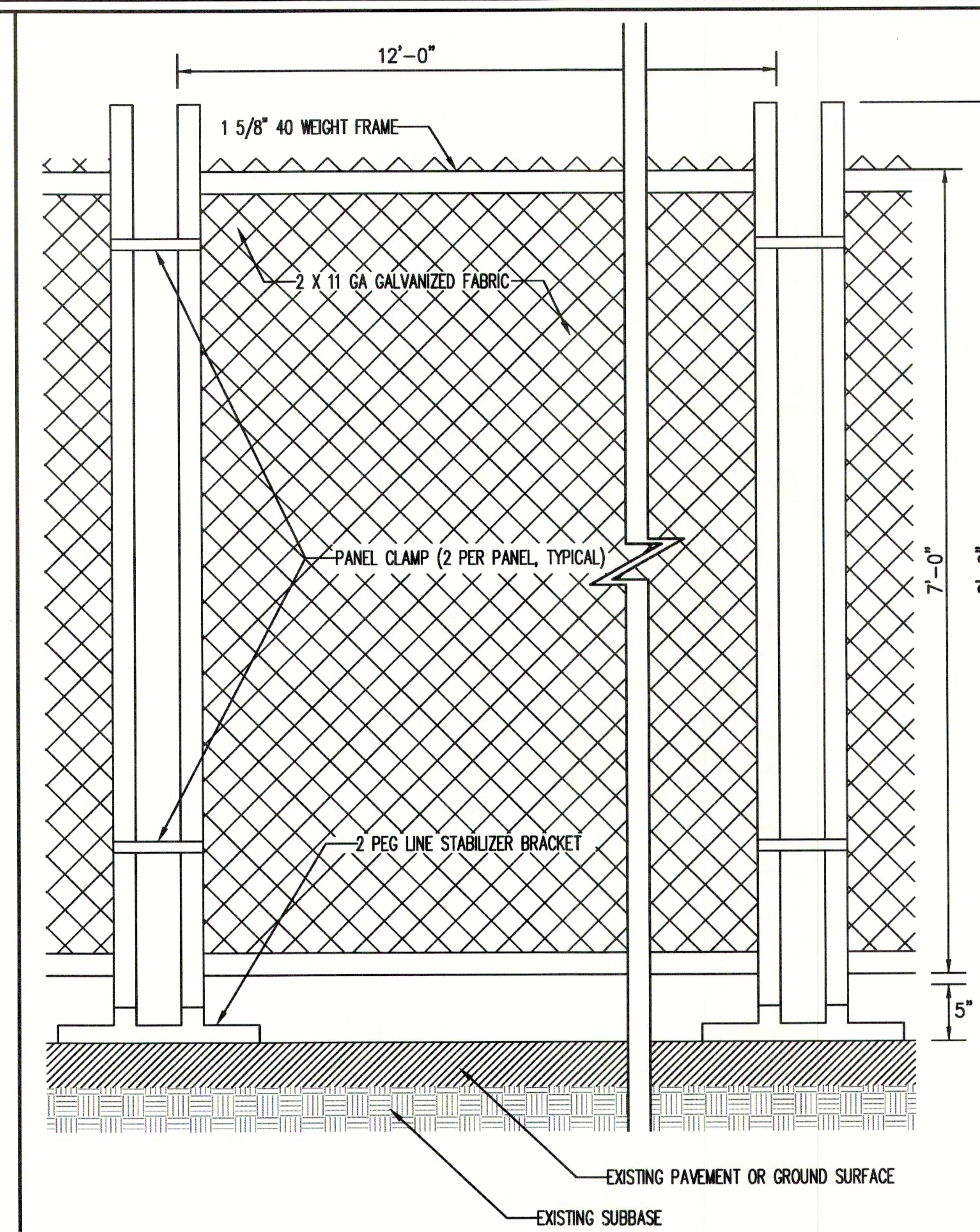

NOTE:
STABILIZED BRACKET TO BE HOT DIPPED GALVANIZED STEEL PIPE.

TEMPORARY CHAIN LINK CONSTRUCTION FENCE — 10

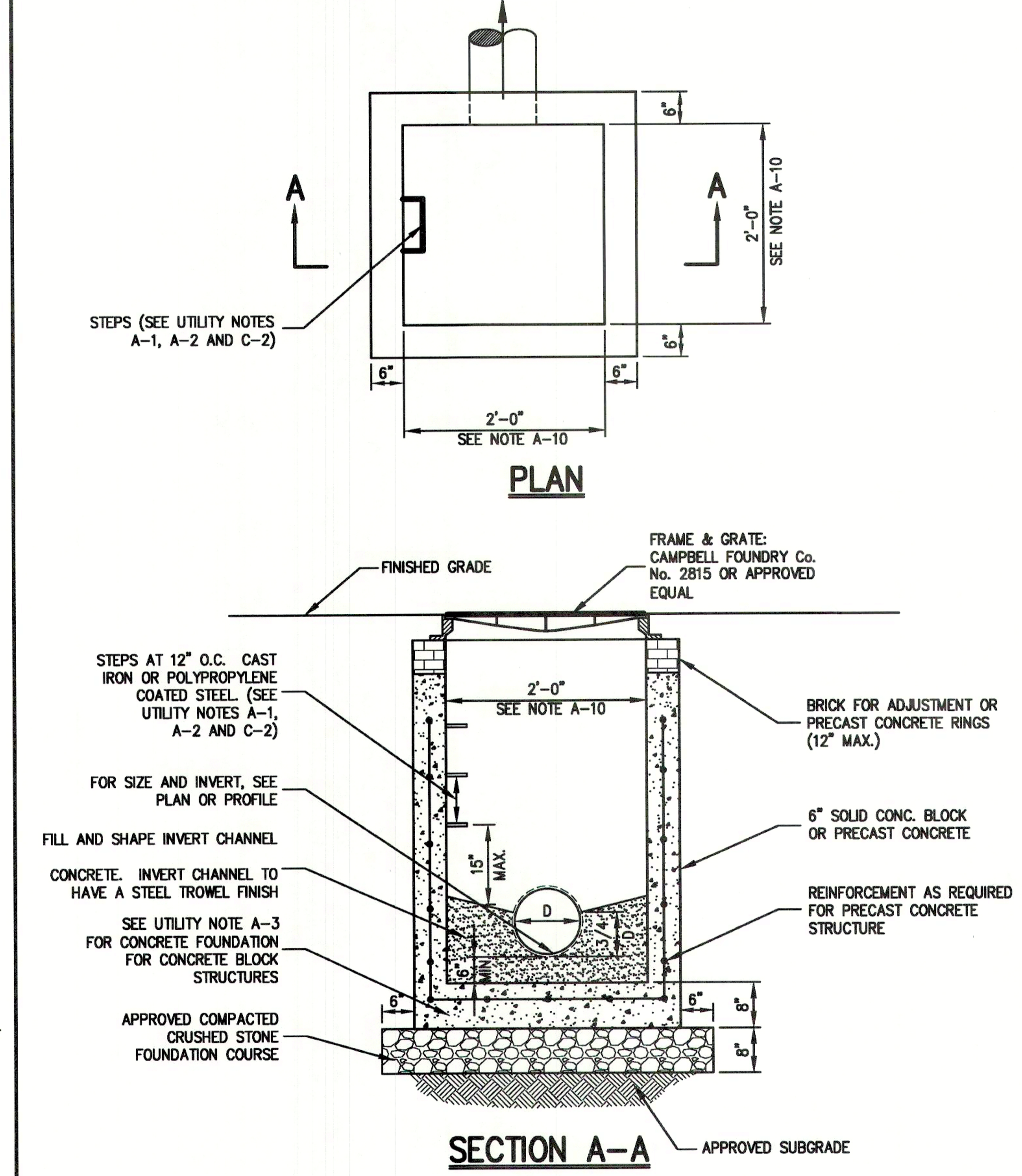

NOTE
2. SEE NOTES PERTAINING TO DRAIN INLETS UNDER UTILITY NOTES ON DRAWING C-902

LAWN INLET (TYPE LI) (w/o sump) — 11

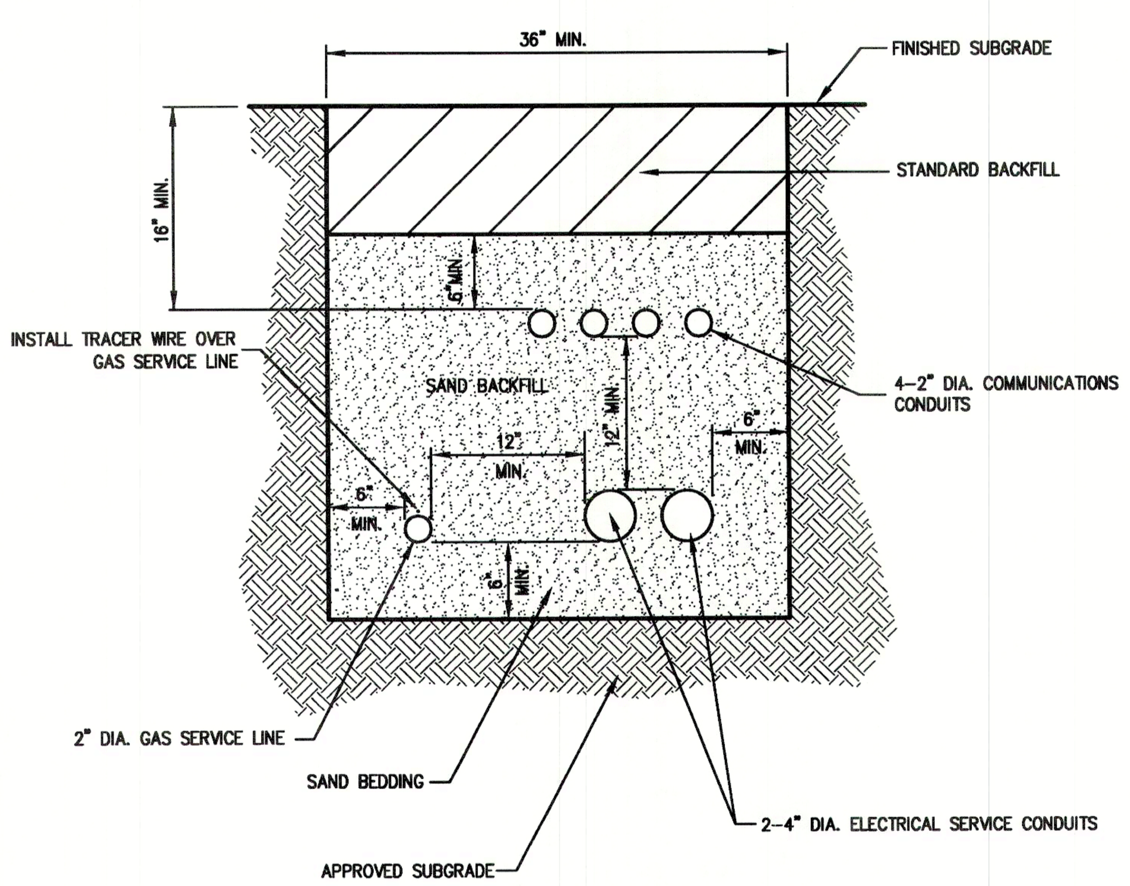

IN FIELD USING CLASS A (4000 PSI)

NOTES:

1. UTILITIES TO BE INSTALLED IN ACCORDANCE WITH THE REGULATIONS AND REQUIREMENTS OF THE UTILITY COMPANY HAVING JURISDICTION.
2. BACKFILL FOR PIPE AND CONDUIT SHALL BE PLACED EVENLY AND CAREFULLY AROUND AND OVER THE PIPE OR CONDUIT IN SIX (6) INCH MAXIMUM LAYERS. EACH LAYER SHALL BE THOROUGHLY AND CAREFULLY COMPACTED UNTIL TWELVE (12) INCHES OF COVER EXISTS OVER THE PIPE OR CONDUIT. THE REMAINDER OF THE BACKFILL MAY THEN BE PLACED AND COMPACTED IN A MAXIMUM OF TWELVE (12) INCH LAYERS. EACH LAYER SHALL BE COMPACTED BY APPROVED MECHANICAL TAMPING MACHINES. UNLESS OTHERWISE SPECIFIED BACKFILL SHALL BE COMPACTED TO NOT LESS THAN 92% MAXIMUM MODIFIED DENSITY IN ACCORDANCE WITH ASTM DESIGNATION D-1557 IN THE MANNER HEREIN DESCRIBED. BACKFILL SHALL PROCEED UP TO THE LINES AND GRADES AS SHOWN ON THE DRAWINGS.
3. CONTRACTOR SHALL STAKE THE PROPOSED SERVICE LINES AND CONDUITS PRIOR TO BACKFILLING TO ENSURE SERVICES DO NOT MOVE WITHIN TRENCH.

UTILITY TRENCH DETAIL — 12

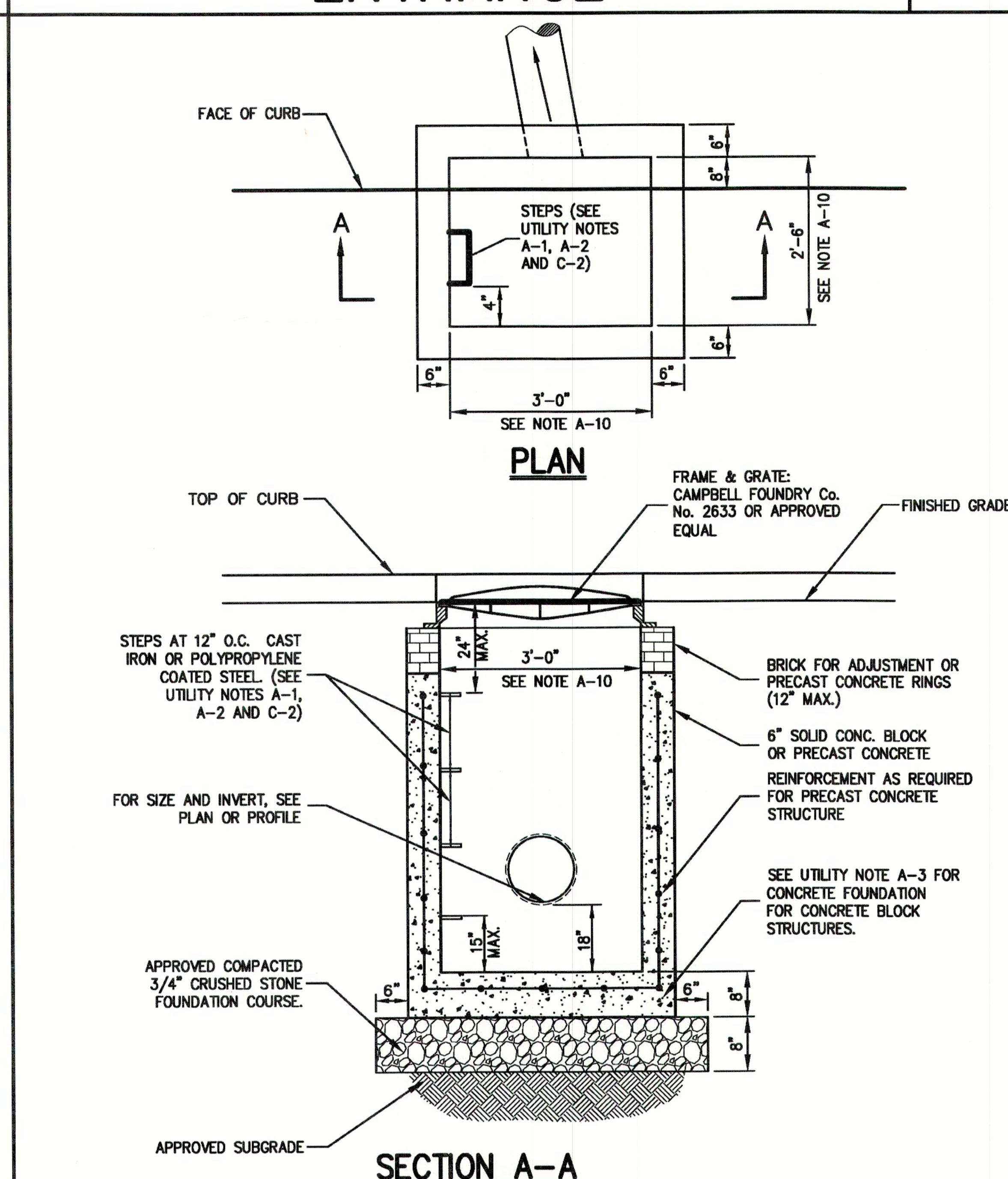

NOTE:
1. SEE NOTES PERTAINING TO DRAIN INLETS UNDER UTILITY NOTES ON DRAWING C-902

DRAIN INLET (TYPE CI) (with sump-w/o finger underdrains) — 13

14

15

No.	Revision	Date
1.	TOWN HIGHWAY DEPARTMENT SUBMISSION	12/15/2020
2.	ISSUED FOR BUILDING PERMIT	03/12/2021

Previous Editions Obsolete

JMC Planning, Engineering, Landscape Architecture & Land Surveying, PLLC
JMC Site Development Consultants, LLC
John Meyer Consulting, Inc.
120 BEDFORD ROAD · ARMONK, NY 10504
voice 914.273.5225 · fax 914.273.2102
www.jmcpllc.com

CONSTRUCTION DETAILS

500 COMMERCE STREET REDEVELOPMENT
500 COMMERCE STREET
HAWTHORNE, NY 10532

ANY ALTERATION OF PLANS, SPECIFICATIONS, PLATS AND REPORTS BEARING THE SEAL OF A LICENSED PROFESSIONAL ENGINEER OR LICENSED LAND SURVEYOR IS A VIOLATION OF SECTION 7209 OF THE NEW YORK STATE EDUCATION LAW, EXCEPT AS PROVIDED FOR BY SECTION 7209, SUBSECTION 2.

STATE OF NEW YORK · ROBERT ... · PROFESSIONAL ENGINEER

Drawn: JR	Approved: RA
Scale: NOT TO SCALE	
Date: 01/06/2020	
Project No: 18158	
18158-DETAILS	C-901
Drawing No: C-901	

NOT FOR CONSTRUCTION
COPYRIGHT © 2021 by JMC All Rights Reserved. No part of this document may be reproduced, stored in a retrieval system, or transmitted in any form or by any means, electronic, mechanical, photocopying, recording or otherwise, without the prior written permission of JMC PLANNING, ENGINEERING, LANDSCAPE ARCHITECTURE & LAND SURVEYING, PLLC | JMC SITE DEVELOPMENT CONSULTANTS, LLC | JOHN MEYER CONSULTING, INC. (JMC). Any modifications or alterations to this document without the written permission of JMC shall render them invalid and unusable.

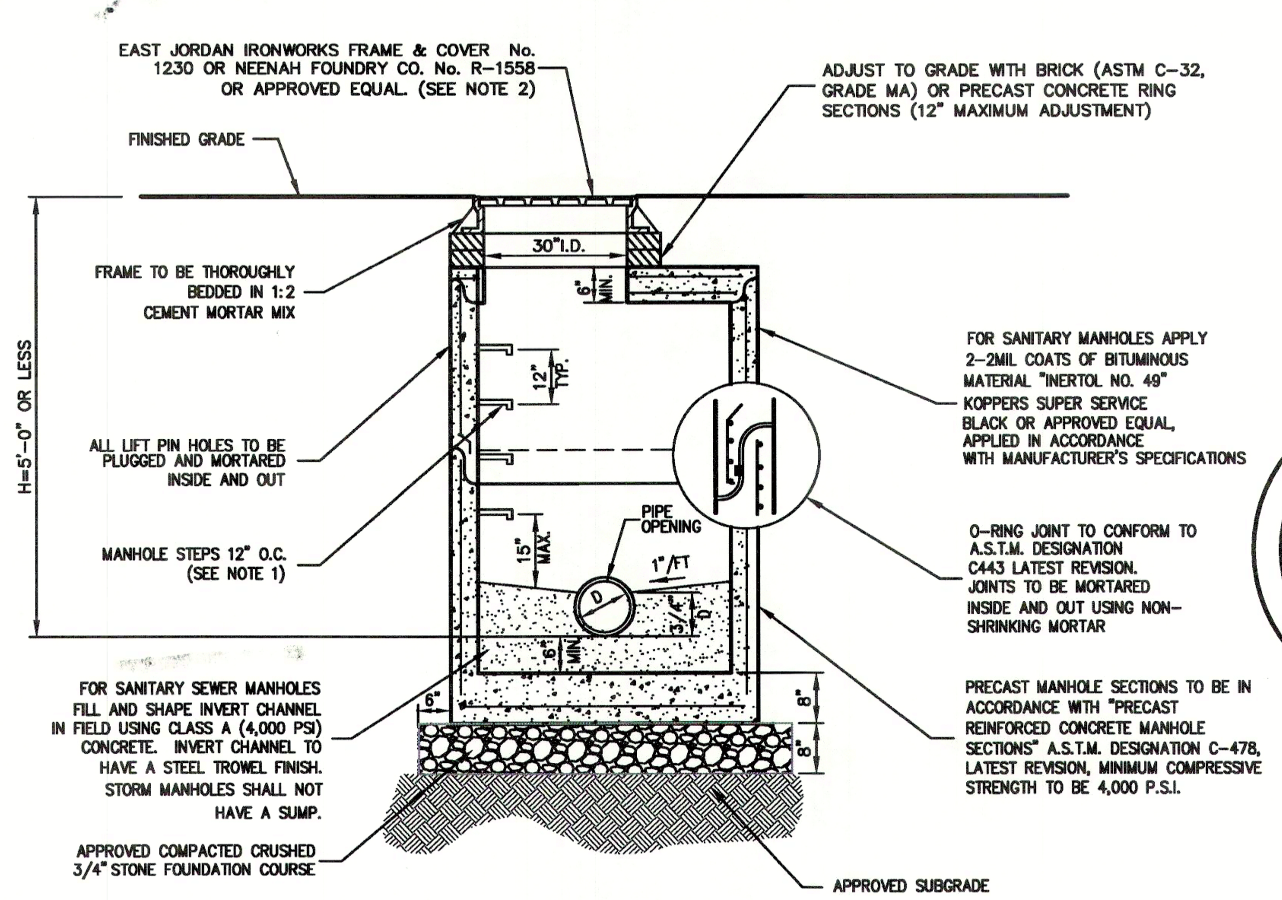

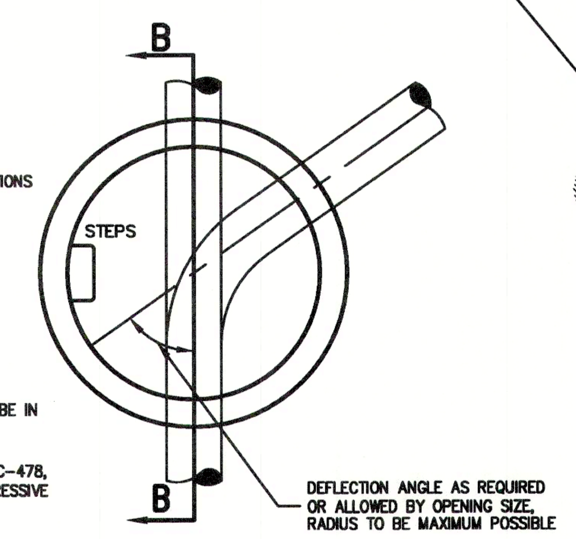

PLAN

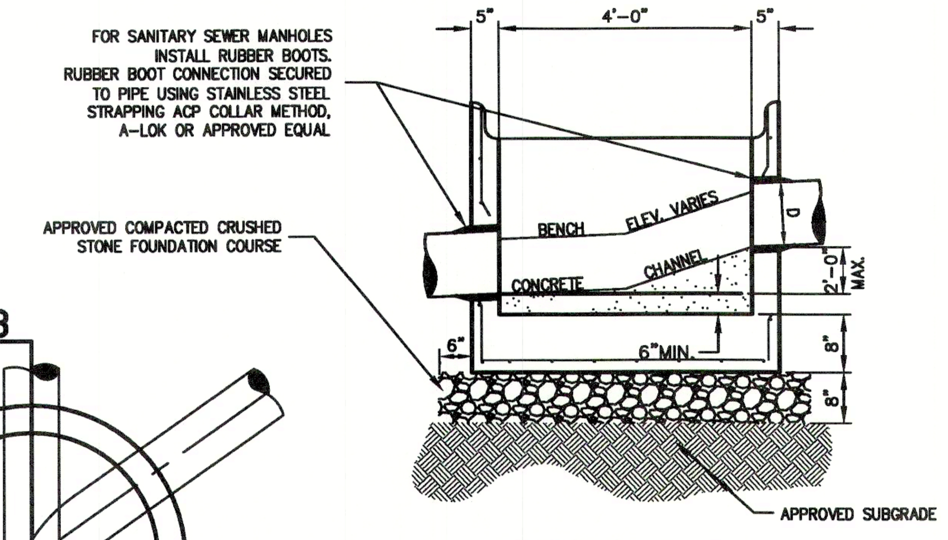

SECTION B–B
(Chute Manhole Base)

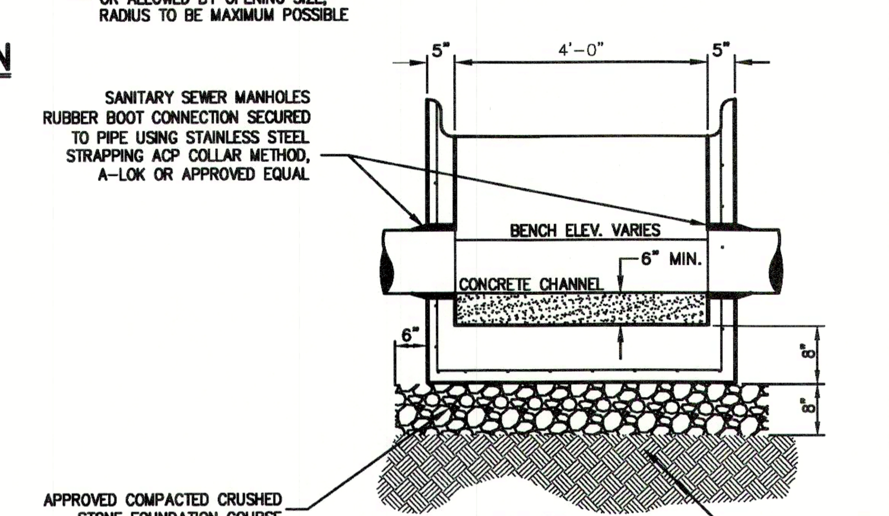

SECTION B–B
(Standard Manhole Base)

NOTES:

1. MANHOLE STEPS SHALL BE CAST IRON NEENAH No. R-1981-0 OR CAMPBELL FOUNDRY No. 2588-1 OR POLYPROPYLENE COATED STEEL (SEE SPECIFICATIONS) OR APPROVED EQUAL.
2. UNLESS OTHERWISE SPECIFIED, SANITARY SEWER MANHOLES SHALL HAVE LETTERS "SEWER" AND STORM DRAIN MANHOLES SHALL HAVE LETTERS "DRAIN" CAST ON COVER. THE COVERS SHALL HAVE VENT HOLES.
3. MANHOLES SHALL MEET OR EXCEED A.S.T.M. AND O.S.H.A. REQUIREMENTS.
4. SEE "NOTES PERTAINING TO MANHOLES" UNDER "UTILITY NOTES" ON DRAWING C-902

MANHOLE (TYPE A) 16
(H < 5'-0")

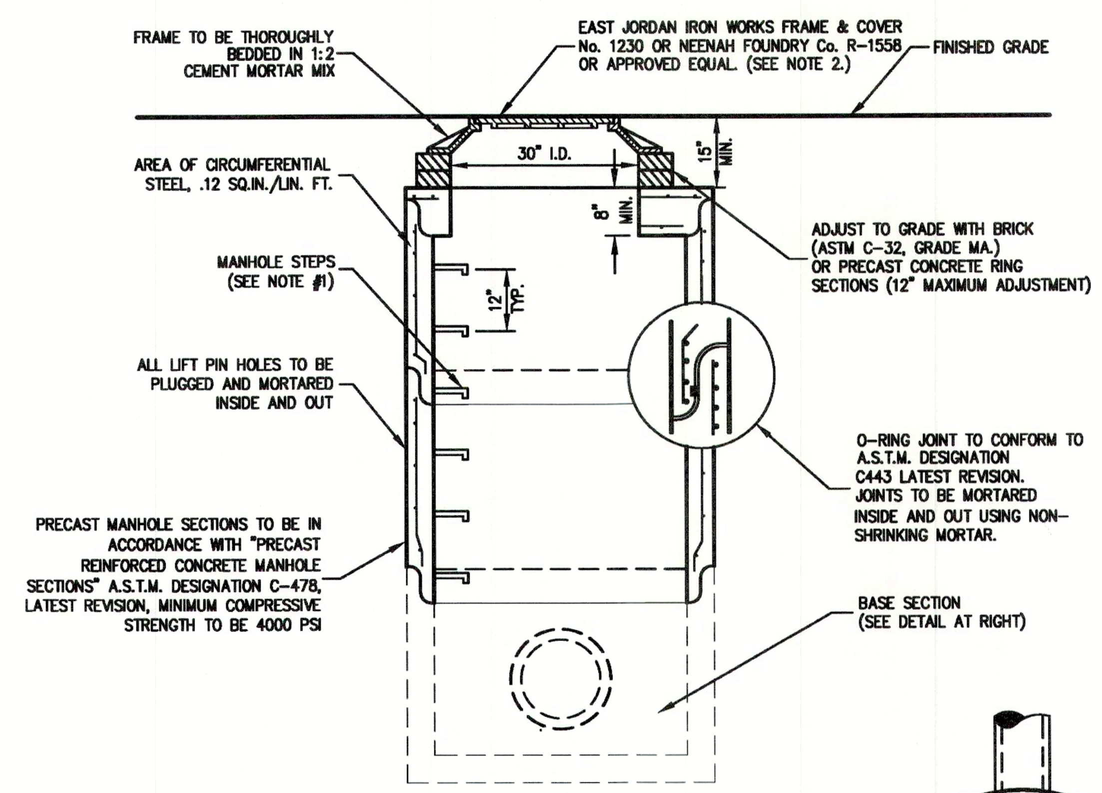

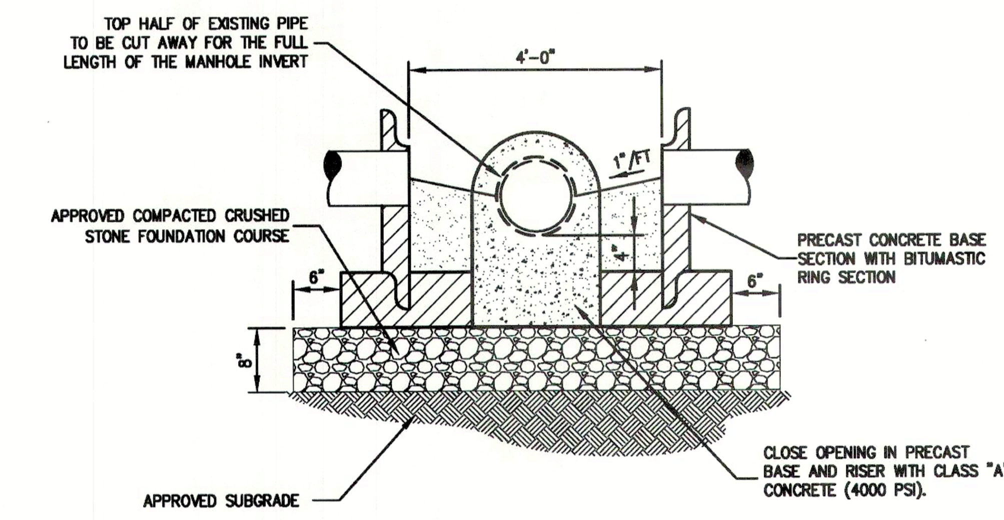

TYPE 1

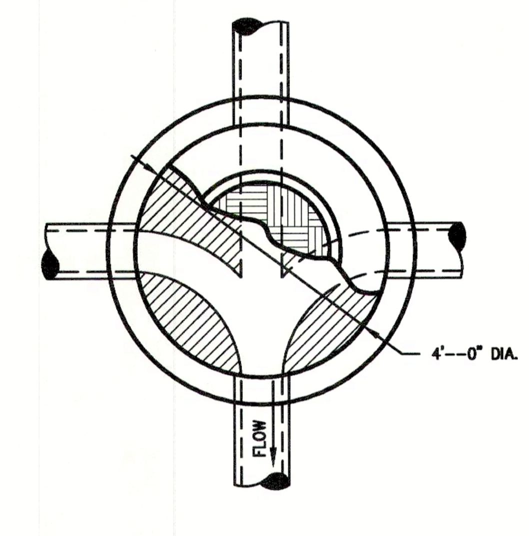

PLAN

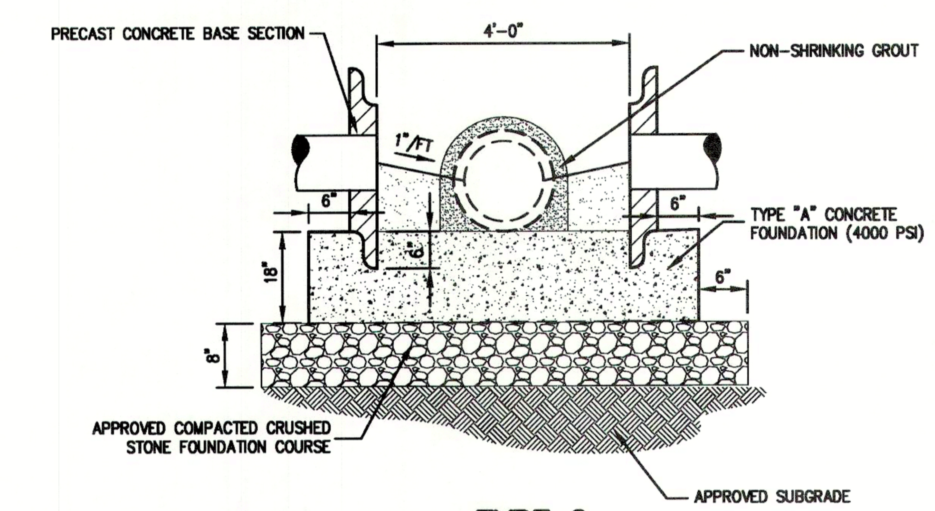

TYPE 2

NOTES:

1. MANHOLE STEPS SHALL BE CAST IRON NEENAH No. R-1981-0 OR CAMPBELL FOUNDRY No. 2588-1 OR POLYPROPYLENE COATED STEEL (SEE SPECIFICATIONS) OR APPROVED EQUAL.
2. UNLESS OTHERWISE SPECIFIED, SANITARY SEWER MANHOLES SHALL HAVE LETTERS "SEWER" AND STORM DRAIN MANHOLES SHALL HAVE LETTERS "DRAIN" CAST ON COVER. THE COVERS SHALL HAVE VENT HOLES.
3. MANHOLES WITH DEPTH (h) 10' OR GREATER SHALL BE FIVE (5) FEET IN DIAMETER.
4. MANHOLES SHALL MEET OR EXCEED A.S.T.M. AND O.S.H.A. REQUIREMENTS.
5. SEE "NOTES PERTAINING TO MANHOLES" UNDER "UTILITY NOTES" ON DRAWING C-901
6. CONCRETE SHALL BE SLOPED AT 1"/FT.

DOGHOUSE MANHOLE 17

NOTES PERTAINING TO DRAIN INLETS

A-1 STEPS WILL NOT BE REQUIRED IN INLETS LESS THAN FOUR (4) FEET IN DEPTH. STEPS WILL BE REQUIRED IN INLETS FOUR (4) FEET OR GREATER IN DEPTH. DEPTHS FOR DRAIN INLETS SHALL BE MEASURED FROM FINISHED GRADE TO INSIDE BOTTOM OF STRUCTURE (INCLUDING SUMP AS APPLICABLE).

A-2 WHEN STEPS ARE REQUIRED, STEPS SHALL COMPLY WITH THE SAME REQUIREMENTS OF ASTM STANDARD C-478, ARTICLE 13 ENTITLED "MANHOLE STEPS & LADDERS".

A-3 FOR MASONRY STRUCTURES, THE FIRST COURSE OF MASONRY SHALL BE SET IN THE CONCRETE FOUNDATION BEFORE THE CONCRETE HAS SET. CONCRETE FOUNDATION SHALL BE CLASS "A"(4000 psi) CONCRETE, TWELVE (12) INCHES THICK AND SHALL EXTEND SIX (6) INCHES BEYOND THE OUTSIDE FACE THE STRUCTURE.

A-4 IT SHALL BE THE CONTRACTOR'S RESPONSIBILITY TO FURNISH AND CONSTRUCT THE PROPER SIZE STRUCTURE INCLUDING THE NECESSARY OPENINGS TO ACCOMMODATE THE WORK AS SHOWN ON THE PLANS OR ORDERED BY THE ENGINEER, AT NO ADDITIONAL COST TO THE OWNER.

A-5 ALL NECESSARY PATCHING FOR DRAIN STRUCTURES SHALL BE ACCOMPLISHED WITH NON-SHRINKING CEMENT MORTAR GROUT, APPROVED EQUAL TO SIKA-SET AS MANUFACTURED BY THE SIKA CHEMICAL CORP.

A-6 FOUNDATIONS FOR PRECAST CONCRETE STRUCTURES SHALL BE SET ON A COMPACTED LAYER OF APPROVED CRUSHED STONE HAVING A MINIMUM COMPACTED THICKNESS OF EIGHT (8) INCHES.

A-7 ALL PIPES SHALL BE CUT FLUSH WITH THE INSIDE WALL OF THE STRUCTURE.

A-8 PROVIDE REINFORCED CONCRETE TOP SLAB FOR OVERSIZED DRAIN INLETS WITH PROPER SIZE OPENING TO ACCOMMODATE INSTALLATION OF FRAME & GRATE.

A-9 FOR MASONRY STRUCTURES GREATER THAN TEN (10) FEET IN DEPTH, THICKNESS OF MASONRY WALLS SHALL BE INCREASED TO TWELVE (12) INCHES.

A-10 FOR ALL STRUCTURES GREATER THAN 10 FEET IN DEPTH, STRUCTURES SHALL PROVIDE MINIMUM INSIDE DIMENSIONS OF 4 FEET X 4 FEET.

NOTES PERTAINING TO MANHOLES

B-1 PRECAST CONCRETE MANHOLES SHALL COMPLY WITH ASTM STANDARD C-478. MANHOLE JOINTS SHALL COMPLY WITH ASTM STANDARD C-443.

B-2 FOR PRECAST CONCRETE MANHOLES FIVE (5) FEET OR LESS IN HEIGHT, TOP CONE SECTION SHALL BE REPLACED WITH PRECAST REINFORCED CONCRETE SLAB (6" MIN. THICKNESS) WITH OPENING OF SUFFICIENT SIZE TO ACCOMMODATE MANHOLE CASTING.

B-3 FOR MANHOLES 10 FEET OR MORE IN DEPTH, MANHOLE DIAMETER SHALL BE FIVE (5) FEET.

B-4 TERMINAL MANHOLE FLOORS SHALL BE SLOPED TOWARD OUTFALL PIPE.

B-5 INVERT CHANNELS FOR PRECAST CONCRETE MANHOLES SHALL BE CONSTRUCTED OF CONCRETE.

B-6 NOTES A-1, A-2, A-4, A-5, A-6 & A-7 UNDER "NOTES PERTAINING TO DRAIN INLETS" ABOVE SHALL APPLY TO MANHOLES.

NOTES PERTAINING TO PRECAST CONCRETE STRUCTURES FOR STORM DRAINS, SANITARY SEWERS AND WATER LINES

C-1 ALL PRECAST CONCRETE STRUCTURES SHALL BE DESIGNED TO ACCOMMODATE AN H-20 DESIGN LOAD.

C-2 STEPS SHALL BE LOCATED WITHIN STRUCTURE TO AVOID PLACEMENT OVER PIPES WHEN PRACTICABLE.

UTILITY NOTES 18

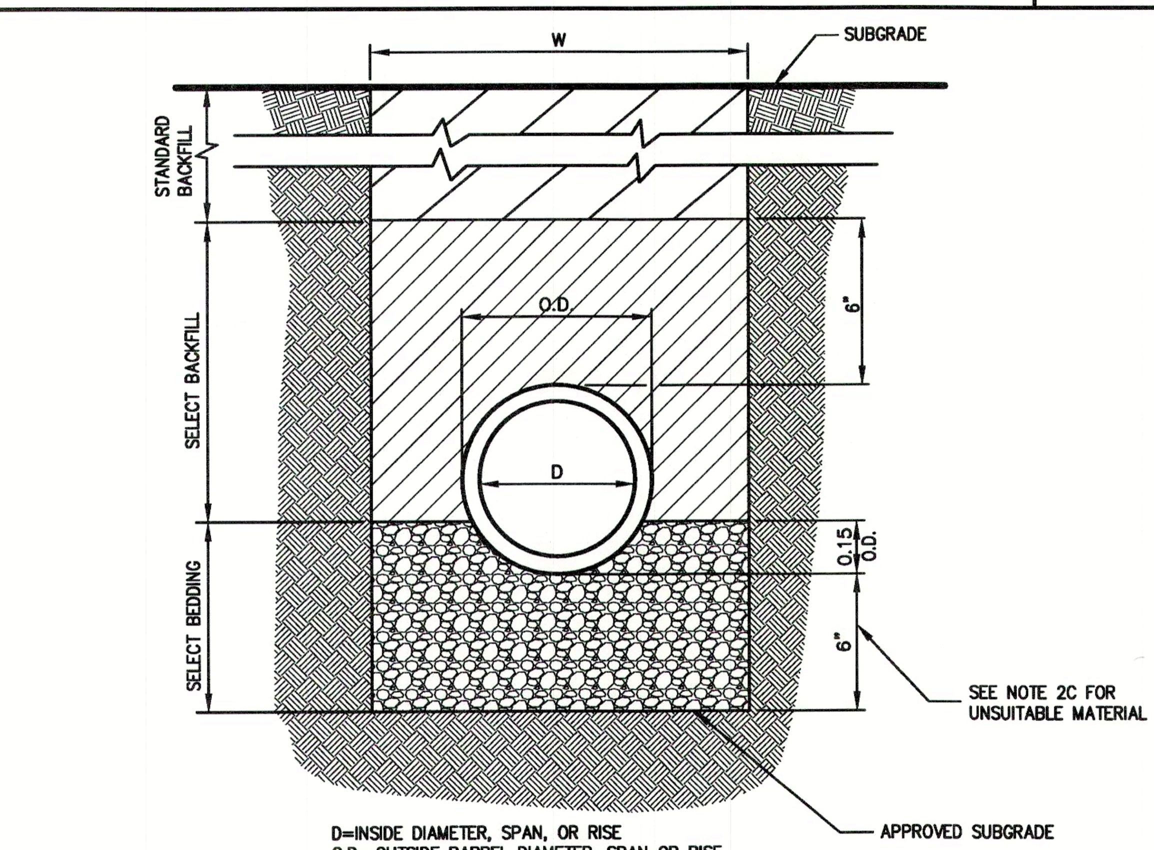

D=INSIDE DIAMETER, SPAN, OR RISE
O.D.=OUTSIDE BARREL DIAMETER, SPAN OR RISE
H.D.=OUTSIDE DIAMETER, SPAN, OR RISE @ BELL OR BAND
W=H.D. + 2.0' – FOR 48" OR SMALLER DIAMETER, SPAN, OR RISE
W=H.D. + 2.5' – FOR GREATER THAN 48" DIAMETER, SPAN, OR RISE

NOTES:

1. FOR TYPE II TRENCH, MATERIAL FOR SELECT BEDDING AND SELECT BACKFILL SHALL BE:
   A. EITHER SAND OR CRUSHED STONE IF NO WATER IS ENCOUNTERED IN TRENCH.
   B. 3/4"CRUSHED STONE IF WATER IS ENCOUNTERED IN TRENCH.
2. TYPE II TRENCH SHALL BE USED IN ALL OF THE FOLLOWING CASES:
   A. FOR ALL CORRUGATED POLYETHYLENE DRAIN PIPE (CPDP) AND PVC PIPE AND CONDUIT INSTALLATION.
   B. WHEN ROCK OR HARDPAN IS ENCOUNTERED IN BOTTOM OF TRENCH.
   C. WHEN UNSUITABLE MATERIAL IS ENCOUNTERED IN BOTTOM OF TRENCH. IN SUCH CASE DEPTH OF UNDERCUTTING SHALL BE AS DIRECTED BY THE ENGINEER WITH 6" MINIMUM.
3. FOR ALL TRENCH EXCAVATION IN FILL AREAS, ALL EMBANKMENTS SHALL BE CONSTRUCTED TO A MINIMUM OF 2 FEET ABOVE THE OUTSIDE TOP (AT THE BELL) OF THE PIPE PRIOR TO BEGINNING ANY TRENCH EXCAVATION.
4. BACKFILL FOR PIPE AND CONDUIT SHALL BE PLACED EVENLY AND CAREFULLY AROUND AND OVER THE PIPE OR CONDUIT IN SIX (6) INCH MAXIMUM LAYERS. EACH LAYER SHALL BE THOROUGHLY AND CAREFULLY COMPACTED UNTIL TWELVE (12) INCHES OF COVER EXISTS OVER THE PIPE OR CONDUIT. THE REMAINDER OF THE BACKFILL MAY THEN BE PLACED AND COMPACTED IN A MAXIMUM OF TWELVE (12) INCH LAYERS. EACH LAYER SHALL BE COMPACTED BY APPROVED MECHANICAL TAMPING MACHINES. UNLESS OTHERWISE SPECIFIED BACKFILL SHALL BE COMPACTED TO NOT LESS THAN 92% MAXIMUM MODIFIED DENSITY IN ACCORDANCE WITH ASTM DESIGNATION D-1557 IN THE MANNER HEREIN DESCRIBED. BACKFILL SHALL PROCEED UP TO THE LINES AND GRADES AS SHOWN ON THE DRAWINGS.

TYPE II TRENCH 19

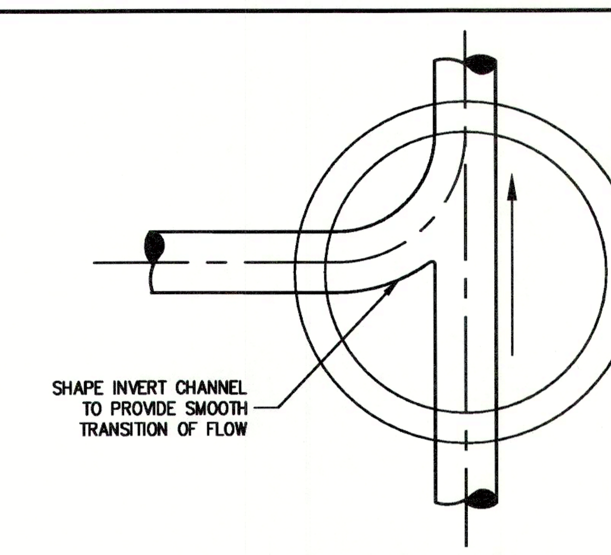

PLAN OF INVERT CHANNEL

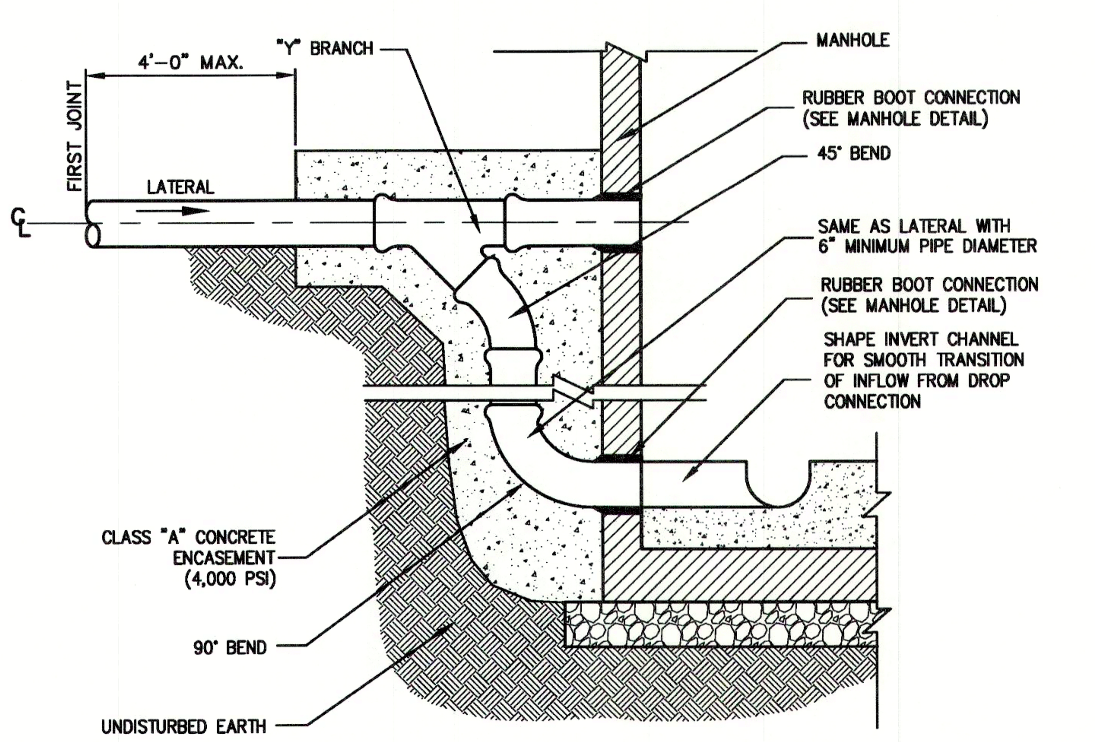

NOTES:

1. DROP CONNECTION SHALL BE USED WHEN INCOMING SANITARY SEWER IS MORE THAN 2'-0" HIGHER THAN THE OUTGOING SEWER.
2. PIPE SIZE OF DROP CONNECTION SHALL BE THE SAME SIZE AS LATERAL WITH 6" MINIMUM DIAMETER.

DROP CONNECTION AT MANHOLE 20
(SANITARY SEWER)

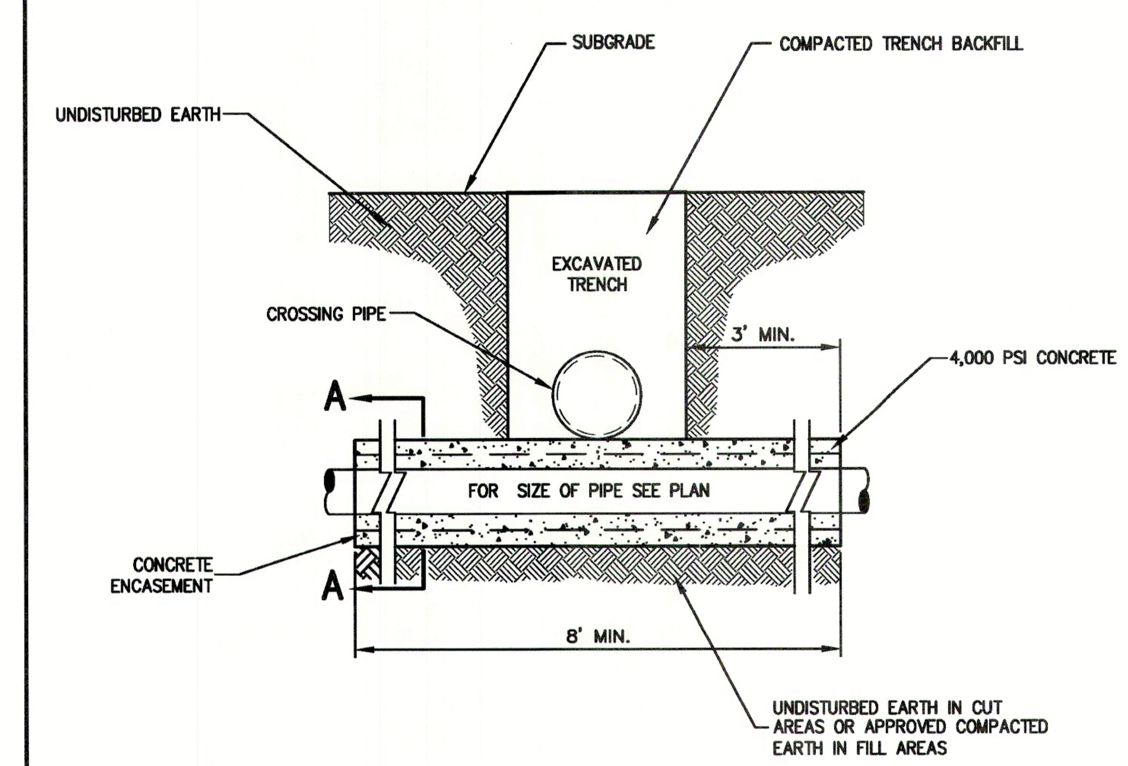

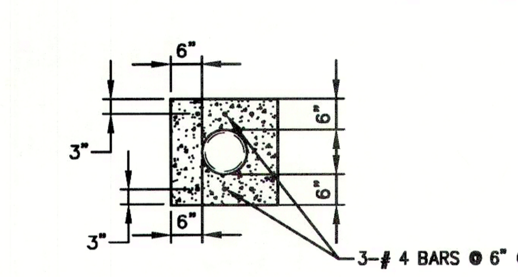

SECTION A–A

NOTE:

1. FULL LENGTH OF PIPE TO BE USED AT CROSSING. PIPE TO BE CENTERED ON CENTERLINE OF CROSSING PIPE. NO JOINTS SHALL BE LOCATED. WITHIN THE AREA OF CONCRETE ENCASEMENT.

CONCRETE ENCASEMENT 21

No.	Revision	Date
1.	WCDOH SUBMISSION	08/03/2020
2.	RESPONSE TO WCDOH COMMENTS	10/06/2020
3.	TOWN HIGHWAY DEPARTMENT SUBMISSION	12/15/2020
4.	ISSUED FOR BUILDING PERMIT	03/12/2021

Previous Editions Obsolete

JMC
JMC Planning, Engineering, Landscape Architecture & Land Surveying, PLLC
JMC Site Development Consultants, LLC
John Meyer Consulting, Inc.
120 BEDFORD ROAD · ARMONK, NY 10504
voice 914.273.5225 · fax 914.273.2102
www.jmcpllc.com

CONSTRUCTION DETAILS

500 COMMERCE STREET REDEVELOPMENT
500 COMMERCE STREET
HAWTHORNE, NY 10532

ANY ALTERATION OF PLANS, SPECIFICATIONS, PLATS AND REPORTS BEARING THE SEAL OF A LICENSED PROFESSIONAL ENGINEER OR LICENSED LAND SURVEYOR IS A VIOLATION OF SECTION 7209 OF THE NEW YORK STATE EDUCATION LAW, EXCEPT AS PROVIDED FOR BY SECTION 7209, SUBSECTION 2.

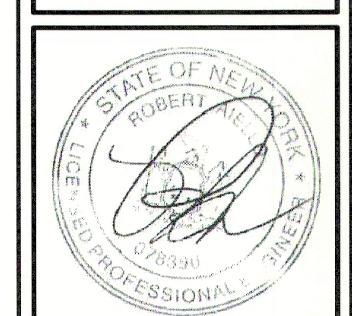

Drawn:	JR	Approved:	RA
Scale:	NOT TO SCALE		
Date:	01/06/2020		
Project No:	18158		
18158-DETAILS	C-902	-	
Drawing No:	C-902		

COPYRIGHT © 2021 by JMC All Rights Reserved. No part of this document may be reproduced, stored in a retrieval system, or transmitted in any form or by any means, electronic, mechanical, photocopying, recording or otherwise, without the prior written permission of JMC PLANNING, ENGINEERING, LANDSCAPE ARCHITECTURE & LAND SURVEYING, PLLC | JMC SITE DEVELOPMENT CONSULTANTS, LLC | JOHN MEYER CONSULTING, INC. (JMC). Any modifications or alterations to this document without the written permission of JMC shall render them invalid and unusable.

NOT FOR CONSTRUCTION

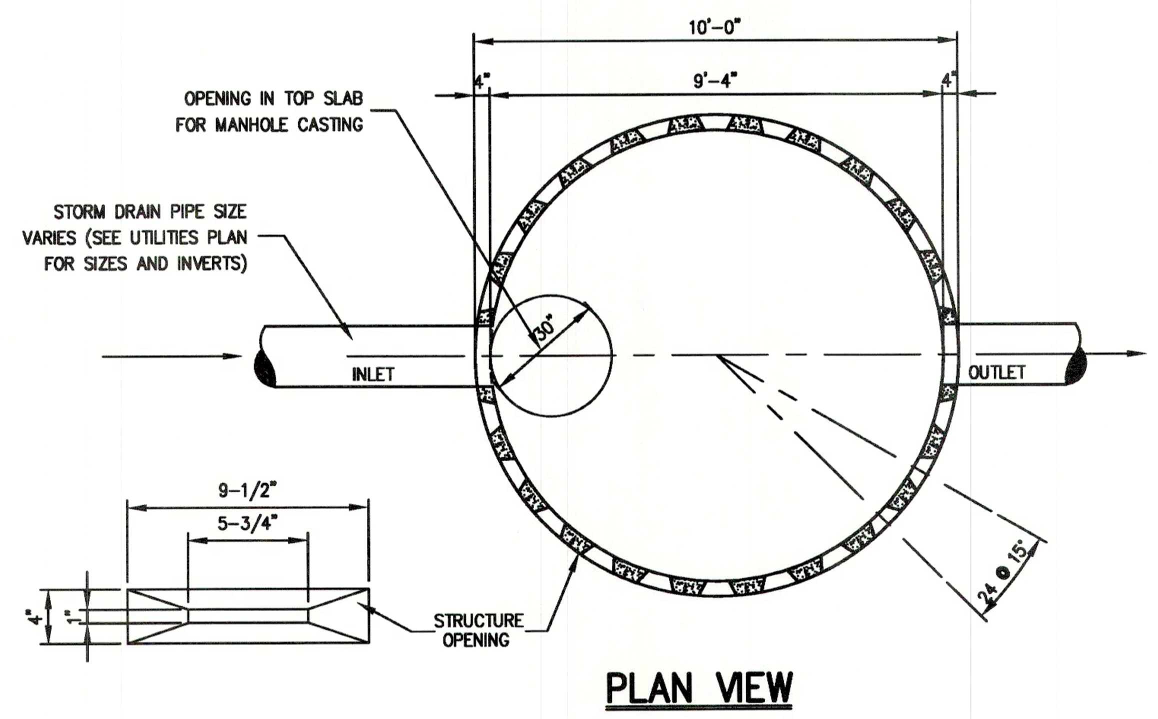

PLAN VIEW

NOTES:

1. CONCRETE TO TEST 4000 PSI AT 28 DAYS. WELDED WIRE MESH TO COMPLY WITH ASTM A185.
2. NOTES A-4,A-5,A-6 & A-7 UNDER "UTILITY NOTES" SHALL APPLY TO WATER QUALITY STRUCTURES.
3. MANUFACTURER SHALL PROVIDE NECESSARY OPENINGS IN PROPER LOCATIONS AND PROPER SIZES FOR INLET & OUTLET PIPES.

WATER QUALITY STRUCTURE

22

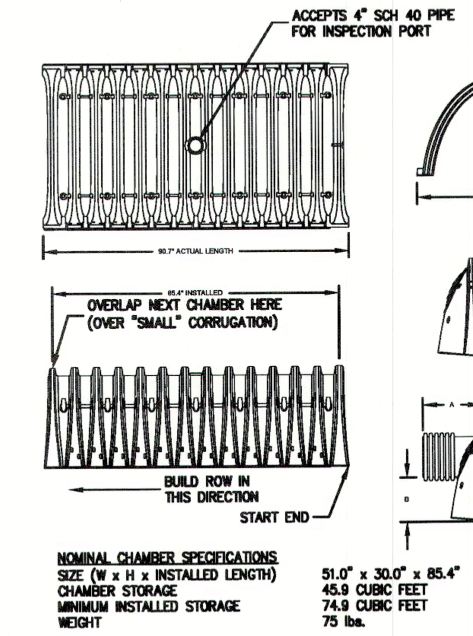

NOMINAL CHAMBER SPECIFICATIONS
SIZE (W x H x INSTALLED LENGTH) 51.0" x 30.0" x 85.4"
CHAMBER STORAGE 45.9 CUBIC FEET
MINIMUM INSTALLED STORAGE 74.9 CUBIC FEET
WEIGHT 75 lbs.

SCHEDULE OF INVERTS

DESIGNATION	(A) FOUNDATION BOTTOM	(B) CHAMBER BOTTOM	(C) MANIFOLD & INLET STUB INVERT	(D) ISOLATOR ROW PIPE INVERT	(E) OVERFLOW WEIR INVERT
SC-740	268.50	269.00	269.00	269.00	271.15

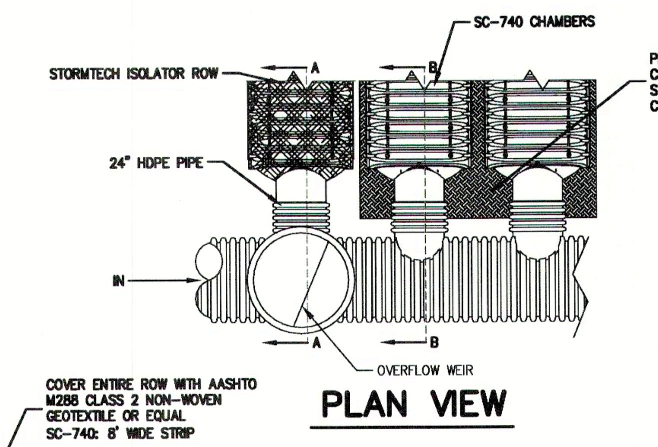

PLAN VIEW

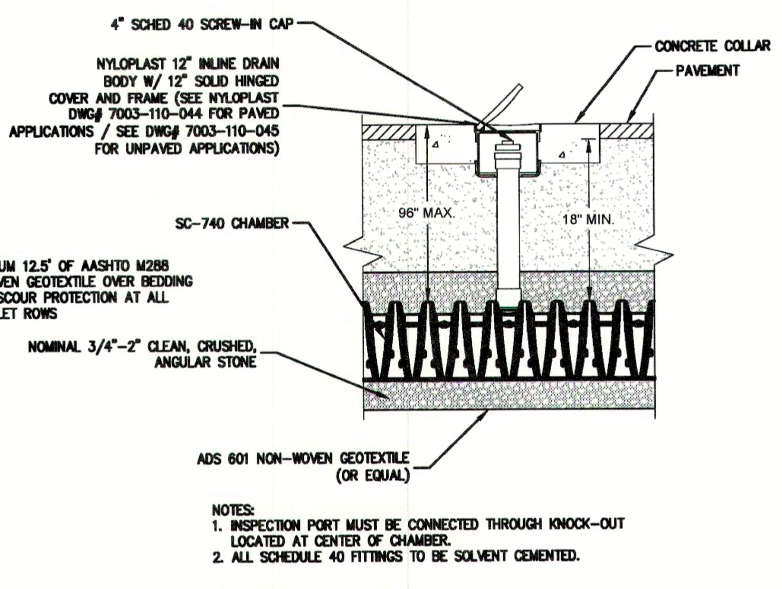

NOTES:
1. INSPECTION PORT MUST BE CONNECTED THROUGH KNOCK-OUT LOCATED AT CENTER OF CHAMBER.
2. ALL SCHEDULE 40 FITTINGS TO BE SOLVENT CEMENTED.

INSPECTION PORT DETAIL

ACCEPTABLE FILL MATERIALS: STORMTECH SC-740 CHAMBER SYSTEMS

MATERIAL LOCATION	DESCRIPTION	AASHTO M43 DESIGNATION[1]	COMPACTION/DENSITY REQUIREMENT
(d) FILL MATERIAL FOR LAYER 'D' STARTS FROM THE TOP OF THE 'C' LAYER TO THE BOTTOM OF FLEXIBLE PAVEMENT OR UNPAVED FINISH GRADE ABOVE. NOTE THAT PAVEMENT SUBBASE MAY BE PART OF THIS LAYER.	ANY SOIL/ROCK MATERIALS, NATIVE SOILS, OR PER ENGINEER'S PLANS. CHECK PLANS FOR PAVEMENT SUBGRADE REQUIREMENTS.	N/A	PREPARE PER ENGINEER'S PLANS. PAVED INSTALLATIONS MAY HAVE STRINGENT MATERIAL AND PREPARATION REQUIREMENTS.
(c) FILL MATERIAL FOR LAYER 'C' STARTS FROM THE TOP OF THE EMBEDMENT STONE ('B' LAYER) TO 18" ABOVE THE TOP OF THE CHAMBER. NOTE THAT PAVEMENT SUBBASE MAY BE A PART OF THIS LAYER.	GRANULAR WELL-GRADED SOIL/AGGREGATE MIXTURES, < 35% FINES. MOST PAVEMENT SUB-BASE MATERIALS CAN BE USED IN LIEU OF THIS LAYER.	3, 357, 4, 467, 5, 56, 57, 6, 67, 68, 7, 78, 8, 89, 9, 10	BEGIN COMPACTION AFTER 12" OF MATERIAL OVER THE CHAMBERS IS REACHED. COMPACT ADDITIONAL LAYERS IN 6" LIFTS TO A MIN. 95% STANDARD PROCTOR DENSITY. ROLLER GROSS VEHICLE WEIGHT NOT TO EXCEED 12,000 lbs. DYNAMIC FORCE NOT TO EXCEED 20,000 lbs.
(b) EMBEDMENT STONE SURROUNDING THE CHAMBERS FROM THE FOUNDATION STONE ('A' LAYER) TO THE 'C' LAYER ABOVE.	CLEAN, CRUSHED, ANGULAR STONE, NOMINAL SIZE DISTRIBUTION BETWEEN 3/4 - 2 INCH	3, 357, 4, 467, 5, 56, 57	NO COMPACTION REQUIRED.
(a) FOUNDATION STONE BELOW CHAMBERS FROM THE SUBGRADE UP TO THE FOOT (BOTTOM) OF THE CHAMBER.	CLEAN, CRUSHED, ANGULAR STONE, NOMINAL SIZE DISTRIBUTION BETWEEN 3/4 - 2 INCH	3, 35, 4, 467, 5, 56, 57	PLATE COMPACT OR ROLL TO ACHIEVE A 95% STANDARD PROCTOR DENSITY[2].

PLEASE NOTE:
1. THE LISTED AASHTO DESIGNATIONS ARE FOR GRADATIONS ONLY. THE STONE MUST ALSO BE CLEAN, CRUSHED, ANGULAR. FOR EXAMPLE, A SPECIFICATION FOR #4 STONE WOULD STATE: 'CLEAN, CRUSHED, ANGULAR NO. 4 (AASHTO M43) STONE'.

2. AS AN ALTERNATE TO PROCTOR TESTING AND FIELD DENSITY MEASUREMENTS ON OPEN GRADED STONE, STORMTECH COMPACTION REQUIREMENTS ARE MET FOR 'A' LOCATION MATERIALS WHEN PLACED AND COMPACTED IN 9"[229 mm] (MAX) LIFTS USING TWO FULL COVERAGES WITH AN APPROPRIATE COMPACTOR.

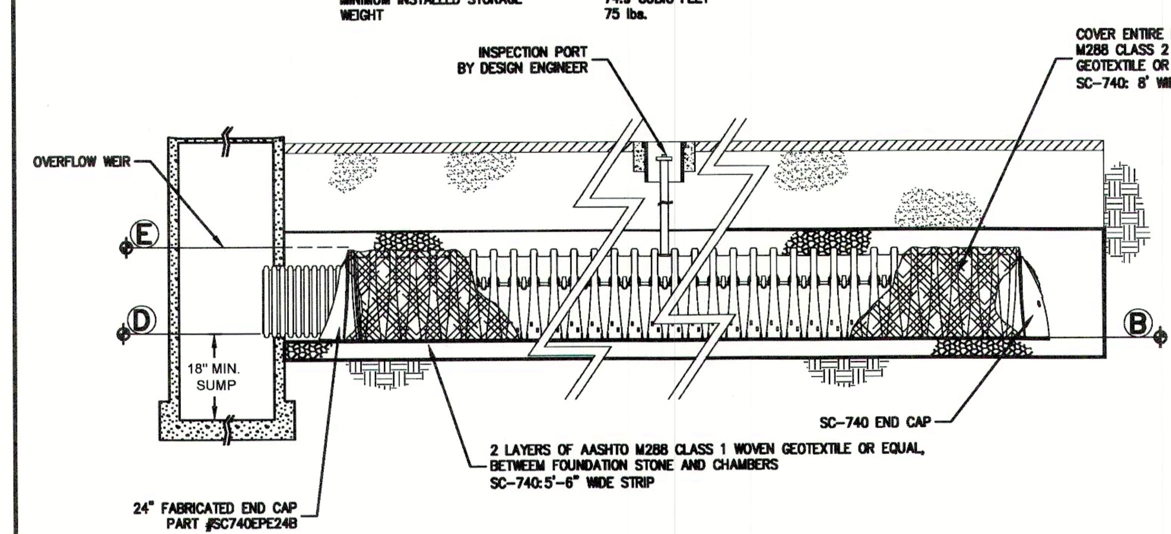

SECTION AT ISOLATOR ROW

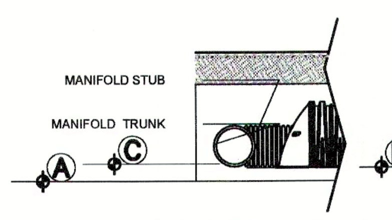

SECTION B-B

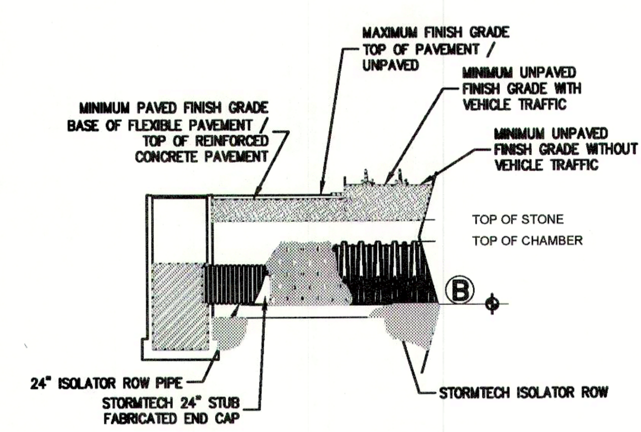

SECTION A-A

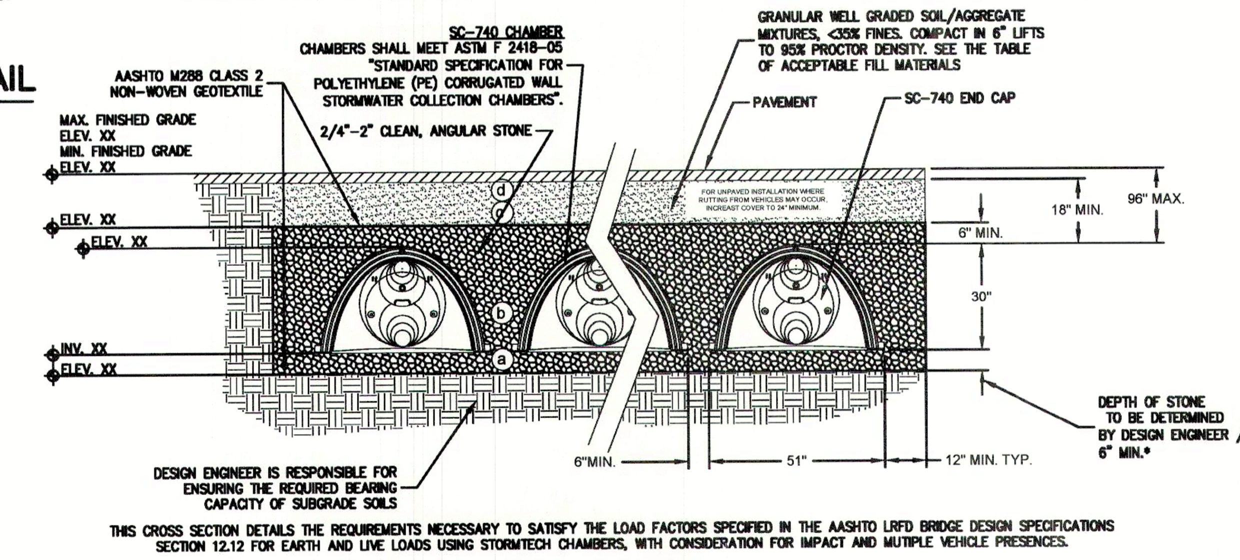

THIS CROSS SECTION DETAILS THE REQUIREMENTS NECESSARY TO SATISFY THE LOAD FACTORS SPECIFIED IN THE AASHTO LRFD BRIDGE DESIGN SPECIFICATIONS SECTION 12.12 FOR EARTH AND LIVE LOADS USING STORMTECH CHAMBERS, WITH CONSIDERATION FOR IMPACT AND MULTIPLE VEHICLE PRESENCES.

SECTION AT DETENTION AND WATER QUALITY CONTROL

STORMTECH CHAMBERS SC-740

23

END CAP

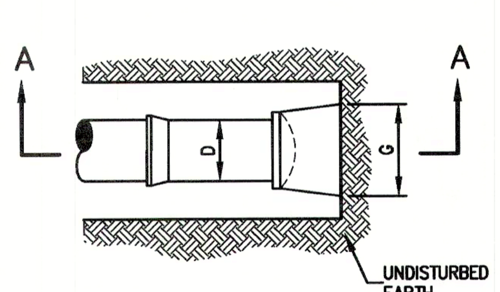

PLAN VIEW

TEE

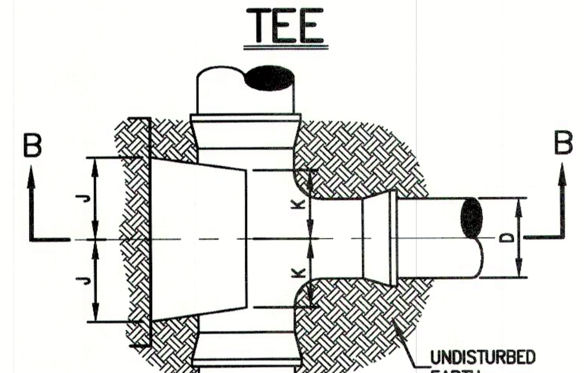

PLAN VIEW

HORIZONTAL BEND

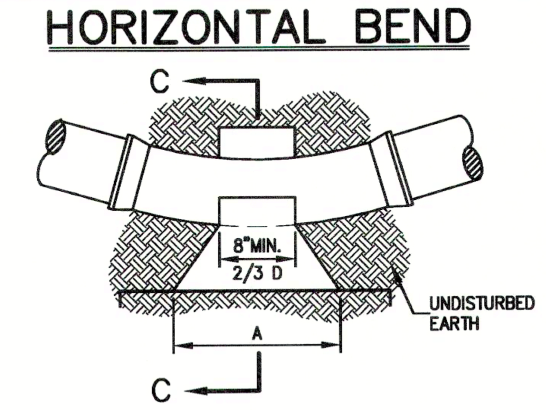

PLAN VIEW

VERTICAL BEND

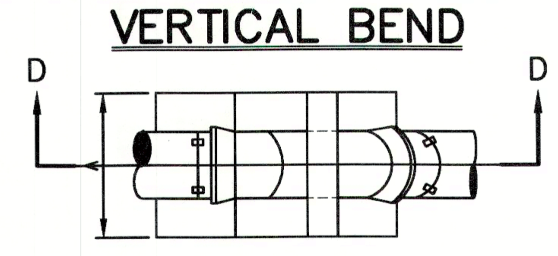

PLAN VIEW

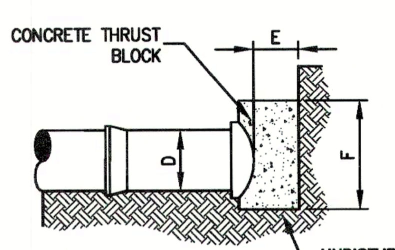

SECTION A-A

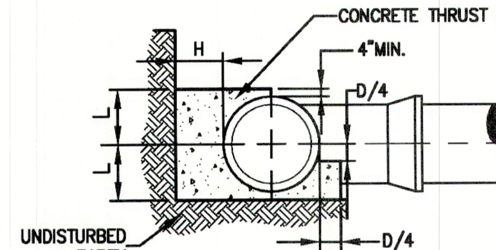

SECTION B-B

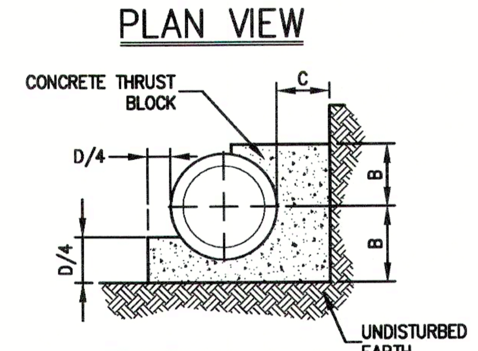

SECTION C-C

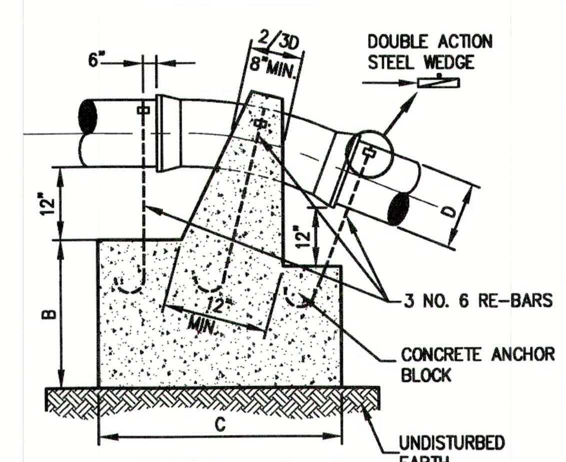

SECTION D-D

END CAP CHART

D	4"	6"	8"	10"	12"
E	6"	6"	8"	8"	10"
F	12"	12"	1'-4"	1'-8"	2'-0"
G	1'-5"	1'-5"	2'-0"	2'-5"	3'-0"

TEE CHART

D	4"	6"	8"	10"	12"
H	6"	7"	9"	10"	12"
L	8"	8"	10"	12"	1'-3"
J	7"	7"	9"	12"	1'-2"
K	6"	6"	8"	8"	8"

HORIZONTAL BEND CHART

BEND (DEGREES)		DIAMETER (D) 4"	6"	8"	10"	12"
1/32 (11¼°)	A	8"	8"	8"	10"	12"
	B	7"	7"	8"	9"	10"
	C	7"	7"	7"	8"	8"
1/16 (22½°)	A	9"	9"	12"	1'-6"	1'-9"
	B	7"	7"	8"	9"	10"
	C	8"	8"	9"	10"	11"
1/8 (45°)	A	1'-3"	1'-3"	1'-8"	2'-1"	2'-6"
	B	7"	7"	8"	9"	11"
	C	8"	8"	9"	10"	11"
1/4 (90°)	A	2'-0"	2'-0"	2'-6"	3'-0"	3'-6"
	B	7"	7"	9"	12"	1'-3"
	C	2'-0"	2'-0"	1'-9"	1'-8"	1'-7"

VERTICAL BEND CHART

BEND (DEGREES)		DIAMETER (D) 4"	6"	8"	10"	12"	16"
1/32 (11¼°)	A	1'-6"	1'-6"	2'-0"	2'-6"	3'-0"	3'-6"
	B	1'-3"	1'-3"	1'-9"	1'-3"	2'-0"	2'-0"
	C	2'-0"	2'-0"	2'-6"	2'-9"	3'-0"	4'-0"
1/16 (22½°)	A	2'-0"	2'-0"	3'-4"	3'-8"	4'-0"	4'-4"
	B	1'-9"	1'-9"	2'-3"	2'-6"	2'-6"	2'-6"
	C	2'-6"	2'-6"	2'-8"	4'-0"	4'-0"	5'-6"
1/8 (45°)	A	2'-6"	2'-6"	3'-0"	4'-0"	4'-6"	5'-2"
	B	2'-6"	2'-6"	2'-9"	3'-0"	3'-6"	4'-0"
	C	3'-0"	3'-0"	4'-0"	4'-6"	4'-9"	6'-6"

NOTES:
1. ALL CONCRETE TO BE CLASS A (4,000 PSI).
2. ALL DIMENSIONS ARE MINIMUMS; ALL ANCHOR AND THRUST BLOCKS SHALL BEAR ON UNDISTURBED EARTH.
3. IN ALL CASES SHOWN, MEASUREMENT "D" REFERS TO THE INSIDE PIPE DIAMETER.
4. ANCHOR AND THRUST BLOCK DIMENSIONS SHOWN ARE MINIMUM FOR 100 PSI WATER PRESSURE AND SOIL RESISTANCE OF 2 KIPS PER SQ FT. CONTRACTOR SHALL ADJUST FOR OTHER CONDITIONS AND SUBMIT FOR APPROVAL.
5. IF THE OWNER OF THE WATER SYSTEM REQUIRES A METHOD THAT RESTRAINS INDIVIDUAL JOINTS, EACH JOINT THAT FALLS WITHIN THE MINIMUM RESTRAINED LENGTH, MEASURED FROM THE CENTER OF THE FITTING, AS SHOWN ON THESE SHEETS SHALL BE RESTRAINED, AND SHALL WITHSTAND THE MAXIMUM PRESSURE APPLIED TO THE SYSTEM.
6. CLASS A CONCRETE SHALL NOT BE PLACED UNDER WATER. THE CONTRACTOR SHALL DEWATER THE EXCAVATION OR PLACE TYPE G CONCRETE USING APPROPRIATE UNDERWATER PLACEMENT TECHNIQUES.
7. CONCRETE FOR THRUST BLOCKS SHALL NOT BE ALLOWED TO COVER OR INTERFERE WITH JOINT OR RESTRAINT HARDWARE, PLASTIC SHEETING OR BUILDING FELT MAY BE PLACED OVER PIPE OR FITTINGS TO PREVENT CONCRETE FROM ADHERING TO SURFACES.
8. FOR BENDS, BEARING AREA SHALL BE PARALLEL TO THE EDGE OF THE FITTING AT THE FITTING MIDPOINT.
9. FOR TEES, BEARING AREA SHALL BE PERPENDICULAR TO THE BRANCH (SINGLE LEG) AXIS.
10. FOR REDUCERS, BEARING AREA SHALL BE PERPENDICULAR TO THE FITTING AXIS. THE MINIMUM THICKNESS ALONG THE FITTING AXIS SHALL BE 1'-0" OR THE LENGTH BETWEEN THE BELLS, WHICHEVER IS SMALLER.
11. THRUST RESTRAINTS FOR SIZES OR FITTINGS NOT SHOWN ON THESE SHEETS WILL BE DESIGNED ON A CASE BY CASE BASIS, AND WILL BE SHOWN IN THE CONTRACT DOCUMENTS.

ANCHOR AND THRUST BLOCKS

24

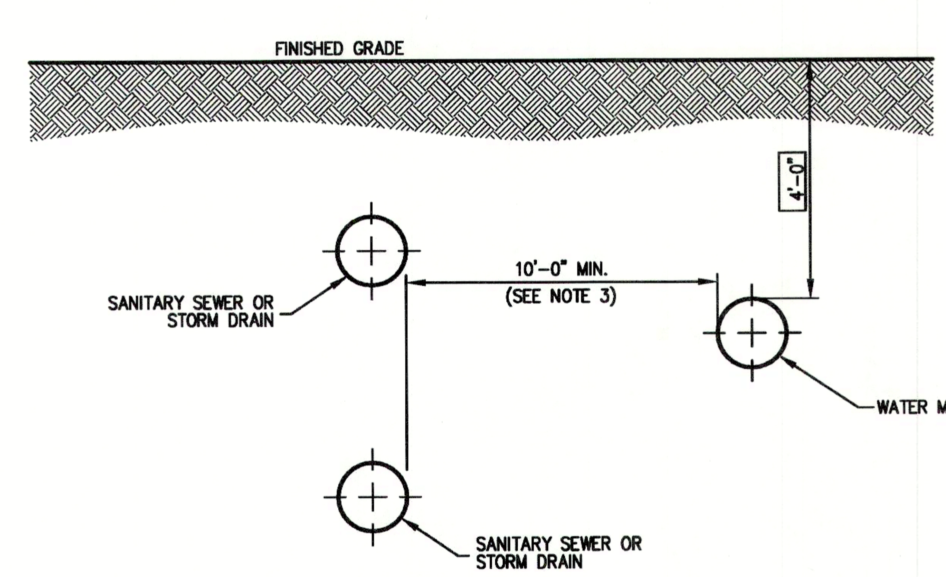

HORIZONTAL SEPARATION

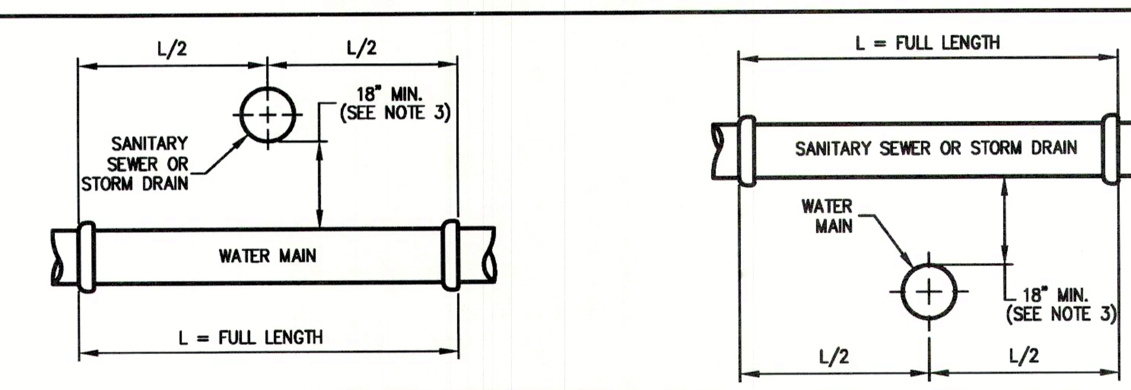

SANITARY SEWER OR STORM DRAIN OVER WATER MAIN

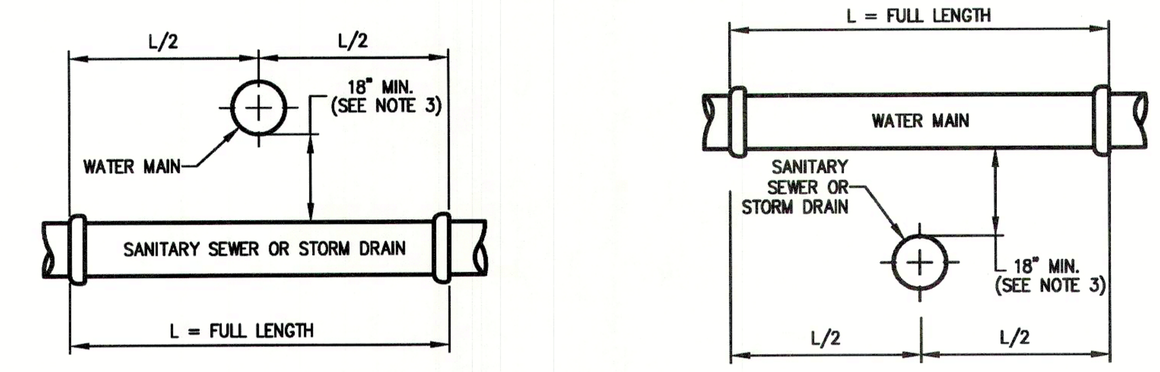

WATER MAIN OVER SANITARY SEWER OR STORM DRAIN

VERTICAL SEPARATION

NOTES:

1. NORMAL CONDITIONS:
   A. WHENEVER A WATER MAIN MUST CROSS OVER OR UNDER A SANITARY SEWER OR STORM DRAIN, THE PIPES SHALL BE LAID TO PROVIDE A VERTICAL SEPARATION BETWEEN THEM OF AT LEAST 18 INCHES, AS MEASURED FROM THE BOTTOM OF THE HIGHER PIPE TO THE CROWN OF THE LOWER PIPE.
   B. FULL LENGTH OF WATER PIPE MUST BE CENTERED AT THE POINT OF CROSSING; NO JOINTS WILL BE PERMITTED AT THE POINT OF CROSSING.
2. WATER MAIN CROSSING UNDER SANITARY SEWERS:
   A. VERTICAL SEPARATION OF 18 INCHES MUST BE PROVIDED.
   B. ADEQUATE STRUCTURAL SUPPORT MUST BE PROVIDED FOR THE SANITARY SEWER TO PREVENT EXCESSIVE DEFLECTION OF JOINTS AND SETTLING.
   C. FULL LENGTH OF WATER PIPE MUST BE CENTERED AT THE POINT OF CROSSING; NO JOINTS WILL BE PERMITTED AT THE POINT OF CROSSING.
3. IF DURING CONSTRUCTION IT IS FOUND THAT THE REQUIRED SEPARATION OF WATER MAINS, SANITARY SEWERS, STORM SEWERS AND BUILDING SANITARY SEWERS CANNOT BE MET, THE CONTRACTOR OR HIS AUTHORIZED REPRESENTATIVE SHALL IN WRITING ADVISE JMC PLLC OF THE SPECIFIC CONDITIONS ENCOUNTERED. APPROVAL OF ALTERNATIVE SEPARATION CRITERIA SHALL BE OBTAINED FROM THE WESTCHESTER COUNTY DEPARTMENT OF HEALTH PRIOR TO INSTALLATION.

SEPARATION OF WATER AND SANITARY SEWER/STORM DRAIN LINES

25

No.	Revision	Date
1.	WCDOH SUBMISSION	08/03/2020
2.	RESPONSE TO WCDOH COMMENTS	10/06/2020
3.	TOWN HIGHWAY DEPARTMENT SUBMISSION	12/15/2020
4.	ISSUED FOR BUILDING PERMIT	03/12/2021

Previous Editions Obsolete

JMC Planning, Engineering, Landscape Architecture & Land Surveying, PLLC
JMC Site Development Consultants, LLC
John Meyer Consulting, Inc.
120 BEDFORD ROAD • ARMONK, NY 10504
voice 914.273.5225 • fax 914.273.2102
www.jmcpllc.com

JMC

CONSTRUCTION DETAILS

500 COMMERCE STREET REDEVELOPMENT
500 COMMERCE STREET
HAWTHORNE, NY 10532

ANY ALTERATION OF PLANS, SPECIFICATIONS, PLATS AND REPORTS BEARING THE SEAL OF A LICENSED PROFESSIONAL ENGINEER OR LICENSED LAND SURVEYOR IS A VIOLATION OF SECTION 7209 OF THE NEW YORK STATE EDUCATION LAW, EXCEPT AS PROVIDED FOR BY SECTION 7209, SUBSECTION 2.

STATE OF NEW YORK · ROBERT ... · LICENSED PROFESSIONAL ENGINEER · 078390

Drawn: JR	Approved: RA
Scale:	NOT TO SCALE
Date:	01/06/2020
Project No:	18158
18158-DETAILS	C-903
Drawing No:	C-903

COPYRIGHT © 2021 by JMC All Rights Reserved. No part of this document may be reproduced, stored in a retrieval system, or transmitted in any form or by any means, electronic, mechanical, photocopying, recording or otherwise, without the prior written permission of JMC PLANNING, ENGINEERING, LANDSCAPE ARCHITECTURE & LAND SURVEYING, PLLC | JMC SITE DEVELOPMENT CONSULTANTS, LLC | JOHN MEYER CONSULTING, INC. (JMC). Any modifications or alterations to this document without the written permission of JMC shall render them invalid and unusable.

NOT FOR CONSTRUCTION

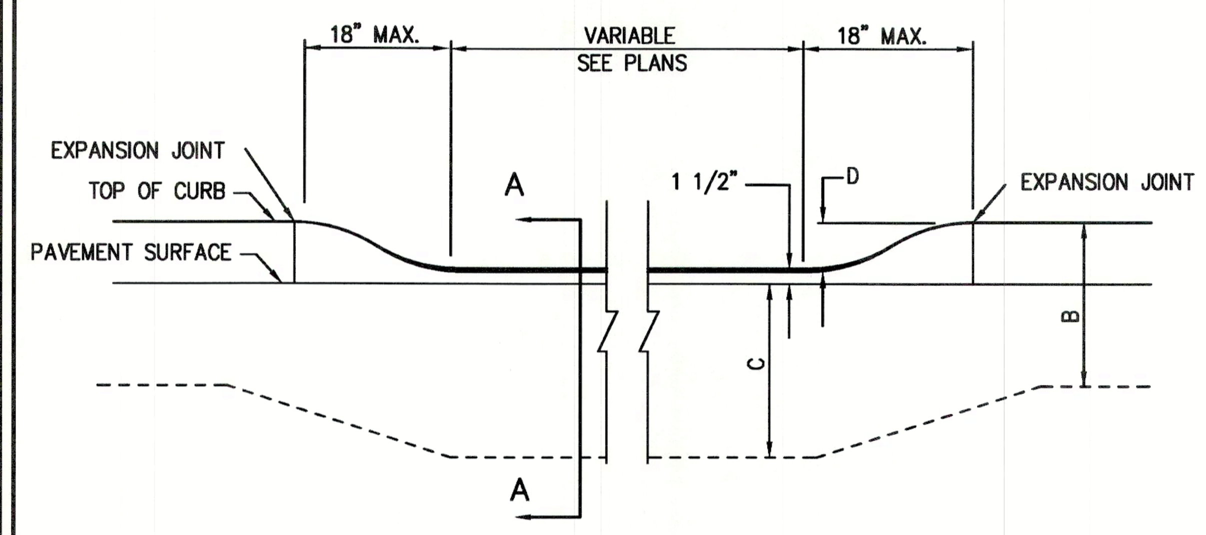

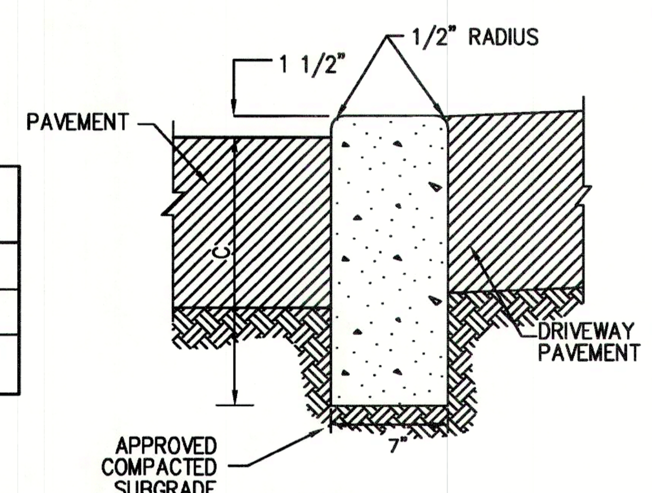

CURB SIZE	DIM. B	DIM. C	DIM. D
7" X 18"	18"	16"	4 1/2"
9" X 20"	20"	18"	4 1/2"
9" X 22"	22"	20"	4 1/2"

SECTION A–A

METHOD OF DEPRESSING CURB AT DRIVEWAYS

DEPRESSED CONCRETE CURB — 26

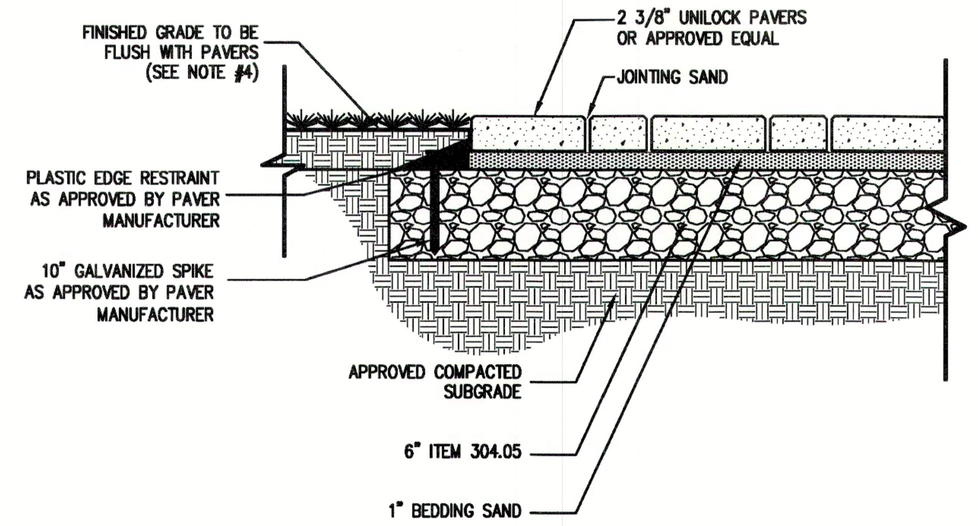

NOTES:

1. MINIMUM CROSS SLOPE SHALL BE 1/4" PER FOOT UNLESS OTHERWISE INDICATED ON DRAWINGS.
2. THICKNESSES INDICATED REFER TO COMPACTED MEASURE.
3. ALL DISTURBED AREAS ADJACENT TO SIDEWALKS SHALL BE TOPSOILED (4" DEPTH) AND SEEDED WITH GRASS.

PAVER INSTALLATION (PROPOSED WALKWAY) — 27

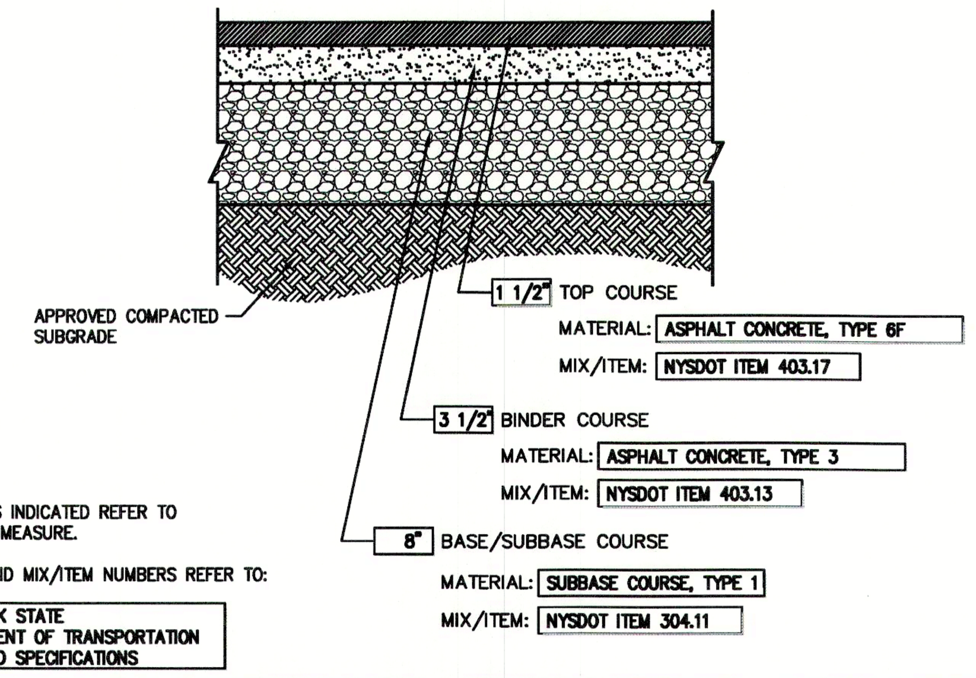

NOTES:

1. THICKNESSES INDICATED REFER TO COMPACTED MEASURE.
2. MATERIAL AND MIX/ITEM NUMBERS REFER TO:

NEW YORK STATE DEPARTMENT OF TRANSPORTATION STANDARD SPECIFICATIONS

SITE PAVEMENT (Heavy Duty) — 28

NOTES:

1. INSTALL 1/2" PREMOLDED BITUMINOUS EXPANSION JOINT EVER 20 FEET.
2. UNLESS DIRECTED OTHERWISE, EXPANSION JOINTS SHALL ALSO BE INSTALLED AT THE PC AND PT OF ALL RADIUS CURB.
3. EACH EXPANSION JOINT SHALL BE LEFT EXPOSED AND NOT COVERED WITH A SKIM COAT OF CONCRETE.
4. INSTALL CONSTRUCTION JOINTS MID-WAY BETWEEN EXPANSION JOINTS SO THAT LENGTH OF CURB SEGMENTS WILL BE TEN (10) FEET.
5. LENGTH OF CURB SEGMENTS AT CLOSURES MAY BE VARIED BUT SHALL NOT BE LESS THAN FOUR (4) FEET.
6. WHEN INSTALLED ADJACENT TO SIDEWALK OR CONCRETE PAVEMENT, MATCH EXPANSION JOINTS.

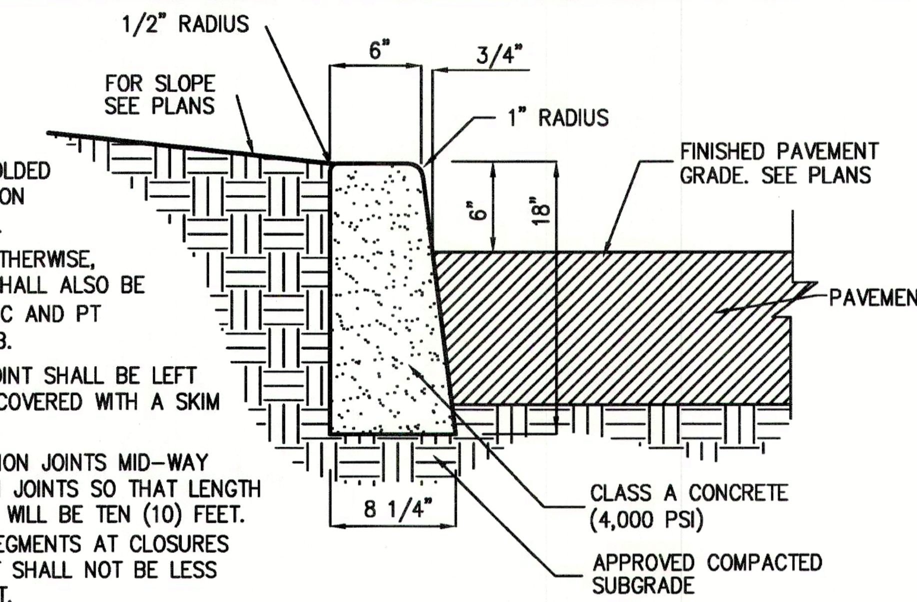

CAST–IN–PLACE CONCRETE CURB — 29A

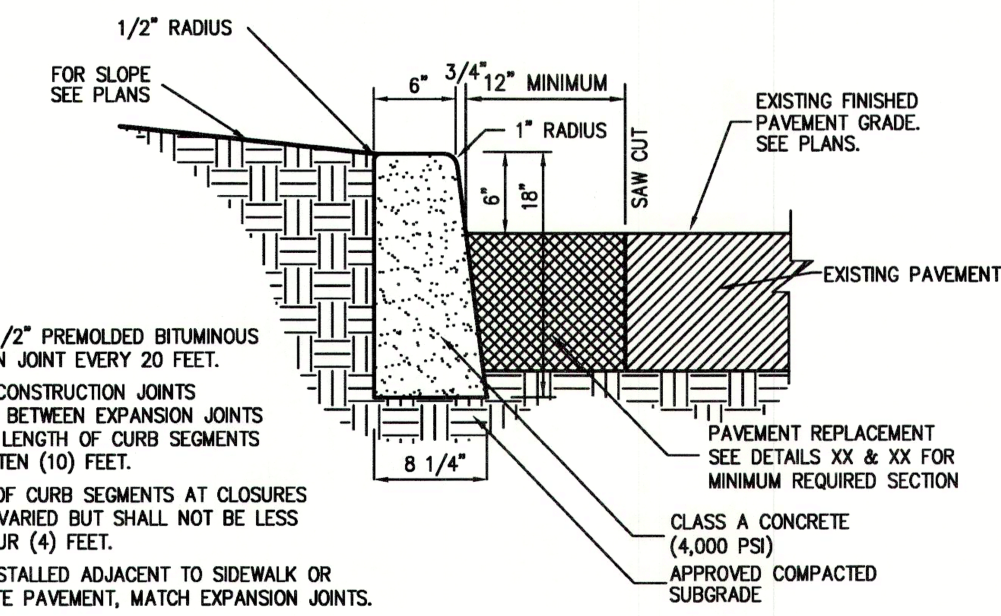

NOTES:

1. INSTALL 1/2" PREMOLDED BITUMINOUS EXPANSION JOINT EVER 20 FEET.
2. INSTALL CONSTRUCTION JOINTS MID-WAY BETWEEN EXPANSION JOINTS SO THAT LENGTH OF CURB SEGMENTS WILL BE TEN (10) FEET.
3. LENGTH OF CURB SEGMENTS AT CLOSURES MAY BE VARIED BUT SHALL NOT BE LESS THAN FOUR (4) FEET.
4. WHEN INSTALLED ADJACENT TO SIDEWALK OR CONCRETE PAVEMENT, MATCH EXPANSION JOINTS.

CAST–IN–PLACE CONCRETE CURB (IN EXISTING PAVEMENT) — 29B

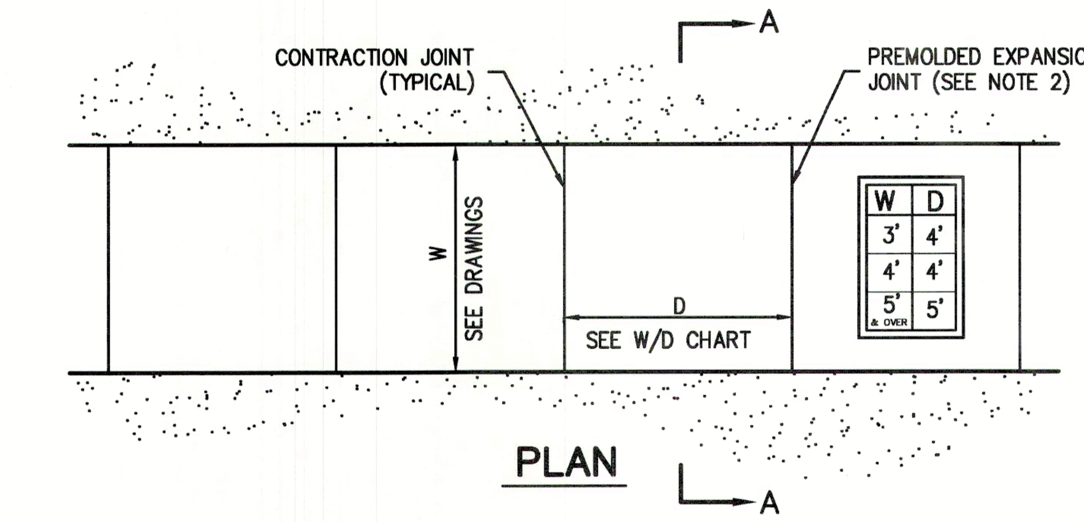

PLAN

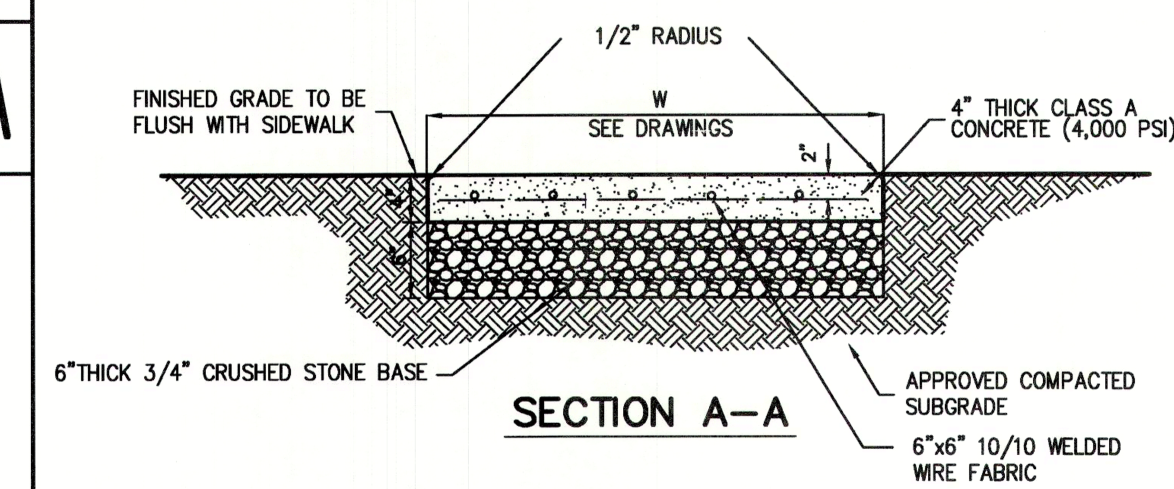

SECTION A–A

NOTES:

1. SIDEWALK CROSS SLOPE SHALL BE 1% MIN. TO 2% MAX.
2. PROVIDE 1/2" PREMOLDED EXPANSION JOINTS AT 20' INTERVALS UNLESS OTHERWISE DIRECTED.
3. REINFORCING SHALL NOT EXTEND THROUGH EXPANSION JOINTS.
4. SIDEWALK SHALL HAVE LIGHT BROOM FINISH

CONCRETE SIDEWALK — 30

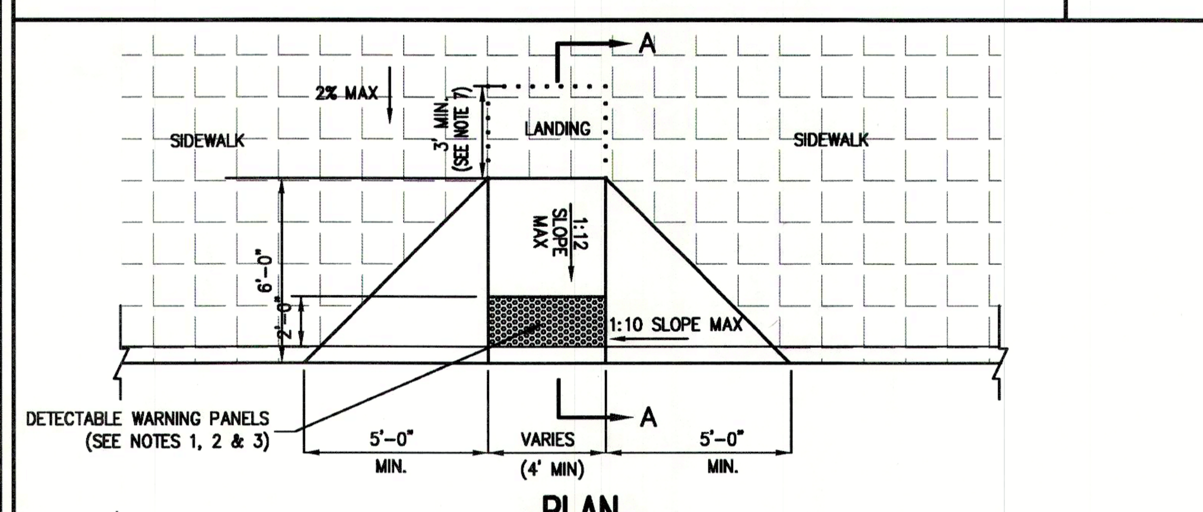

PLAN

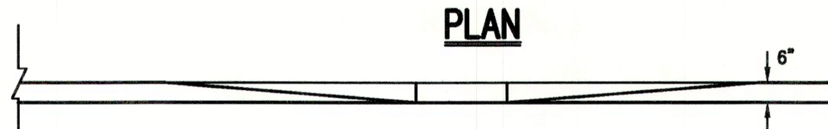

ELEVATION

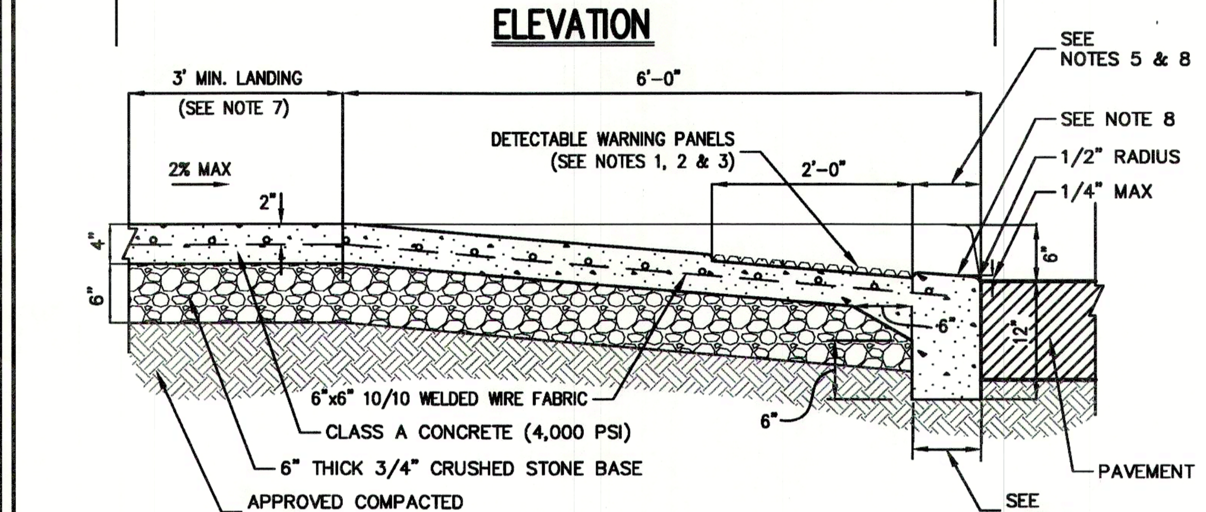

SECTION A–A

NOTES:

1. RAMPS SHALL HAVE CAST IN PLACE DETECTABLE/TACTILE WARNING SURFACE TILES AS MANUFACTURED BY ARMOR–TILE (OR APPROVED EQUAL) AND SHALL CONSIST OF RAISED TRUNCATED DOMES WITH A DIAMETER OF NOMINAL 0.9 INCHES, A HEIGHT OF NOMINAL 0.2 INCHES AND A CENTER TO CENTER SPACING OF NOMINAL 2.35 INCHES.
2. DETECTABLE WARNING PANELS SHALL CONTRAST VISUALLY WITH ADJOINING SURFACES, EITHER LIGHT–ON–DARK OR DARK–ON–LIGHT IN ACCORDANCE WITH SECTION 4.29.2, FEDERAL REGISTER, VOLUME 56, NO. 144, RULES AND REGULATIONS, APPENDIX A TO PART 36 – STANDARDS FOR ACCESSIBLE DESIGN (AMERICANS WITH DISABILITIES ACT), LATEST EDITION.
3. 24" WIDTH OF PANELS TO BE INSTALLED DIRECTLY BEHIND CURB AND IN ACCORDANCE WITH MANUFACTURER'S SPECIFICATIONS.
4. A MINIMUM OF 3 FEET CLEAR SHALL BE MAINTAINED AT ANY PERMANENT OBSTACLE IN ACCESSIBLE ROUTE (I.E., HYDRANTS, UTILITY POLES, TREE WELLS, SIGNS, ETC.).
5. CURB TREATMENT VARIES, SEE PLANS FOR CURB TYPE AND SEE CURB DETAIL FOR DIMENSIONS.
6. RAMP, CURB AND ADJACENT PAVEMENTS SHALL BE GRADED TO PREVENT PONDING.
7. WHEN LANDING OF RAMP ADJOINS A DOORWAY THEN THE MINIMUM DOORWAY MANEUVERING AREA SHALL BE AT LEAST THE WIDTH OF THE DOORWAY AND SHALL HAVE A MINIMUM DEPTH OF:
   MANUAL SWING DOORS = 60" MIN.
   FULL POWERED AUTOMATIC SLIDING DOORS = 48" MIN.
8. CONTRACTOR TO ENSURE TOP OF CURB MATCHES SLOPE OF RAMP.

DROP CURB & RAMP (SITE DRIVEWAY) — 31

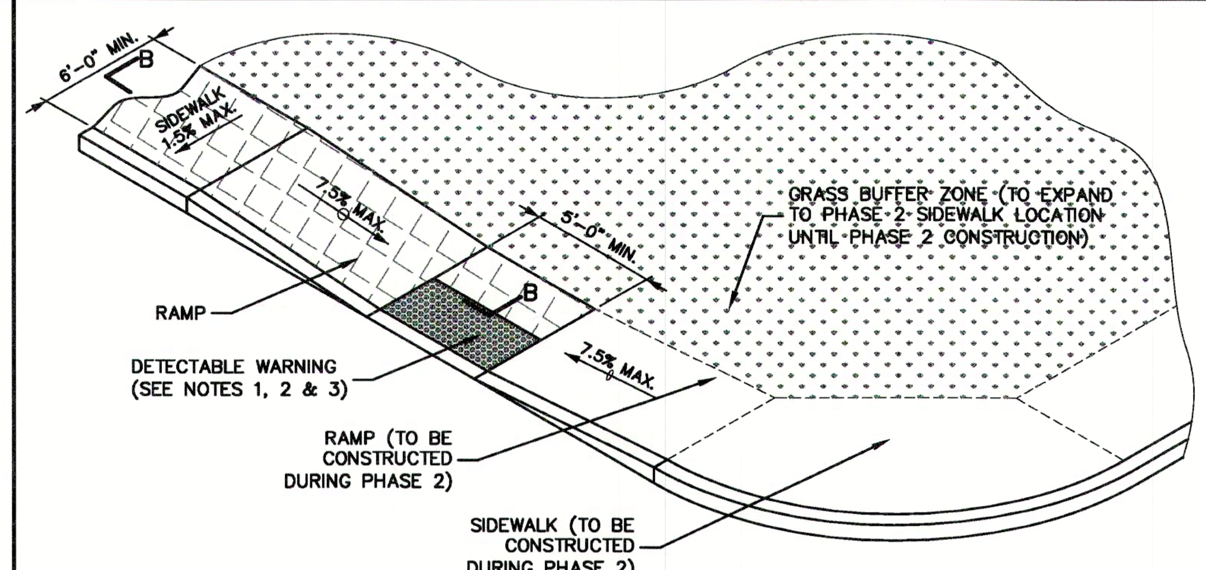

PLAN

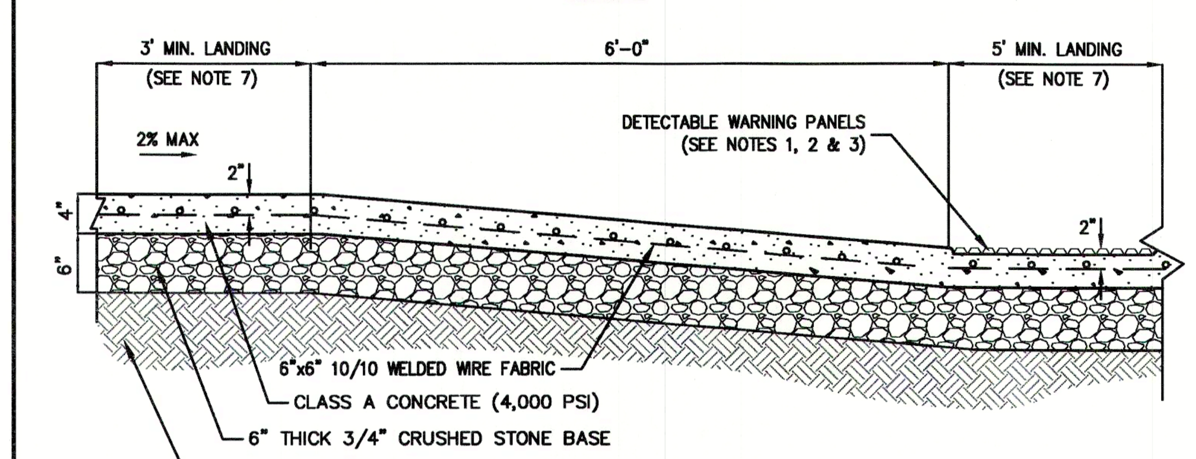

SECTION B–B

NOTES:

1. RAMPS SHALL HAVE CAST IN PLACE DETECTABLE/TACTILE WARNING SURFACE TILES AS MANUFACTURED BY ARMOR–TILE (OR APPROVED EQUAL) AND SHALL CONSIST OF RAISED TRUNCATED DOMES WITH A DIAMETER OF NOMINAL 0.9 INCHES, A HEIGHT OF NOMINAL 0.2 INCHES AND A CENTER TO CENTER SPACING OF NOMINAL 2.35 INCHES.
2. DETECTABLE WARNING PANELS SHALL CONTRAST VISUALLY WITH ADJOINING SURFACES, EITHER LIGHT–ON–DARK OR DARK–ON–LIGHT IN ACCORDANCE WITH SECTION 4.29.2, FEDERAL REGISTER, VOLUME 56, NO. 144, RULES AND REGULATIONS, APPENDIX A TO PART 36 – STANDARDS FOR ACCESSIBLE DESIGN (AMERICANS WITH DISABILITIES ACT), LATEST EDITION.
3. 24" WIDTH OF PANELS TO BE INSTALLED DIRECTLY BEHIND CURB AND IN ACCORDANCE WITH MANUFACTURER'S SPECIFICATIONS.
4. A MINIMUM OF 3 FEET CLEAR SHALL BE MAINTAINED AT ANY PERMANENT OBSTACLE IN ACCESSIBLE ROUTE (I.E., HYDRANTS, UTILITY POLES, TREE WELLS, SIGNS, ETC.).
5. CURB TREATMENT VARIES, SEE PLANS FOR CURB TYPE AND SEE CURB DETAIL FOR DIMENSIONS.
6. RAMP, CURB AND ADJACENT PAVEMENTS SHALL BE GRADED TO PREVENT PONDING.
7. WHEN LANDING OF RAMP ADJOINS A DOORWAY THEN THE MINIMUM DOORWAY MANEUVERING AREA SHALL BE AT LEAST THE WIDTH OF THE DOORWAY AND SHALL HAVE A MINIMUM DEPTH OF:
   MANUAL SWING DOORS = 60" MIN.
   FULL POWERED AUTOMATIC SLIDING DOORS = 48" MIN.
8. CONTRACTOR TO ENSURE TOP OF CURB MATCHES SLOPE OF RAMP.
9. IN ACCORDANCE WITH ADA STANDARDS, ANY ALTERATIONS WHERE COMPLIANCE WITH APPLICABLE REQUIREMENTS IS TECHNICALLY INFEASIBLE, THE ALTERATION SHALL COMPLY WITH THE REQUIREMENTS TO THE MAXIMUM EXTENT FEASIBLE. IN THESE CIRCUMSTANCES, THE ALTERATION SHALL PROVIDE THE MAXIMUM PHYSICAL ACCESSIBILITY FEASIBLE.

DROP CURB & RAMP (GARFIELD PLACE & COMMERCE STREET) — 32

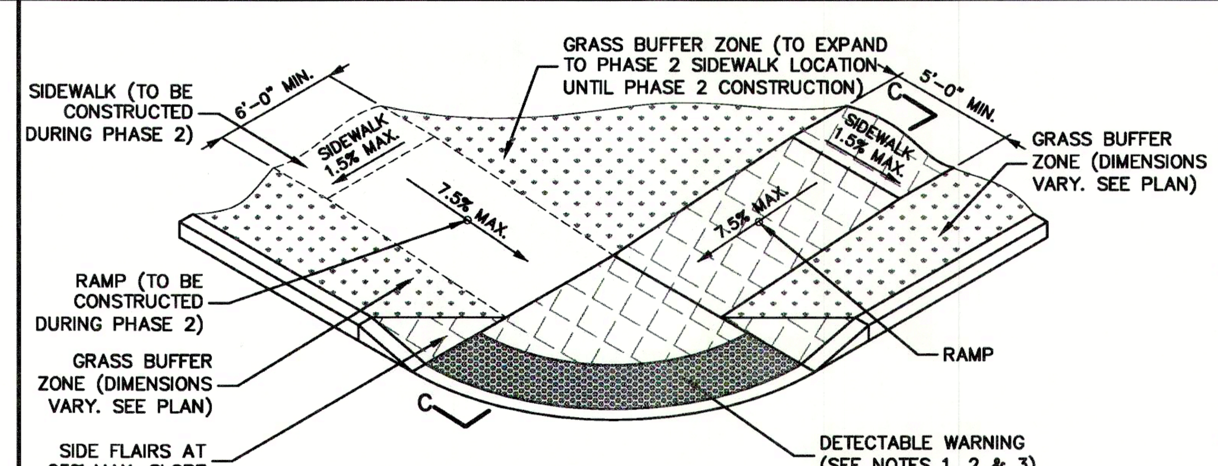

PLAN

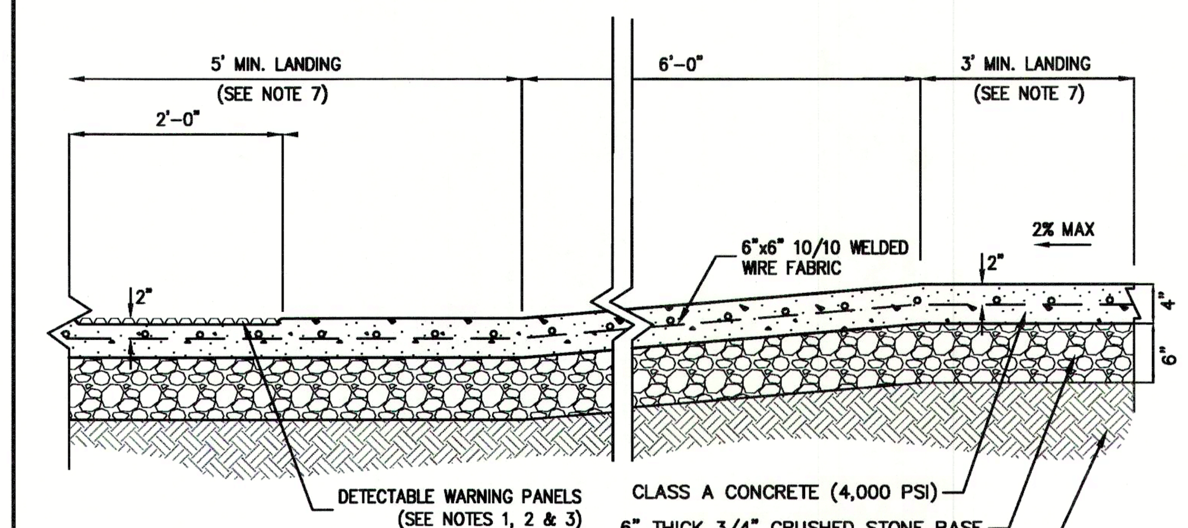

SECTION C–C

NOTES:

1. RAMPS SHALL HAVE CAST IN PLACE DETECTABLE/TACTILE WARNING SURFACE TILES AS MANUFACTURED BY ARMOR–TILE (OR APPROVED EQUAL) AND SHALL CONSIST OF RAISED TRUNCATED DOMES WITH A DIAMETER OF NOMINAL 0.9 INCHES, A HEIGHT OF NOMINAL 0.2 INCHES AND A CENTER TO CENTER SPACING OF NOMINAL 2.35 INCHES.
2. DETECTABLE WARNING PANELS SHALL CONTRAST VISUALLY WITH ADJOINING SURFACES, EITHER LIGHT–ON–DARK OR DARK–ON–LIGHT IN ACCORDANCE WITH SECTION 4.29.2, FEDERAL REGISTER, VOLUME 56, NO. 144, RULES AND REGULATIONS, APPENDIX A TO PART 36 – STANDARDS FOR ACCESSIBLE DESIGN (AMERICANS WITH DISABILITIES ACT), LATEST EDITION.
3. 24" WIDTH OF PANELS TO BE INSTALLED DIRECTLY BEHIND CURB AND IN ACCORDANCE WITH MANUFACTURER'S SPECIFICATIONS.
4. A MINIMUM OF 3 FEET CLEAR SHALL BE MAINTAINED AT ANY PERMANENT OBSTACLE IN ACCESSIBLE ROUTE (I.E., HYDRANTS, UTILITY POLES, TREE WELLS, SIGNS, ETC.).
5. CURB TREATMENT VARIES, SEE PLANS FOR CURB TYPE AND SEE CURB DETAIL FOR DIMENSIONS.
6. RAMP, CURB AND ADJACENT PAVEMENTS SHALL BE GRADED TO PREVENT PONDING.
7. WHEN LANDING OF RAMP ADJOINS A DOORWAY THEN THE MINIMUM DOORWAY MANEUVERING AREA SHALL BE AT LEAST THE WIDTH OF THE DOORWAY AND SHALL HAVE A MINIMUM DEPTH OF:
   MANUAL SWING DOORS = 60" MIN.
   FULL POWERED AUTOMATIC SLIDING DOORS = 48" MIN.
8. CONTRACTOR TO ENSURE TOP OF CURB MATCHES SLOPE OF RAMP.
9. IN ACCORDANCE WITH ADA STANDARDS, ANY ALTERATIONS WHERE COMPLIANCE WITH APPLICABLE REQUIREMENTS IS TECHNICALLY INFEASIBLE, THE ALTERATION SHALL COMPLY WITH THE REQUIREMENTS TO THE MAXIMUM EXTENT FEASIBLE. IN THESE CIRCUMSTANCES, THE ALTERATION SHALL PROVIDE THE MAXIMUM PHYSICAL ACCESSIBILITY FEASIBLE.

DROP CURB & RAMP (LIBERTY STREET & COMMERCE STREET) — 33

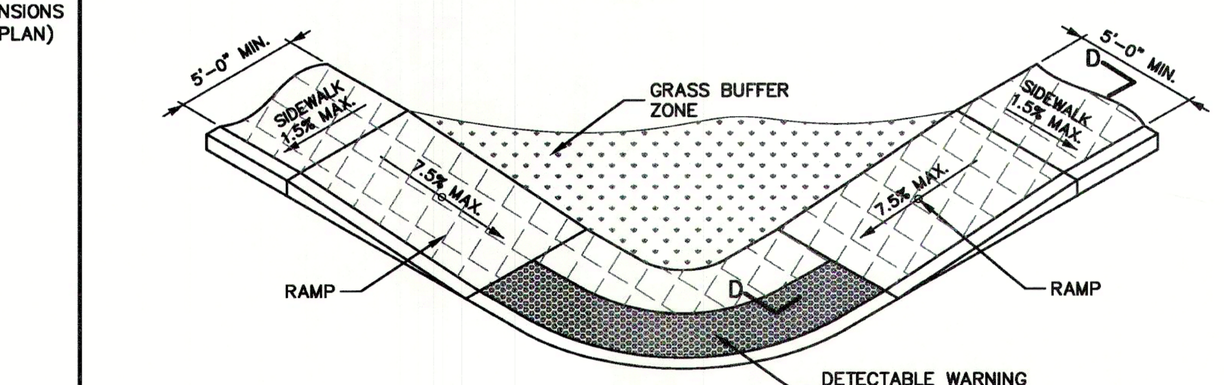

PLAN

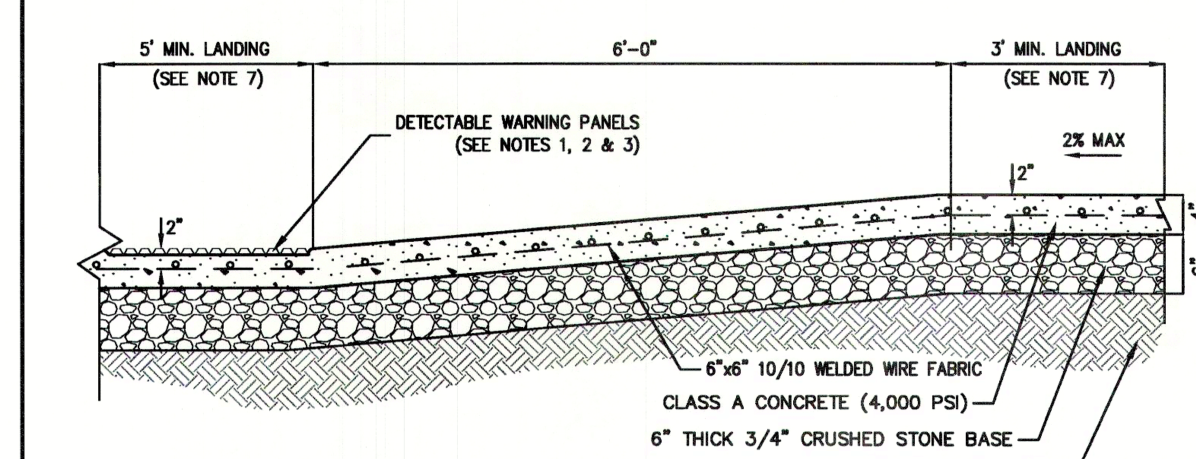

SECTION D–D

NOTES:

1. RAMPS SHALL HAVE CAST IN PLACE DETECTABLE/TACTILE WARNING SURFACE TILES AS MANUFACTURED BY ARMOR–TILE (OR APPROVED EQUAL) AND SHALL CONSIST OF RAISED TRUNCATED DOMES WITH A DIAMETER OF NOMINAL 0.9 INCHES, A HEIGHT OF NOMINAL 0.2 INCHES AND A CENTER TO CENTER SPACING OF NOMINAL 2.35 INCHES.
2. DETECTABLE WARNING PANELS SHALL CONTRAST VISUALLY WITH ADJOINING SURFACES, EITHER LIGHT–ON–DARK OR DARK–ON–LIGHT IN ACCORDANCE WITH SECTION 4.29.2, FEDERAL REGISTER, VOLUME 56, NO. 144, RULES AND REGULATIONS, APPENDIX A TO PART 36 – STANDARDS FOR ACCESSIBLE DESIGN (AMERICANS WITH DISABILITIES ACT), LATEST EDITION.
3. 24" WIDTH OF PANELS TO BE INSTALLED DIRECTLY BEHIND CURB AND IN ACCORDANCE WITH MANUFACTURER'S SPECIFICATIONS.
4. A MINIMUM OF 3 FEET CLEAR SHALL BE MAINTAINED AT ANY PERMANENT OBSTACLE IN ACCESSIBLE ROUTE (I.E., HYDRANTS, UTILITY POLES, TREE WELLS, SIGNS, ETC.).
5. CURB TREATMENT VARIES, SEE PLANS FOR CURB TYPE AND SEE CURB DETAIL FOR DIMENSIONS.
6. RAMP, CURB AND ADJACENT PAVEMENTS SHALL BE GRADED TO PREVENT PONDING.
7. WHEN LANDING OF RAMP ADJOINS A DOORWAY THEN THE MINIMUM DOORWAY MANEUVERING AREA SHALL BE AT LEAST THE WIDTH OF THE DOORWAY AND SHALL HAVE A MINIMUM DEPTH OF:
   MANUAL SWING DOORS = 60" MIN.
   FULL POWERED AUTOMATIC SLIDING DOORS = 48" MIN.
8. CONTRACTOR TO ENSURE TOP OF CURB MATCHES SLOPE OF RAMP.
9. IN ACCORDANCE WITH ADA STANDARDS, ANY ALTERATIONS WHERE COMPLIANCE WITH APPLICABLE REQUIREMENTS IS TECHNICALLY INFEASIBLE, THE ALTERATION SHALL COMPLY WITH THE REQUIREMENTS TO THE MAXIMUM EXTENT FEASIBLE. IN THESE CIRCUMSTANCES, THE ALTERATION SHALL PROVIDE THE MAXIMUM PHYSICAL ACCESSIBILITY FEASIBLE.

DROP CURB & RAMP (LIBERTY STREET & SITE DRIVEWAY) — 34

No.	Revision	Date
1.	TOWN HIGHWAY DEPARTMENT SUBMISSION	12/15/2020
2.	ISSUED FOR BUILDING PERMIT	03/12/2021
3.	ISSUE FOR PRICING	03/16/2021
4.	D.O.B. COMMENTS	04/26/2021

Previous Editions Obsolete

JMC Planning, Engineering, Landscape Architecture & Land Surveying, PLLC
JMC Site Development Consultants, LLC
John Meyer Consulting, Inc.
120 BEDFORD ROAD · ARMONK, NY 10504
voice 914.273.5225 · fax 914.273.2102
www.jmcpllc.com

CONSTRUCTION DETAILS

500 COMMERCE STREET REDEVELOPMENT
500 COMMERCE STREET
HAWTHORNE, NY 10532

ANY ALTERATION OF PLANS, SPECIFICATIONS, PLATS AND REPORTS BEARING THE SEAL OF A LICENSED PROFESSIONAL ENGINEER OR LICENSED LAND SURVEYOR IS A VIOLATION OF SECTION 7209 OF THE NEW YORK STATE EDUCATION LAW, EXCEPT AS PROVIDED FOR BY SECTION 7209, SUBSECTION 2.

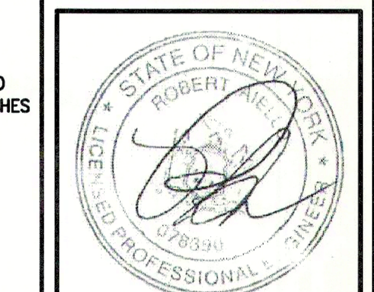

Drawn: JR	Approved: RA
Scale:	NOT TO SCALE
Date:	01/06/2020
Project No:	18158
18158-DETAILS	C-904
Drawing No:	C–904

NOT FOR CONSTRUCTION
COPYRIGHT © 2021 by JMC All Rights Reserved. No part of this document may be reproduced, stored in a retrieval system, or transmitted in any form or by means, electronic, mechanical, photocopying, recording or otherwise, without the prior written permission of JMC PLANNING, ENGINEERING, LANDSCAPE ARCHITECTURE & LAND SURVEYING, PLLC | JMC SITE DEVELOPMENT CONSULTANTS, LLC | JOHN MEYER CONSULTING, INC. (JMC).

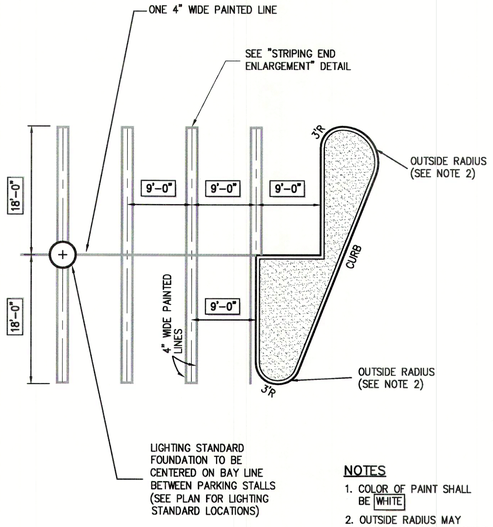

90° PARKING
(DOUBLE STRIPING – CURBED END)

NOTES

1. COLOR OF PAINT SHALL BE WHITE
2. OUTSIDE RADIUS MAY VARY DEPENDING ON SHAPE OF ISLAND. RADIUS SHALL BE AS SHOWN ON LAYOUT PLAN.

35

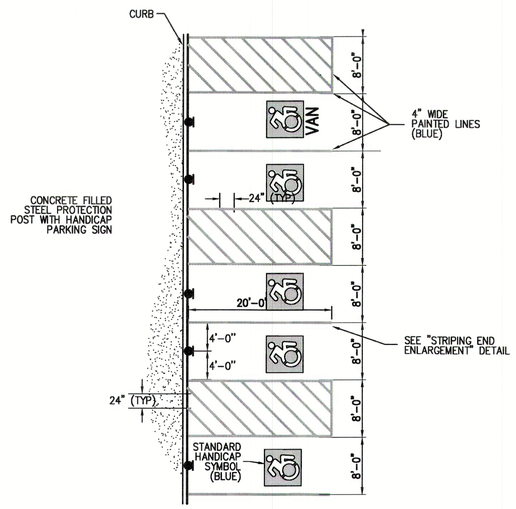

NOTE: SLOPES IN HANDICAP PARKING AREAS SHALL NOT EXCEED 2%

HANDICAP PARKING
(SINGLE STRIPING – CURBLINE ALIGNMENT – W/O SIDEWALK) (NEW YORK)

36

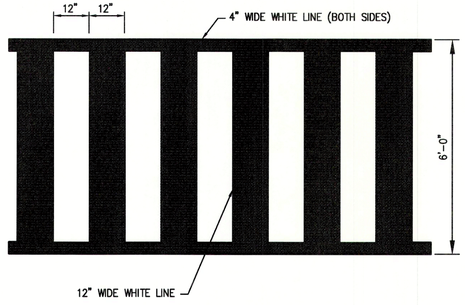

PEDESTRIAN CROSSING

37

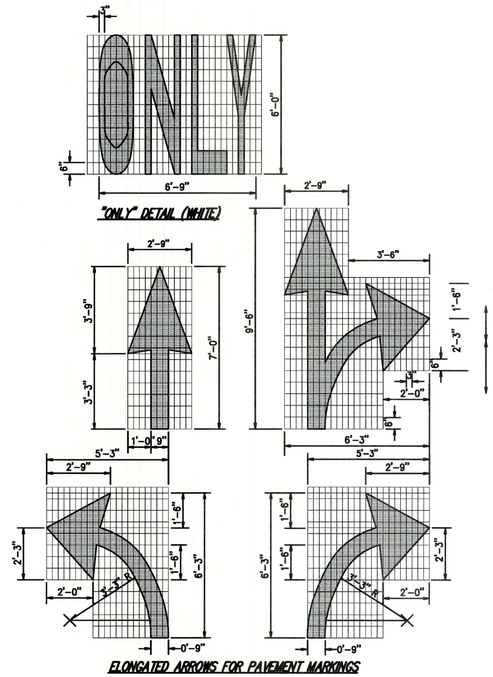

PAVEMENT TEXT & ARROWS
(ON-SITE)

38

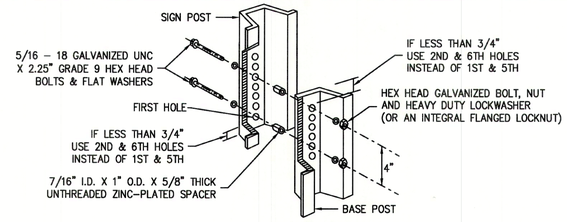

CHANNEL OVERLAP ENLARGEMENT

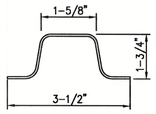

CHANNEL CROSS SECTION

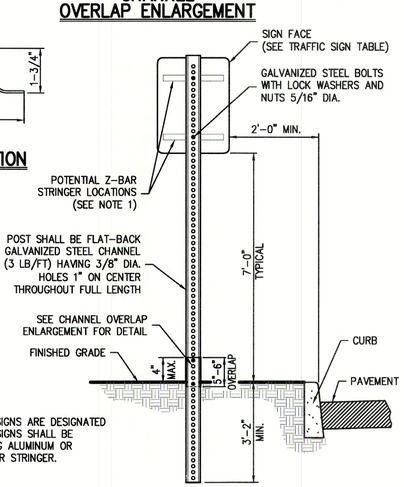

NOTE:

1. WHEN BACK TO BACK SIGNS ARE DESIGNATED TO SHARE ONE POST, SIGNS SHALL BE AFFIXED TO POST USING ALUMINUM OR STAINLESS STEEL Z–BAR STRINGER.

TRAFFIC SIGN POST
(BREAKAWAY STEEL CHANNEL)

39

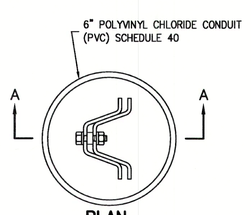

PLAN
TRAFFIC SIGN POST IN PAVED AREAS

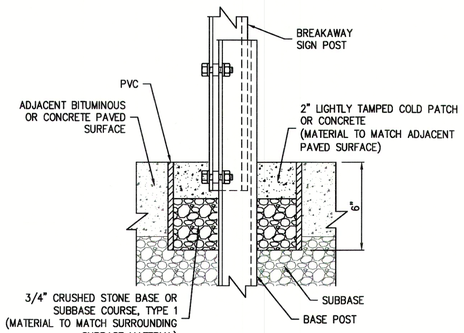

SECTION A–A
TRAFFIC SIGN POST IN PAVED AREAS

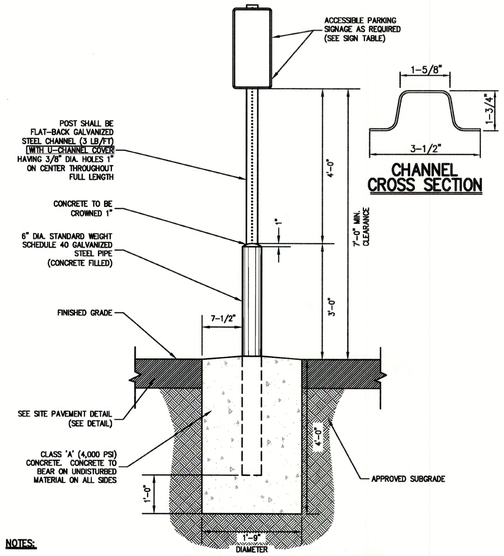

NOTES:

1. GALVANIZED STEEL CHANNEL SHALL BE EMBEDDED A MIN. OF 3 FT. INTO THE CONCRETE
2. POSTS FOR HANDICAP PARKING STALLS AND ACCESS AISLES SHALL BE PAINTED BLUE AS FOLLOWS:
   A. SOLVENT CLEAN TO REMOVE OIL, GREASE AND OTHER CONTAMINANTS.
   B. APPLY METAL PRIMER FOR GALVANIZED SURFACES.
   C. APPLY TWO (2) FINISH COATS OF APPROVED EXTERIOR PAINT FOR METAL SURFACES.
3. CONTRACTOR SHALL BE RESPONSIBLE FOR COORDINATING THE INSTALLATION OF THE PARKING SIGNS, BOLLARDS AND FOUNDATIONS WITH THE DESIGN AND INSTALLATION OF THE SITE SIDEWALKS, CURBING, PAVEMENT AND ANY OTHER SITE FEATURES SHOWN ON THE PLANS.
4. FASTEN SIGN TO POSTS WITH GALVANIZED STEEL BOLTS, LOCK WASHERS, AND NUTS (5/16" DIA.)
5. U–CHANNEL COVERS FOR POSTS SHALL BE BLUE WITH WHITE STRIPE FOR HANDICAP PARKING STALLS AND HANDICAP ACCESS AISLES.

ACCESSIBLE PARKING SIGN DETAIL

40

No.	Revision	Date
1.	TOWN HIGHWAY DEPARTMENT SUBMISSION	12/15/2020
2.	ISSUED FOR BUILDING PERMIT	03/12/2021

Previous Editions Obsolete

JMC Planning, Engineering, Landscape Architecture & Land Surveying, PLLC
JMC Site Development Consultants, LLC
John Meyer Consulting, Inc.
120 BEDFORD ROAD • ARMONK, NY 10504
voice 914.273.5225 • fax 914.273.2102
www.jmcpllc.com

JMC

CONSTRUCTION DETAILS

500 COMMERCE STREET
REDEVELOPMENT
500 COMMERCE STREET
HAWTHORNE, NY 10532

ANY ALTERATION OF PLANS, SPECIFICATIONS, PLATS AND REPORTS BEARING THE SEAL OF A LICENSED PROFESSIONAL ENGINEER OR LICENSED LAND SURVEYOR IS A VIOLATION OF SECTION 7209 OF THE NEW YORK STATE EDUCATION LAW, EXCEPT AS PROVIDED FOR BY SECTION 7209, SUBSECTION 2.

STATE OF NEW YORK · ROBERT ANTHONY · 090390 · LICENSED PROFESSIONAL ENGINEER

Drawn:	JR	Approved:	RA
Scale:	NOT TO SCALE		
Date:	01/06/2020		
Project No:	18158		
18158-DETAILS	C-905	-	
Drawing No:	C-905		

COPYRIGHT © 2020 by JMC. All Rights Reserved. No part of this document may be reproduced, stored in a retrieval system, or transmitted in any form or by means, electronic, mechanical, photocopying, recording, or otherwise, without the prior written permission of JMC PLANNING, ENGINEERING, LANDSCAPE ARCHITECTURE & LAND SURVEYING, PLLC. (JMC SITE DEVELOPMENT CONSULTING, LLC FORMERLY KNOWN AS JOHN MEYER CONSULTING, INC.). Any reproduction or distribution of these drawings without the written permission of JMC is prohibited by law.

NOT FOR CONSTRUCTION

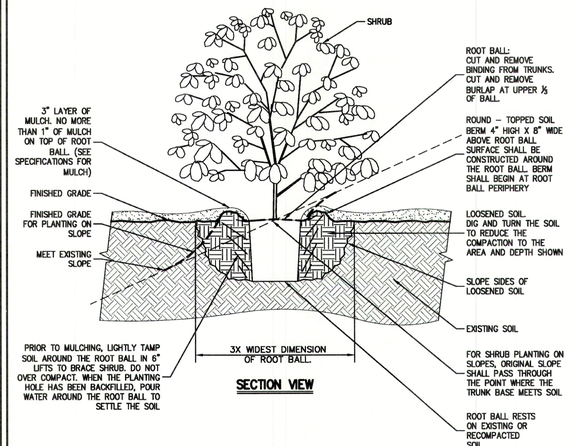

SECTION VIEW

NOTES:

1. ALL PLANTING BEDS SHALL BE FREE OF WEEDS AND GRASS PRIOR TO AND FOLLOWING INSTALLATION OF PLANTS.
2. PLANTS IN CONTAINERS MUST HAVE THE FIBROUS ROOTS PULLED APART.
3. PROPOSED PLANT MATERIAL SHALL BEAR THE SAME RELATION TO FINISHED GRADE AS IT BORE TO PREVIOUS EXISTING GRADE.

SHRUB PLANTING 42

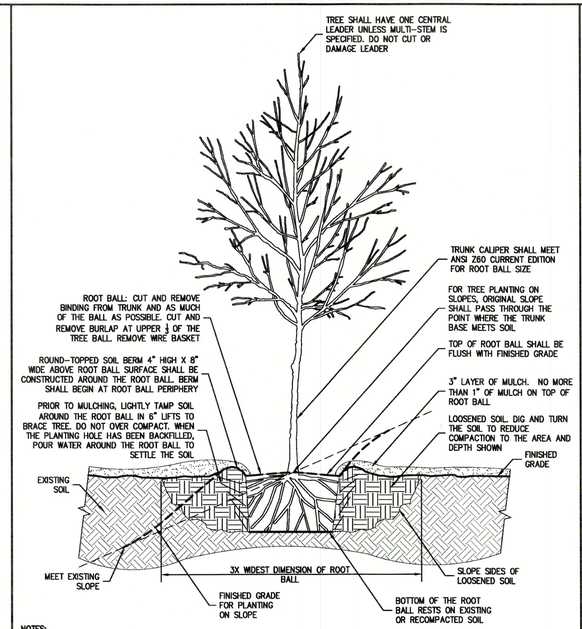

NOTES:

1. ALL PLANTING BEDS SHALL BE FREE OF WEEDS AND GRASS PRIOR TO AND FOLLOWING INSTALLATION OF PLANTS.
2. PLANTS IN CONTAINERS MUST HAVE THE FIBROUS ROOTS PULLED APART.
3. PROPOSED PLANT MATERIAL SHALL BEAR THE SAME RELATION TO FINISHED GRADE AS IT BORE TO PREVIOUS EXISTING GRADE.
4. SEE TREE STAKING DETAIL IF STAKING IS REQUIRED.

TREE PLANTING 43
(DECIDUOUS AND EVERGREEN)

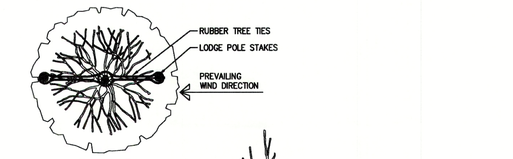

PLAN VIEW

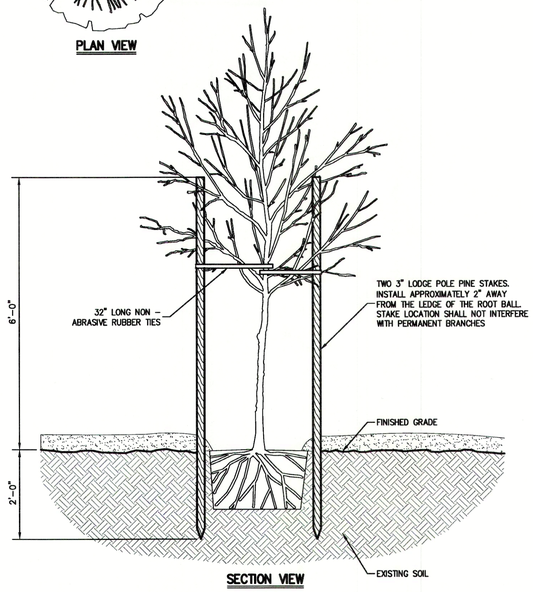

SECTION VIEW

TREE STAKING 44

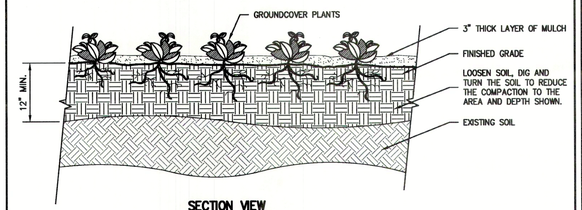

SECTION VIEW

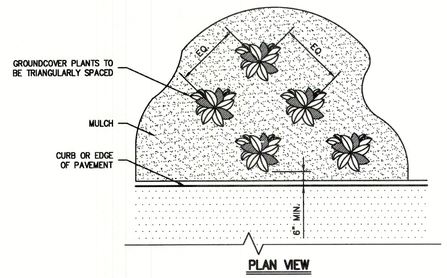

PLAN VIEW

NOTES:

1. SEE PLANTING PLAN FOR GROUNDCOVER SPECIES, SIZE, AND SPACING DIMENSION.
2. SETTLE SOIL AROUND ROOT BALL OF EACH GROUNDCOVER PLANT PRIOR TO MULCHING.
3. ALL PLANTING BEDS SHALL BE FREE OF WEEDS AND GRASS PRIOR TO AND FOLLOWING INSTALLATION OF PLANTS.
4. PLANTS IN CONTAINERS MUST HAVE THE FIBROUS ROOTS PULLED APART.
5. PROPOSED PLANT MATERIAL SHALL BEAR THE SAME RELATION TO FINISHED GRADE AS IT BORE TO PREVIOUS EXISTING GRADE.

GROUNDCOVER 45

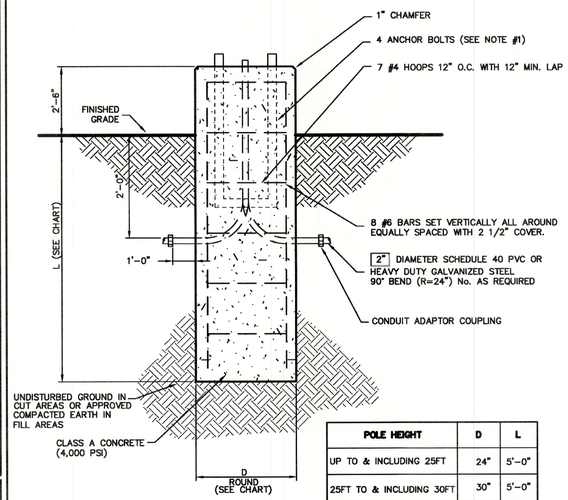

POLE HEIGHT	D	L
UP TO & INCLUDING 25FT	24"	5'–0"
25FT TO & INCLUDING 30FT	30"	5'–0"
30FT TO & INCLUDING 40FT	30"	6'–6"

NOTES:

1. IT SHALL BE THE CONTRACTOR'S RESPONSIBILITY TO CHECK AND VERIFY ALL ANCHOR BOLT DIMENSIONS (SIZE, BOLT CIRCLE, ETC.) WITH THE CONTRACTOR WHO WILL BE INSTALLING THE LIGHTING STANDARD PRIOR TO INSTALLATION OF THE FOUNDATIONS.
2. CHAMFER EXPOSED EDGES OF ALL FOUNDATIONS.
3. PROVIDE INSULATED GROUNDING BUSHING ON EXPOSED ENDS (IN BASE OF POLE) OF ALL GALVANIZED STEEL BENDS.
4. POLES AND LUMINAIRES WILL BE FURNISHED AND INSTALLED BY OTHERS.
5. REFER TO DRAWING SHEET L–200 FOR LIGHT FIXTURE SPECIFICATIONS

LIGHTING STANDARD FOUNDATION 46
(ROUND)

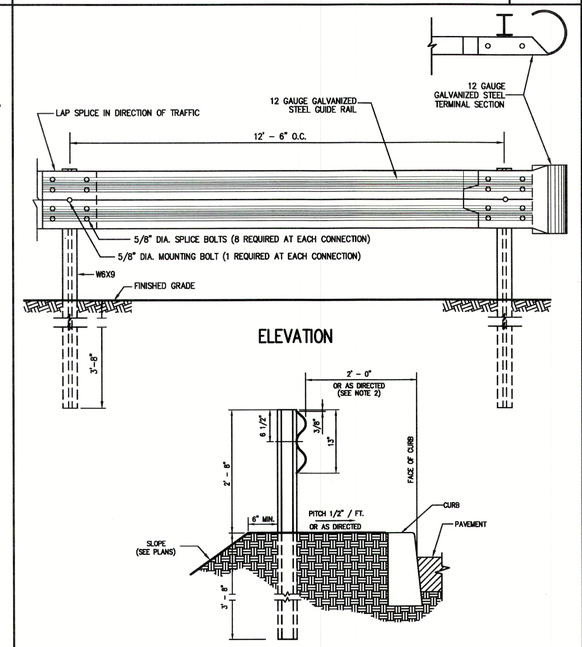

ELEVATION

SECTION

NOTE:

1. ALL NUTS & BOLTS SHALL BE GALVANIZED STEEL.
2. THE OFFSET OF THE GUIDE RAIL SHALL BE MEASURED FROM THE FACE OF CURB TO THE FACE OF THE RAIL. THE RAIL MOUNTING HEIGHT OF ALL GUIDE RAIL PLACED BEHIND CURB (REGARDLESS OF CURB HEIGHT OR SPEED) SHALL BE MEASURED FROM THE PAVEMENT WHEN THE OFFSET IS 1'–0" OR LESS AND TO THE GROUND SURFACE UNDER THE FACE OF THE RAIL WHEN THE OFFSET IS GREATER THAN 1'–0".

CORRUGATED STEEL GUIDE RAIL 47

XX

XX

No.	Revision	Date
1.	TOWN HIGHWAY DEPARTMENT SUBMISSION	12/15/2020
2.	ISSUED FOR BUILDING PERMIT	03/12/2021

JMC Planning, Engineering, Landscape Architecture & Land Surveying, PLLC
JMC Site Development Consultants, LLC
John Meyer Consulting, Inc.
120 BEDFORD ROAD • ARMONK, NY 10504
voice 914.273.5225 • fax 914.273.2102
www.jmcpllc.com

JMC

CONSTRUCTION DETAILS

500 COMMERCE STREET
REDEVELOPMENT
500 COMMERCE STREET
HAWTHORNE, NY 10532

ANY ALTERATION OF PLANS, SPECIFICATIONS, PLATS AND REPORTS BEARING THE SEAL OF A LICENSED PROFESSIONAL ENGINEER OR LICENSED LAND SURVEYOR IS A VIOLATION OF SECTION 7209 OF THE NEW YORK STATE EDUCATION LAW, EXCEPT AS PROVIDED FOR BY SECTION 7209, SUBSECTION 2.

STATE OF NEW YORK · ROBERT A. · 039990 · LICENSED PROFESSIONAL · ENGINEER

Drawn:	JR
Approved:	RA
Scale:	NOT TO SCALE
Date:	01/06/2020
Project No:	18158
18158-DETAILS	C-906 –
Drawing No:	C-906

COPYRIGHT © 2020 by JMC. All Rights Reserved. No part of this document may be reproduced, stored in a retrieval system, or transmitted in any form or by means, electronic, mechanical, photocopying, recording or otherwise, without the prior written permission of JMC PLANNING, ENGINEERING, LANDSCAPE ARCHITECTURE & LAND SURVEYING, PLLC, JMC SITE DEVELOPMENT CONSULTING, LLC, JOHN MEYER CONSULTING, INC., JMC. Any modifications or alterations to this document without the written permission of JMC will be made with unauthorized use.

NOT FOR CONSTRUCTION

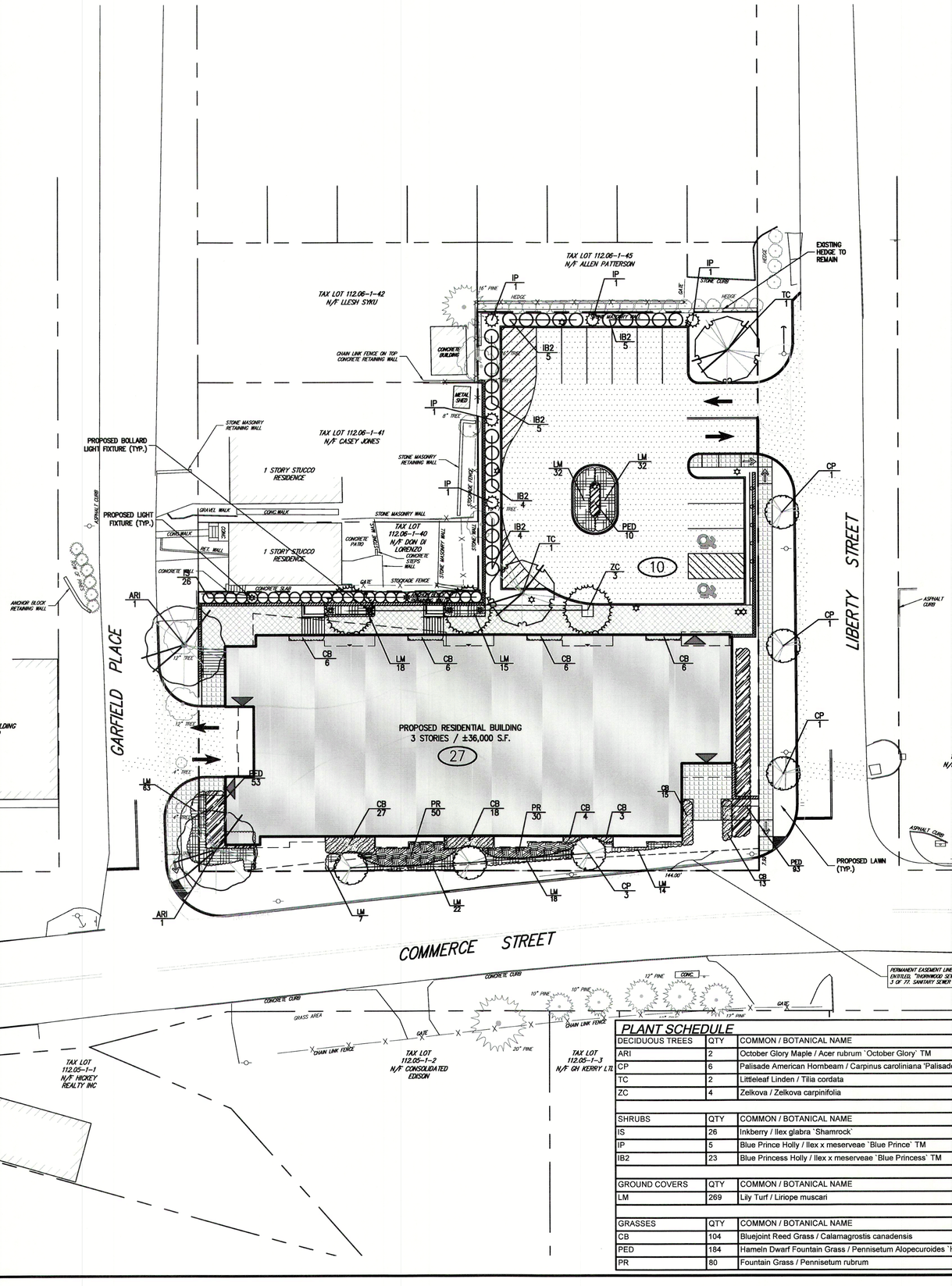

LEGEND

- EXISTING PROPERTY LINE
- ADJACENT PROPERTY LINE
- EXISTING SETBACK LINE
- EXISTING BUILDING OVERHANG
- EXISTING BUILDING LINE
- EXISTING PAVEMENT EDGE
- EXISTING CURB LINE
- EXISTING RETAINING WALL
- EXISTING GUIDE RAIL
- EXISTING FENCE
- EXISTING TREE AND DESIGNATION
- EXISTING TREE LINE
- EXISTING DIRECTIONAL ARROWS
- EXISTING PAINT
- EXISTING UTILITY POLE
- EXISTING LIGHT POLE
- EXISTING SIGN
- PROPOSED BUILDING LINE
- PROPOSED CONCRETE CURB
- PROPOSED CONCRETE SIDEWALK
- PROPOSED PAVERS
- PROPOSED PAVEMENT
- PROPOSED RETAINING WALL (DESIGN BY OTHERS)
- TRAFFIC SIGN LOCATION & DESIGNATION
- PROPOSED SHADE TREE
- PROPOSED FLOWERING TREE
- PROPOSED CONIFEROUS TREE
- PROPOSED SHRUBS
- PROPOSED SHRUB MASSING

NOTES:

1. ALL PLANT MATERIAL SHALL BE FIRST QUALITY STOCK. PLANTED MATERIAL AND METHODS OF INSTALLATION SHALL CONFORM TO THE AMERICAN NURSERY AND LANDSCAPE ASSOCIATION, AMERICAN STANDARD FOR NURSERY STOCK, LATEST EDITION.
2. ALL AREAS OF THE SITE NOT OCCUPIED BY BUILDING OR PAVEMENT AND NOT SPECIFIED AS BEING PLANTED WITH TREES, SHRUBS OR GROUND COVER SHALL BE LAWN.
3. ALL PLANTING BEDS SHALL BE MULCHED WITH 3" OF BROWN MULCH. MULCH SHALL BE CLEAN, NON-DYED, TOXIC FREE, SHREDDED HARDWOOD.
4. PLANT MATERIALS AS SPECIFIED ON THE DRAWINGS AND DELIVERED TO THE SITE SHALL BE NURSERY GROWN AND CERTIFIED TRUE TO THEIR GENUS, SPECIES AND VARIETY. SUBSTITUTIONS ARE NOT PERMITTED WITHOUT THE PROJECT LANDSCAPE ARCHITECTS WRITTEN APPROVAL.
5. ALL LANDSCAPING SHALL CONTINUE TO BE MAINTAINED IN A HEALTHY GROWING CONDITION THROUGHOUT THE DURATION OF THE PROJECT. ANY PLANTING NOT SO MAINTAINED SHALL BE REPLACED WITH NEW PLANTS AT THE BEGINNING OF THE NEXT, IMMEDIATELY FOLLOWING, GROWING SEASON.
6. ALL TREES AND SHRUBS SHALL BE PRUNED AND SHAPED AND BE SUBJECT TO THE APPROVAL OF THE PROJECT LANDSCAPE ARCHITECT AND GOVERNMENTAL AUTHORITIES HAVING JURISDICTION.
7. PLANTING STOCK SHALL BE WELL-BRANCHED AND WELL-FORMED, SOUND, VIGOROUS, HEALTHY, FREE FROM DISEASE, SUN-SCALE, WINDBURN, ABRASION, AND HARMFUL INSECTS OR INSECTS EGGS; AND SHALL HAVE HEALTHY, NORMAL UNBROKEN ROOT SYSTEMS. DECIDUOUS TREES AND SHRUBS SHALL BE SYMMETRICALLY DEVELOPED, OF UNIFORM HABIT OF GROWTH, WITH STRAIGHT TRUNKS OR STEMS, AND FREE FROM OBJECTIONABLE DISFIGUREMENTS. EVERGREEN TREES AND SHRUBS SHALL HAVE WELL-DEVELOPED SYMMETRICAL TOPS WITH TYPICAL SPREAD OF BRANCHES FOR EACH PARTICULAR SPECIES OR VARIETY. ONLY VINES AND GROUND COVER PLANTS WELL ESTABLISHED IN REMOVAL CONTAINERS, INTEGRAL CONTAINERS, OR FORMED HOMOGENEOUS SOIL SECTIONS SHALL BE USED. PLANTS SHALL BE GROWN UNDER CLIMATIC CONDITIONS SIMILAR TO THOSE IN THE LOCALITY OF THE PROJECT.
8. ALL STOCK SHALL BE BALLED AND BURLAPPED OR CONTAINER GROWN STOCK, UNLESS OTHERWISE SPECIFIED. BAREROOT STOCK OF ANY KIND IS UNACCEPTABLE UNLESS SPECIFIED.
9. ALL PLANTING BEDS, LAWNS AND LANDSCAPED AREAS SHALL RECEIVE A MINIMUM 4" THICK LAYER OF TOPSOIL, UNLESS OTHERWISE SPECIFIED.

PLANT SCHEDULE

DECIDUOUS TREES	QTY	COMMON / BOTANICAL NAME	SIZE	ROOT COND.	REMARKS
ARI	2	October Glory Maple / Acer rubrum `October Glory` TM	3" - 3 1/2" Cal.	B & B	
CP	6	Palisade American Hornbeam / Carpinus caroliniana 'Palisade'	3" - 3 1/2" Cal.	B & B	
TC	2	Littleleaf Linden / Tilia cordata	3" - 3 1/2" Cal.	B & B	
ZC	4	Zelkova / Zelkova carpinifolia	3" - 3 1/2" Cal.	B & B	
SHRUBS	QTY	COMMON / BOTANICAL NAME	SIZE	ROOT COND.	REMARKS
IS	26	Inkberry / Ilex glabra `Shamrock`	B & B	3' - 4' HT.	
IP	5	Blue Prince Holly / Ilex x meserveae `Blue Prince` TM	5 gal	Cont.	
IB2	23	Blue Princess Holly / Ilex x meserveae `Blue Princess` TM	5 gal	Cont.	
GROUND COVERS	QTY	COMMON / BOTANICAL NAME	SIZE		REMARKS
LM	269	Lily Turf / Liriope muscari	1 gal		
GRASSES	QTY	COMMON / BOTANICAL NAME	SIZE		REMARKS
CB	104	Bluejoint Reed Grass / Calamagrostis canadensis	1 gal		
PED	184	Hameln Dwarf Fountain Grass / Pennisetum Alopecuroides `Hameln`	1 gal		
PR	80	Fountain Grass / Pennisetum rubrum	1 gal		

ANY ALTERATION OF PLANS, SPECIFICATIONS, PLATS AND REPORTS BEARING THE SEAL OF A LICENSED PROFESSIONAL ENGINEER OR LICENSED LAND SURVEYOR IS A VIOLATION OF SECTION 7209 OF THE NEW YORK STATE EDUCATION LAW, EXCEPT AS PROVIDED FOR BY SECTION 7209, SUBSECTION 2.

No.	Revision	Date	By
1.	PLANNING BOARD SUBMISSION	01/16/2019	JJ
2.	PLANNING BOARD SUBMISSION	06/06/2019	JJ
3.	REVISED PER TOWN ENGINEER COMMENTS	10/01/2019	TK
4.	REVISED PER TOWN ENGINEER COMMENTS	12/13/2019	JJ
5.	TOWN HIGHWAY DEPARTMENT SUBMISSION	12/15/2020	JJ
6.	ISSUED FOR BUILDING PERMIT	03/12/2021	JJ
	Previous Editions Obsolete		

APPLICANT/OWNER:
500 COMMERCE LLC
3 WEST STEVENS AVENUE
HAWTHORNE, NY 10532

ARCHITECT:
DIMOVSKI ARCHITECTURE PLLC
59 KENSICO ROAD
THORNWOOD, NY 10594

JMC Planning, Engineering, Landscape Architecture & Land Surveying, PLLC
JMC Site Development Consultants, LLC
John Meyer Consulting, Inc.
120 BEDFORD ROAD • ARMONK, NY 10504
voice 914.273.5225 • fax 914.273.2102
www.jmcpllc.com

LANDSCAPE PLAN

500 COMMERCE STREET REDEVELOPMENT
500 COMMERCE STREET
HAWTHORNE, NY 10532

STATE OF NEW YORK · ROBERT ANDREW · 090390 · LICENSED PROFESSIONAL ENGINEER

Drawn: JJ Approved: RA
Scale: 1" = 20'
Date: 01/16/2019
Project No: 18158
18158-LAND | L-100 | LAY.scr
Drawing No: L-100

NOT FOR CONSTRUCTION

COPYRIGHT © 2021 by JMC. All Rights Reserved. No part of this document may be reproduced, stored in a retrieval system, or transmitted in any form or by means, electronic, mechanical, photocopying, recording or otherwise, without the prior written permission of JMC PLANNING, ENGINEERING, LANDSCAPE ARCHITECTURE & LAND SURVEYING, PLLC. (JMC SITE DEVELOPMENT CONSULTANTS, LLC) (JOHN MEYER CONSULTING, INC.) (JMC). Any modification or alteration to this document is void, the written permission of JMC is required. Use of unauthorized

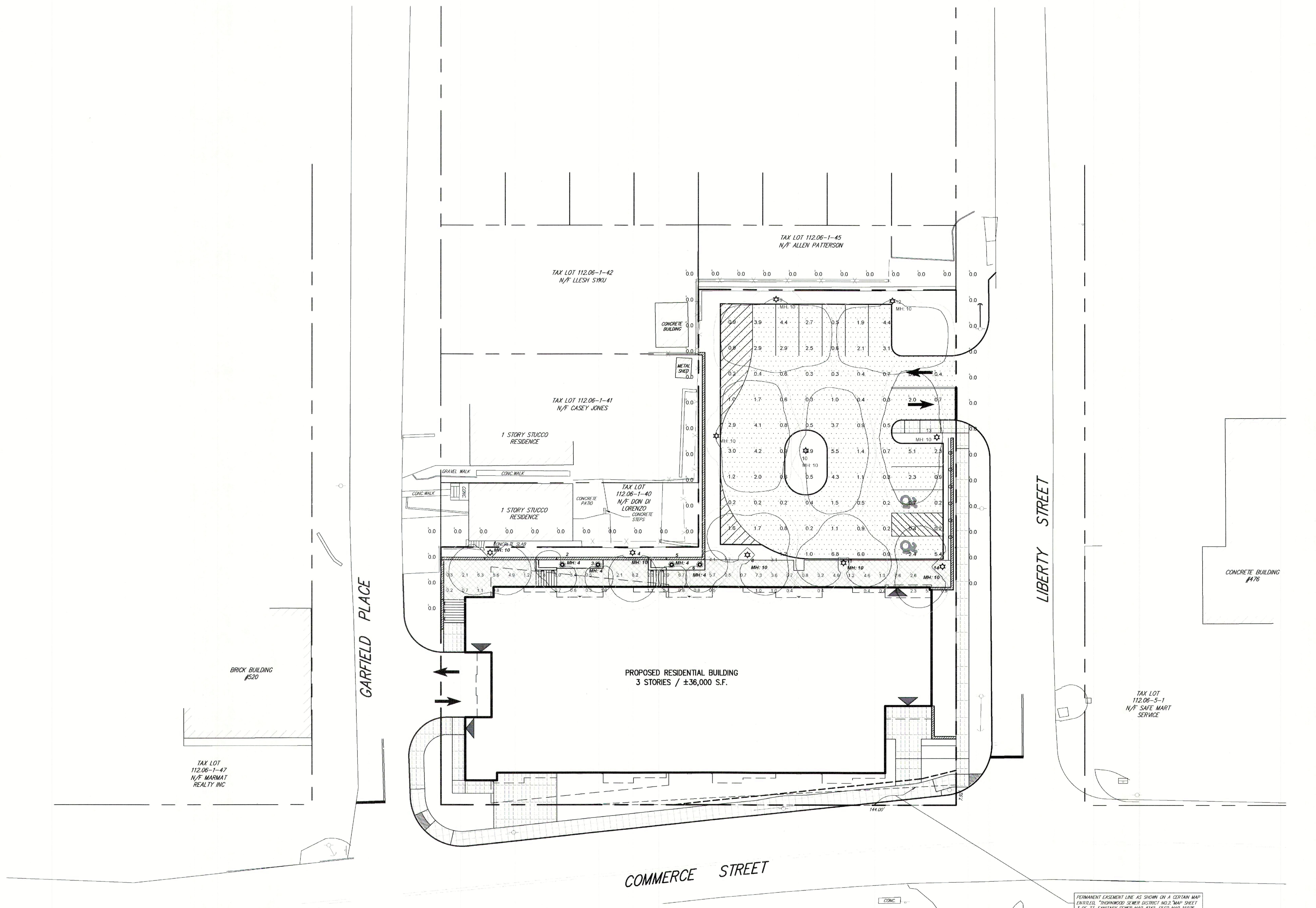

LEGEND

- EXISTING UTILITY POLE
- EXISTING LIGHT POLE
- PROPOSED LIGHTING STANDARD (DESIGN BY OTHERS)
- PROPOSED BOLLARD LIGHTING STANDARD
- 0.1 PROPOSED ILLUMINANCE IN FOOT-CANDLES
- PROPOSED STANDARD LIGHTING AND ISOLUX PATTERNS
- EXISTING FEATURE TO BE REMOVED

NOTES:

1. THE CONTRACTOR SHALL VERIFY THE LOCATION OF ALL EXISTING UTILITIES TO BE DEMOLISHED AND ALL EXISTING UTILITIES TO REMAIN AND BE PROTECTED. IF DISCREPANCIES ARE FOUND, THE CONTRACTOR SHALL IMMEDIATELY NOTIFY THE OWNER, THE GENERAL CONTRACTOR AND THE SITE ENGINEER.
2. THE LIGHTING PATTERNS DEPICTED ON THIS PLAN REPRESENT ILLUMINATION LEVELS CALCULATED UNDER CONTROLLED CONDITIONS UTILIZING CURRENT INDUSTRY STANDARD LAMP RATINGS IN ACCORDANCE WITH ILLUMINATING ENGINEERING SOCIETY (IES) APPROVED METHODS. ACTUAL PERFORMANCE OF ANY MANUFACTURER'S LUMINAIRE MAY VARY DUE TO VARIATION IN ELECTRICAL VOLTAGE, TOLERANCE IN LAMPS AND OTHER VARIABLE FIELD CONDITIONS.
3. ELECTRIC, TELE/COMM, SECURITY AND SITE LIGHTING LINES SHALL BE INSTALLED IN ACCORDANCE WITH THE REQUIREMENTS OF THE UTILITY COMPANY HAVING JURISDICTION.
4. ALL CABLES AND WIRING SHALL BE INSTALLED UNDERGROUND IN CONDUIT. CONDUIT SHALL BE SCHEDULE 40 PVC CONDUIT INSTALLED WITH TWO (2) FEET OF COVER. MINIMUM SIZE OF CONDUIT SHALL BE TWO (2) INCH DIAMETER.
5. ANY AND ALL DAMAGE TO THE EXISTING IRRIGATION SYSTEM DURING CONSTRUCTION SHALL BE BROUGHT TO THE IMMDEIATE ATTENTION OF THE OWNER AND SHALL BE REPAIRED IN-KIND AS DIRECTED BY THE OWNER'S FIELD REPRESENTATIVE.
6. LIGHTING CALCULATIONS SHOWN HEREON WERE PREPARED BY SELUX, DATED 12/13/2019.
7. REFER TO THE TABLES BELOW BASED FOR CORRESPONDING LABELS ON PLAN FOR FIXTURE SPECIFICATIONS. UNDER LUMINAIRE LOCATION SUMMARY COLUMN Z EQUATES TO FIXTURE MOUNT HEIGHT.

Luminaire Location Summary

LumNo	Label	Z
1	ICL-X-2Q90-XX-XX-30-XX-UNV	10
2	IBL-X-2Q90-30-XX-UNV	4
3	IBL-X-1Q-30-XX-UNV	4
4	ICL-X-1Q-XX-XX-30-XX-UNV	10
5	IBL-X-1Q-30-XX-UNV	4
6	IBL-X-2Q90-30-XX-UNV	4
7	U5-R4-S1-5G350-30-UNV-HS	10
8	ICL-X-3Q-XX-XX-30-XX-UNV	10
9	U5-R4-S1-5G350-30-UNV-HS	10
10	U5-R3-S1-5G350-30-UNV-HS	10
11	ICL-X-3Q-XX-XX-30-XX-UNV	10
12	U5-R4-S1-5G350-30-UNV-HS	10
13	U5-R2-S1-5G350-30-UNV-HS	10
14	ICL-X-2Q90-XX-XX-30-XX-UNV	10

Calculation Summary

Label	CalcType	Units	Max	Min	Avg	Avg/Min	Max/Min
1_Parking and Roadway Area	Illuminance	Fc	6.8	0.2	1.60	8.00	34.00
2_Walkway Areas	Illuminance	Fc	8.2	0.2	2.23	11.15	41.00
3_Perimeter (fade-to-zero) Grid	Illuminance	Fc	0.0	0.0	0.00	N.A.	N.A.

Luminaire Schedule

Symbol	Qty	Label	Arrangement	LLF	Description
	2	IBL-X-1Q-30-XX-UNV	SINGLE	0.800	Inula Bollard LED, 1Q (7.6W), 3000K
	2	IBL-X-2Q90-30-XX-UNV	SINGLE	0.800	Inula Bollard LED, 2Q90 (14W), 3000K
	1	ICL-X-1Q-XX-XX-30-XX-UNV	SINGLE	0.800	Inula Column LED, 1Q (15.2W), 3000K
	2	ICL-X-2Q90-XX-XX-30-XX-UNV	SINGLE	0.800	Inula Column LED, 2Q90 (28.5W), 3000K
	2	ICL-X-3Q-XX-XX-30-XX-UNV	SINGLE	0.800	Inula Column LED, 3Q (42W), 3000K
	1	U5-R2-S1-5G350-30-UNV-HS	SINGLE	0.800	Ouray 500 LED, Type II, S1 Arm, 5G350 (44W), 3000K, House Shield
	1	U5-R3-S1-5G350-30-UNV-HS	SINGLE	0.800	Ouray 500 LED, Type III, S1 Arm, 5G350 (44W), 3000K, House Shield
	3	U5-R4-S1-5G350-30-UNV-HS	SINGLE	0.800	Ouray 500 LED, Type IV, S1 Arm, 5G350 (44W), 3000K, House Shield

ANY ALTERATION OF PLANS, SPECIFICATIONS, PLATS AND REPORTS BEARING THE SEAL OF A LICENSED PROFESSIONAL ENGINEER OR LICENSED LAND SURVEYOR IS A VIOLATION OF SECTION 7209 OF THE NEW YORK STATE EDUCATION LAW, EXCEPT AS PROVIDED FOR BY SECTION 7209, SUBSECTION 2.

STATE OF NEW YORK · ROBERT AIELLO · 078390 · LICENSED PROFESSIONAL ENGINEER

No.	Revision	Date	By
1.	PLANNING BOARD SUBMISSION	06/06/2019	JJ
2.	REVISED PER TOWN ENGINEER COMMENTS	12/13/2019	JJ
3.	TOWN HIGHWAY DEPARTMENT SUBMISSION	12/15/2020	JJ
4.	ISSUED FOR BUILDING PERMIT	03/12/2021	JJ

Previous Editions Obsolete

APPLICANT/OWNER:
500 COMMERCE LLC
3 WEST STEVENS AVENUE
HAWTHORNE, NY 10532

ARCHITECT:
DIMOVSKI ARCHITECTURE PLLC
59 KENSICO ROAD
THORNWOOD, NY 10594

JMC Planning, Engineering, Landscape Architecture & Land Surveying, PLLC
JMC Site Development Consultants, LLC
John Meyer Consulting, Inc.
120 BEDFORD ROAD • ARMONK, NY 10504
voice 914.273.5225 • fax 914.273.2102
www.jmcpllc.com

JMC

LIGHTING PLAN

500 COMMERCE STREET REDEVELOPMENT
500 COMMERCE STREET
HAWTHORNE, NY 10532

Drawn: JJ Approved: RA
Scale: 1" = 20'
Date: 06/06/2019
Project No: 18158
18158-LAND | L-200 | LAY.scr
Drawing No: L-200

NOT FOR CONSTRUCTION

COPYRIGHT © 2021 by JMC All Rights Reserved. No part of this document may be reproduced, stored ...

HIGHWAY IMPROVEMENT PLANS

500 COMMERCE STREET REDEVELOPMENT

TAX MAP SECTION 112.06 | BLOCK 1 | LOT 46
WESTCHESTER COUNTY
500 COMMERCE STREET
HAWTHORNE, NY 10532

Applicant / Owner:
500 COMMERCE LLC
3 WEST STEVENS AVENUE
HAWTHORNE, NY 10532
(914) 741-4435

Surveyor:
TC MERRITS LAND SURVEYORS
394 BEDFORD ROAD
PLEASANTVILLE, NY 10570
(914) 769-8003

Architect:
DIMOVSKI ARCHITECTURE PLLC
59 KENSICO ROAD
THORNWOOD, NY 10594
(914) 747-350

Civil & Traffic Engineer, and Landscape Architect:
JMC
120 BEDFORD ROAD
ARMONK, NY 10504
(914) 273-5225

JMC Drawing List:

HP-1	COVER SHEET
HP-2	LAYOUT PLAN PHASE 1
HP-2A	LAYOUT PLAN PHASE 2
HP-3	SIGNING, STRIPING, & LANDSCAPING PLAN
HP-4	GRADING & UTILITIES PLAN
HP-5	EROSION AND SEDIMENT CONTROL PLAN
HP-6	WORK ZONE TRAFFIC CONTROL PLAN
HP-7	CONSTRUCTION DETAILS
HP-8	CONSTRUCTION DETAILS
HP-9	CONSTRUCTION DETAILS
HP-10	CONSTRUCTION DETAILS

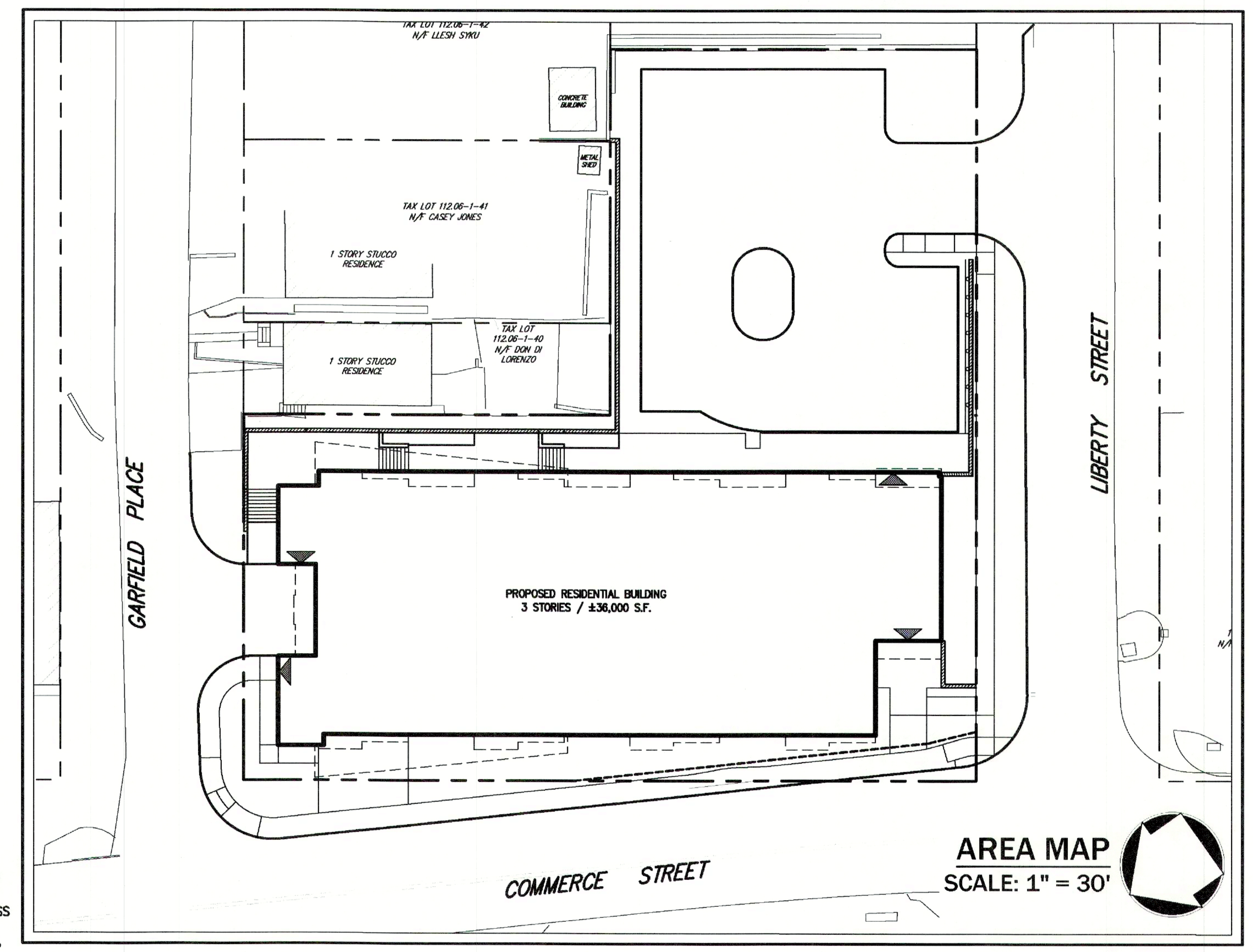

AREA MAP
SCALE: 1" = 30'

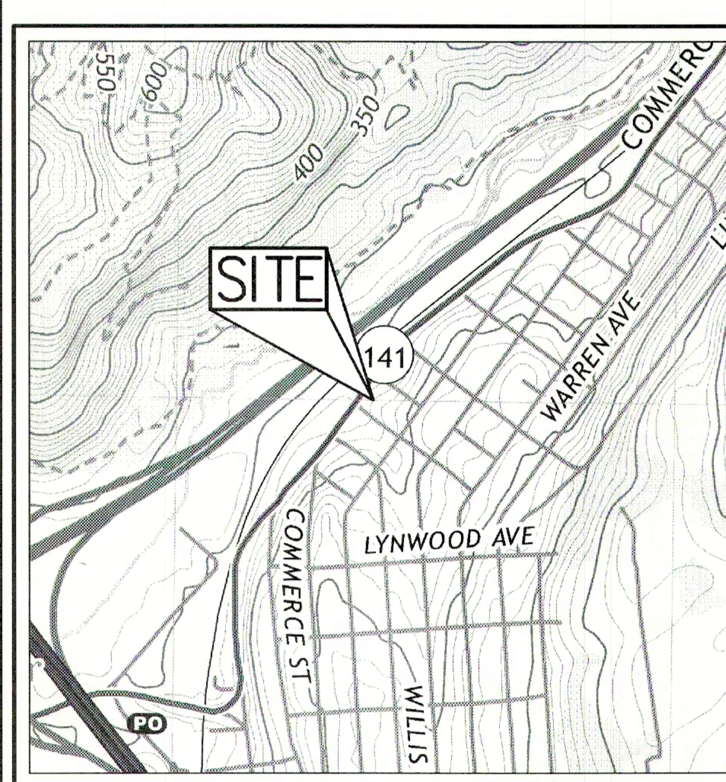

ZONING / VICINITY MAP
SCALE: 1" = 1,000'
SOURCE: USGS / 2019

GENERAL NOTES:

G1. ALL WORK SHALL BE IN ACCORDANCE WITH THE REQUIREMENTS AND CONDITIONS IMPOSED BY THE NEW YORK STATE DEPARTMENT OF TRANSPORTATION (NYSDOT), THE WESTCHESTER COUNTY DEPARTMENT OF PUBLIC WORKS & TRANSPORTATION (WCDPWT), AND TOWN OF MOUNT PLEASANT AS APPLICABLE. UNLESS OTHERWISE NOTED, ALL ITEM NUMBERS FOR SPECIFIC WORK TASKS RELATE TO THE NYSDOT STANDARD SPECIFICATIONS. A PRE CONSTRUCTION MEETING SHALL TAKE PLACE WITH THE NYSDOT, THE PERMITTEE, PERMITTEE'S CONSULTANTS, AND CITY ENGINEER IF APPLICABLE PRIOR TO ANY CONSTRUCTION.

G2. FOR WORK ON COMMERCE STREET (FROM ITS INTERSECTION WITH LIBERTY STREET AND NORTH), THE NYSDOT STANDARD SHEETS, SPECIFICATIONS AND DETAILS SHALL GOVERN.

G3. FOR WORK ON COMMERCE STREET (SOUTH OF ITS INTERSECTION WITH LIBERTY STREET), THE WCDPW STANDS, SPECIFICATION AND DETAILS SHALL GOVERN.

G4. FOR WORK ON LIBERTY STREET AND GARFIELD PLACE, THE TOWN OF MOUNT PLEASANT STANDARDS, SPECIFICATIONS AND DETAILS SHALL GOVERN.

G5. ALL NEW LANE LINES & PAVEMENT MARKINGS SHALL BE RETROREFLECTIVE EPOXY WITH WET NIGHT VISIBILITY SPHERES. ALL SIGNS AND PAVEMENT MARKINGS SHALL CONFORM TO THE NYSDOT STANDARD SHEETS, SPECIFICATIONS AND DETAILS AND THE FEDERAL HIGHWAY ADMINISTRATION (FHWA) MANUAL OF UNIFORM TRAFFIC CONTROL DEVICES (MUTCD) AND NYSDOT SUPPLEMENT.

G6. ALL EXISTING CONFLICTING PAVEMENT LINES OR SYMBOLS WHICH ARE TO BE REMOVED SHALL BE REMOVED BY APPROVED METHODS WHERE AND AS DIRECTED BY THE ENGINEER. PAINTING OVER EXISTING MARKINGS WILL NOT BE ACCEPTED. REFER TO SECTION 635 OF THE NYSDOT STANDARD DETAILS AND SPECIFICATIONS.

G7. WORK ZONE TRAFFIC CONTROL SHALL BE PROVIDED IN ACCORDANCE WITH FHWA MUTCD AND THE NYSDOT STANDARD DETAILS AND SPECIFICATIONS, LATEST EDITION.

G8. LIMIT OF CONTRACT TO EXTEND WITHIN THE SITE, AS SHOWN. CONTRACTOR SHALL COORDINATE ON-SITE AND OFF-SITE CONSTRUCTION.

G9. THE LIMITS OF CLEARING AND GRUBBING (ITEM 201.06) SHALL NOT EXTEND BEYOND THE LIMIT OF GRADING UNLESS APPROVED BY THE APPROPRIATE AUTHORITY HAVING JURISDICTION (ENGINEER). ANY DEAD BRUSH OR TREES SHALL BE REMOVED AS DIRECTED BY THE ENGINEER. NO CLEARING AND GRUBBING SHALL BE DONE BY THE CONTRACTOR UNTIL THE LIMITS OF CLEARING AND GRUBBING HAVE BEEN APPROVED. ANY AREAS DISTURBED WITHOUT THE ENGINEER'S APPROVAL SHALL BE RESTORED AS DIRECTED BY THE ENGINEER AT THE CONTRACTOR'S EXPENSE. MATERIAL FROM CLEARING AND GRUBBING SHALL BE PROPERLY DISPOSED OF OFF-SITE BY THE CONTRACTOR.

G10. STEEL PLATES SHALL BE RECESSED AND PINNED IF REQUIRED FROM OCTOBER 15TH TO MARCH 30TH. RAMPING WITH "RAISE PLOW" SIGNAGE WILL NOT BE ALLOWED.

G11. ALL DISTURBED GROUND SURFACES WHICH ARE NOT TO BE PAVED SHALL BE PROPERLY RESTORED TO THE GRADES SHOWN AND/OR AS DIRECTED BY THE ENGINEER. THE CONTRACTOR SHALL PLACE FOUR (4) INCHES OF TOPSOIL (ITEM 610.1402), AND ESTABLISH TURF (ITEM 610.1601) ON ALL DISTURBED GROUND SURFACES. THE CONTRACTOR SHALL WATER (ITEM 610.19), MOW (ITEM 610.21), AND WEED (ITEM 610.13) THE TURF ESTABLISHMENT AREAS FOR THE DURATION OF THE PERMIT.

G12. PRIOR TO CONSTRUCTION, THE CONTRACTOR SHALL CALL "DIG SAFELY" (1-800-962-7962) TO HAVE UNDERGROUND UTILITIES LOCATED. EXPLORATORY EXCAVATIONS SHALL COMPLY WITH CODE 53 (753) REQUIREMENTS. NO WORK SHALL COMMENCE UNTIL ALL THE OPERATORS HAVE NOTIFIED THE CONTRACTOR THAT THEIR UTILITIES HAVE BEEN LOCATED. THE CONTRACTOR SHALL BE RESPONSIBLE FOR THE PRESERVATION OF ALL PUBLIC AND PRIVATE UNDERGROUND AND SURFACE UTILITIES AND STRUCTURES AT OR ADJACENT TO THE SITE OF CONSTRUCTION, INSOFAR AS THEY MAY BE ENDANGERED BY HIS OPERATIONS. THIS SHALL HOLD TRUE WHETHER OR NOT THEY ARE SHOWN ON THE CONTRACT DRAWINGS. IF THEY ARE SHOWN ON THE DRAWINGS, THEIR LOCATIONS ARE NOT GUARANTEED EVEN THOUGH THE INFORMATION WAS OBTAINED FROM THE BEST AVAILABLE SOURCES, AND IN ANY EVENT, OTHER UTILITIES ON THESE PLANS MAY BE ENCOUNTERED IN THE FIELD. THE CONTRACTOR SHALL, AT HIS OWN EXPENSE, IMMEDIATELY REPAIR OR REPLACE ANY STRUCTURES OR UTILITIES THAT HE DAMAGES, AND SHALL CONSTANTLY PROCEED WITH CAUTION TO PREVENT UNDUE INTERRUPTION OF UTILITY SERVICE.

G13. UNDER INDUSTRIAL CODE 53, CONTRACTOR SHALL NOTIFY ALL OPERATORS OF UTILITIES LOCATED IN THE AREA WHERE THE WORK IS TO BE PERFORMED PRIOR TO THE START OF THIS WORK SO THAT ALL THE VARIOUS UNDERGROUND UTILITY OPERATORS WILL BE ABLE TO LOCATE AND MARK THE LOCATIONS OF THEIR OWN UTILITIES. NO WORK SHALL COMMENCE UNTIL ALL THE OPERATORS HAVE NOTIFIED THE CONTRACTOR THAT THEIR UTILITIES HAVE BEEN LOCATED.

G14. CONTRACTOR SHALL HAND DIG TEST PITS TO VERIFY THE LOCATION OF ALL EXISTING UNDERGROUND UTILITIES PRIOR TO THE START OF CONSTRUCTION. CONTRACTOR SHALL VERIFY EXISTING UTILITIES DEPTHS AND ADVISE OF ANY CONFLICTS WITH PROPOSED UTILITIES. IF CONFLICTS ARE PRESENT, THE OWNER'S FIELD REPRESENTATIVE, JMC PLANNING, ENGINEERING, LANDSCAPE ARCHITECTURE & LAND SURVEYING, PLLC (JMC) AND THE APPLICABLE MUNICIPALITY OR AGENCY SHALL BE NOTIFIED IN WRITING. THE EXISTING/PROPOSED UTILITIES RELOCATION SHALL BE DESIGNED BY JMC IN ACCORDANCE WITH THE APPLICABLE REQUIREMENTS AND THE UTILITY COMPANY HAVING JURISDICTION.

G15. CONTRACTOR IS RESPONSIBLE FOR OBTAINING ANY AND ALL LOCAL PERMITS REQUIRED.

G16. CONTRACTOR SHALL PROVIDE ALL TEMPORARY SUPPORTS, BRACING OR OTHER DEVICES THAT MAY BE REQUIRED, OR THAT MAY BE DIRECTED BY THE ENGINEER, TO PROTECT THE SAFETY OF ADJACENT STRUCTURES, ROADWAYS OR UTILITIES. THE COST OF THIS WORK SHALL BE INCLUDED IN THE SUM BID PRICE FOR THE VARIOUS ITEMS IN THE CONTRACT AND NO SEPARATE PAYMENT SHALL BE MADE.

G17. CONTRACTOR SHALL PROVIDE SAFE AND ADEQUATE ACCESS INTO OR THROUGH THE WORK SITE BY EMERGENCY VEHICLES AT ALL TIMES.

G18. ALL EXISTING PAVEMENT AND SHOULDER SURFACES THAT ARE TO BE RESURFACED SHALL BE CLEANED IN ACCORDANCE WITH SECTION 633 (CONDITIONING OF EXISTING PAVEMENT) OF THE NYSDOT STANDARD SPECIFICATIONS.

G19. TEMPORARY SOIL EROSION AND WATER POLLUTION CONTROL MEASURES, ACCORDING TO NYSDOT STANDARD SPEC SECTION 209, SHALL BE USED DURING THE LIFE OF THE CONTRACT.

G20. WHEN CONSTRUCTION ACTIVITY IS EXPECTED TO BE AT OR WITHIN 3 FEET OF THE EXISTING RIGHT-OF-WAY LIMITS, THE CONTRACTOR SHALL HAVE THE EXISTING RIGHT-OF-WAY MARKED IN THE FIELD BY A LICENSED SURVEYOR.

G21. PRIOR TO COMMENCEMENT OF ANY WORK, THE CONTRACTOR SHALL SUBMIT A PROPOSED CONSTRUCTION SEQUENCE TO THE ENGINEER FOR APPROVAL BY THE APPROPRIATE APPROVAL AUTHORITIES.

G21. ALL WORK SHALL BE DONE IN STRICT COMPLIANCE WITH ALL APPLICABLE NATIONAL, STATE, AND LOCAL CODES, STANDARDS, ORDINANCES, RULES, AND REGULATIONS. ALL CONSTRUCTION WORK SHALL BE PERFORMED IN ACCORDANCE WITH ALL SAFETY CODES. APPLICABLE SAFETY CODES MEAN THE LATEST EDITION INCLUDING ANY AND ALL AMENDMENTS, REVISIONS, AND ADDITIONS THERETO, TO THE FEDERAL DEPARTMENT OF LABOR, OCCUPATIONAL SAFETY AND HEALTH ADMINISTRATION'S OCCUPATIONAL SAFETY AND HEALTH STANDARDS (OSHA); AND APPLICABLE SAFETY, HEALTH REGULATIONS AND BUILDING CODES FOR CONSTRUCTION IN THE STATE OF NEW YORK. THE CONTRACTOR SHALL BE RESPONSIBLE FOR GUARDING AND PROTECTING ALL OPEN EXCAVATIONS IN ACCORDANCE WITH THE PROVISION OF SECTION 107-05 (SAFETY AND HEALTH REQUIREMENTS) OF THE NYSDOT STANDARD SPECIFICATIONS. IF THE CONTRACTOR PERFORMS ANY HAZARDOUS CONSTRUCTION PRACTICES, ALL OPERATIONS IN THE AFFECTED AREA SHALL BE DISCONTINUED AND IMMEDIATE ACTION SHALL BE TAKEN TO CORRECT THE SITUATION TO THE SATISFACTION OF THE APPROVAL AUTHORITY HAVING JURISDICTION.

G22. POSITIVE DRAINAGE SHALL BE PROVIDED TO ALL DRAINAGE STRUCTURES. ALL PRE-EXISTING, NEWLY INSTALLED BASINS AND PIPES SHALL BE CLEANED OUT OF ALL DEBRIS, AS REQUIRED, TO ENSURE NON-RESTRICTED FLOW PRIOR TO COMPLETION OF WORK.

G23. CONTRACTOR SHALL NOTIFY NYSDOT, WCDPWT, AND THE TOWN OF MOUNT PLEASANT, AS APPLICABLE, 72 HOURS PRIOR TO ANY STREET OR LANE CLOSURES OR ANY WORK AFFECTING TRAFFIC SIGNALS.

G24. CONTRACTOR SHALL MAINTAIN ACCESS TO ALL COMMERCIAL AND RESIDENTIAL PROPERTIES AT ALL TIMES TO THE SATISFACTION OF THE ENGINEER. RAMPING CONSTRUCTION TO PROVIDE ACCESS MAY BE CONSTRUCTED WITH SUBBASE MATERIAL EXCEPT THAT TEMPORARY ASPHALT CONCRETE SHALL BE PLACED AS DIRECTED BY THE ENGINEER. THE CONTRACTOR SHALL BE RESPONSIBLE FOR PROVIDING SAFE PEDESTRIAN ACCESS AT ALL TIMES.

G25. CONTRACTOR SHALL MAINTAIN THE INTEGRITY OF EXISTING PAVEMENT TO REMAIN.

G26. CONTRACTOR TO RESTORE PAVEMENT SURFACE AND PAVEMENT MARKINGS IN KIND AS NECCESSARY FOR AREAS OF PAVEMENT REPLACEMENT.

G27. CONTRACTOR SHALL NOTIFY ALL RESIDENTS AND BUSINESSES LOCATED IN THE WORK ZONE IN WRITING AT LEAST 72 HOURS PRIOR TO THE START OF CONSTRUCTION ACTIVITIES. SUCH NOTICES WILL BE FURNISHED BY THE CONTRACTOR AND APPROVED BY THE NYSDOT AND THE TOWN OF MOUNT PLEASANT, AS APPLICABLE.

G28. CONTRACTOR SHALL BE RESPONSIBLE FOR MAINTENANCE OF SURFACE DRAINAGE DURING THE COURSE OF WORK.

G29. WHEN BACKFILLING AROUND PROPOSED OR EXISTING STRUCTURES, COMPACTION EFFORTS SHALL CONFORM TO SECTION 203-3.13 TO 203-3.15 OF THE NYSDOT STANDARD SPECIFICATIONS.

G30. SUBMITTALS, CATALOG CUTS, SAMPLES, AND SHOP DRAWINGS MUST BE RECEIVED, REVIEWED AND APPROVED BY THE NYSDOT, WCDPWT, AND THE TOWN OF MOUNT PLEASANT, AS APPLICABLE, PRIOR TO ORDERING OR FABRICATING OF MATERIAL AND PRIOR TO INSTALLATION OF MATERIAL. FAILURE TO DO SO MAY BE CAUSE FOR TIME DELAYS IN INSTALLATION OF THE CONTRACTOR. THE CONTRACTOR WILL NOT BE ENTITLED TO COMPENSATION FOR SAID TIME DELAYS, REMOVALS, OR REPLACEMENTS.

G31. DURING CONSTRUCTION, NO WET OR FRESH CONCRETE OR LEACHATE SHALL BE ALLOWED TO ESCAPE INTO THE WATERS OF NEW YORK STATE, NOR SHALL WASHINGS FROM READY-MIX TRUCKS, MIXERS OR OTHER DEVICES BE ALLOWED TO ENTER ANY STORMWATER COLLECTION SYSTEM.

G32. AS-BUILT DRAWINGS SHALL BE PROVIDED BY THE CONTRACTOR.

G33. COPIES OF PLANS AND ALL REQUIRED PERMITS SHALL BE KEPT ON THE WORK SITE AT ALL TIMES.

G34. ALL WORK ZONE TRAFFIC CONTROL SIGNAGE AND CONSTRUCTION SIGNAGE MUST BE CLEAN AND REFLECTIVE.

G35. CONSULTANT INSPECTOR CONTACT INFORMATION:
JMC PLANNING ENGINEERING LANDSCAPE ARCHITECTURE & LAND SURVEYING, PLLC
120 BEDFORD ROAD
ARMONK, NY 10504
(914) 273-5225 PHONE
(914) 273-2102 FAX
CONTACT NAME: BRUCE BOHLANDER

WINTER WORK: STANDARD CONDITIONS AND OBLIGATION FOR HIGHWAY WORK PERMITS:

WINTER TIME WORK OPERATIONS REQUIRE PRIOR PERMISSION FROM NYSDOT PERMIT FIELD ENGINEER (AKA INSPECTOR) AND/OR RESIDENT ENGINEER.

SNOW PLOWING REQUIREMENTS:

DUE TO POSSIBLE SNOW FALL AND HENCE SNOW PLOWING OPERATIONS, ANY STEEL PLATES USED TO COVER AN EXCAVATION SHALL BE RECESSED INTO THE PAVEMENT AND PINNED.

WINTER TIME EARTHWORK REQUIREMENTS:

ALL PERMIT WORK UNDER CONSTRUCTION BETWEEN THE DATES OF NOVEMBER 1 THROUGH MAY 1 SHALL CONFORM TO THE FOLLOWING REQUIREMENTS:

1. GRANULAR OR OTHER FROST SUSCEPTIBLE MATERIAL SHALL NOT BE PLACED WHEN THE TEMPERATURE IS BELOW 32 DEGREES FAHRENHEIT.
2. FROZEN MATERIAL SHALL NOT BE INCORPORATED INTO EMBANKMENTS OR BACKFILLS.
3. MATERIAL SHALL NOT BE PLACED ON FROZEN GROUND.
4. THE MATERIAL SHALL BE COMPACTED IN ACCORDANCE WITH HIGHWAY DESIGN MANUAL CHAPTER 13 APPENDIX 13C, "REQUIREMENTS FOR THE DESIGN AND CONSTRUCTION OF UNDERGROUND UTILITY INSTALLATIONS WITHIN THE STATE HIGHWAY RIGHT-OF-WAY" (AKA BLUE BOOK), LATEST REVISION, AND/OR EI04-015 (ENGINEERING INSTRUCTION).
5. ANY SPECIAL CONDITIONS AND RESTRICTIONS AS MAY BE IMPOSED BY THE RESIDENT ENGINEER OR THE REGIONAL GEOTECHNICAL (SOILS) ENGINEER.

PAVEMENT REPLACEMENT REQUIREMENTS:

DUE TO ASPHALT PLANTS CLOSED IN THE WINTER, TEMPORARY PAVEMENT REPLACEMENTS SHALL BE AS PER THE NYSDOT PERMIT FIELD ENGINEER (AKA INSPECTOR) AND/OR RESIDENT ENGINEER. PERMITTEE MUST MONITOR AND MAINTAIN THE TEMPORARY PAVEMENT REPLACEMENT.

TEMPORARY PAVEMENT REPLACEMENTS ARE REQUIRED TO BE REPLACED IN-KIND IN THE SPRING WHEN THE WEATHER ALLOWS NYSDOT STANDARD SPECIFICATIONS TO BE MET.

EXCAVATION SPECIAL NOTES:

1. IF EXCAVATION COMES WITHIN A ONE ON ONE PLANE TO THE EDGE OF PAVEMENT THEN "SHEETING" SHALL BE USED TO PREVENT UNDERMINING OF THE PAVEMENT.
2. ANY EXCAVATION OF FIVE (5) FOOT DEPTH OR MORE REQUIRES A SHEETING DETAIL DESIGNED, STAMPED, AND SIGNED BY A NEW YORK STATE LICENSED PROFESSIONAL ENGINEER.
3. IF A PREFABRICATED "SHEETING BOX" IS TO BE USED, THERE ARE DESIGN PLANS FOR THESE ALSO. IF NOT STAMPED AND SIGNED BY A NEW YORK STATE LICENSED PROFESSIONAL ENGINEER, YOU MUST HAVE ONE REVIEW THE DESIGN, STAMP AND SIGN.
4. TRANSVERSE UTILITY CROSSINGS UNDER NYSDOT PAVEMENT SHALL BE A MINIMUM OF FIVE (5) FOOT BETWEEN THE TOP OF PAVEMENT AND TOP OF UTILITY.
5. LONGITUDINAL UTILITY RUNS, OUTSIDE THE PAVEMENT LIMITS MUST BE A MINIMUM OF THREE (3) FOOT TOP OF GRADE TO TOP OF UTILITY. THE PAVEMENT LIMITS ARE 50 FEET FROM THE HIGHWAY CENTER LINE.
6. LONGITUDINAL UTILITY RUNS SHOULD BE KEPT AS CLOSE TO THE RIGHT OF WAY LINE OR AS FAR FROM THE PAVEMENT AS POSSIBLE.

SUBSURFACE UTILITY LOCATIONS ARE BASED ON A COMPILATION OF FIELD EVIDENCE, AVAILABLE RECORD PLANS AND/OR UTILITY MARK-OUTS. THE LOCATION OR COMPLETENESS OF UNDERGROUND INFORMATION CANNOT BE GUARANTEED. VERIFY THE ACTUAL LOCATION OF ALL UTILITIES PRIOR TO EXCAVATION OR CONSTRUCTION.

811 Know what's **below.** **Call** before you dig.

ANY ALTERATION OF PLANS, SPECIFICATIONS, PLATS AND REPORTS BEARING THE SEAL OF A LICENSED PROFESSIONAL ENGINEER OR LICENSED LAND SURVEYOR IS A VIOLATION OF SECTION 7209 OF THE NEW YORK STATE EDUCATION LAW, EXCEPT AS PROVIDED FOR BY SECTION 7209, SUBSECTION 2.

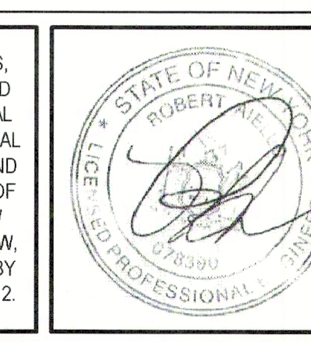

No.	Revision	Date	By
1.	ISSUED FOR BUILDING PERMIT	03/12/2021	JJ

Previous Editions Obsolete

JMC Planning, Engineering, Landscape Architecture & Land Surveying, PLLC
JMC Site Development Consultants, LLC
John Meyer Consulting, Inc.
120 BEDFORD ROAD • ARMONK, NY 10504
voice 914.273.5225 • fax 914.273.2102
www.jmcpllc.com

Drawn: SPG		Approved: MTP	
Scale: NOT TO SCALE			
Date: 12/15/2020			
Project No: 18158			
18158-HIGHWAY	COVER	COVER.scr	
Drawing No: HP-1			

NOT FOR CONSTRUCTION

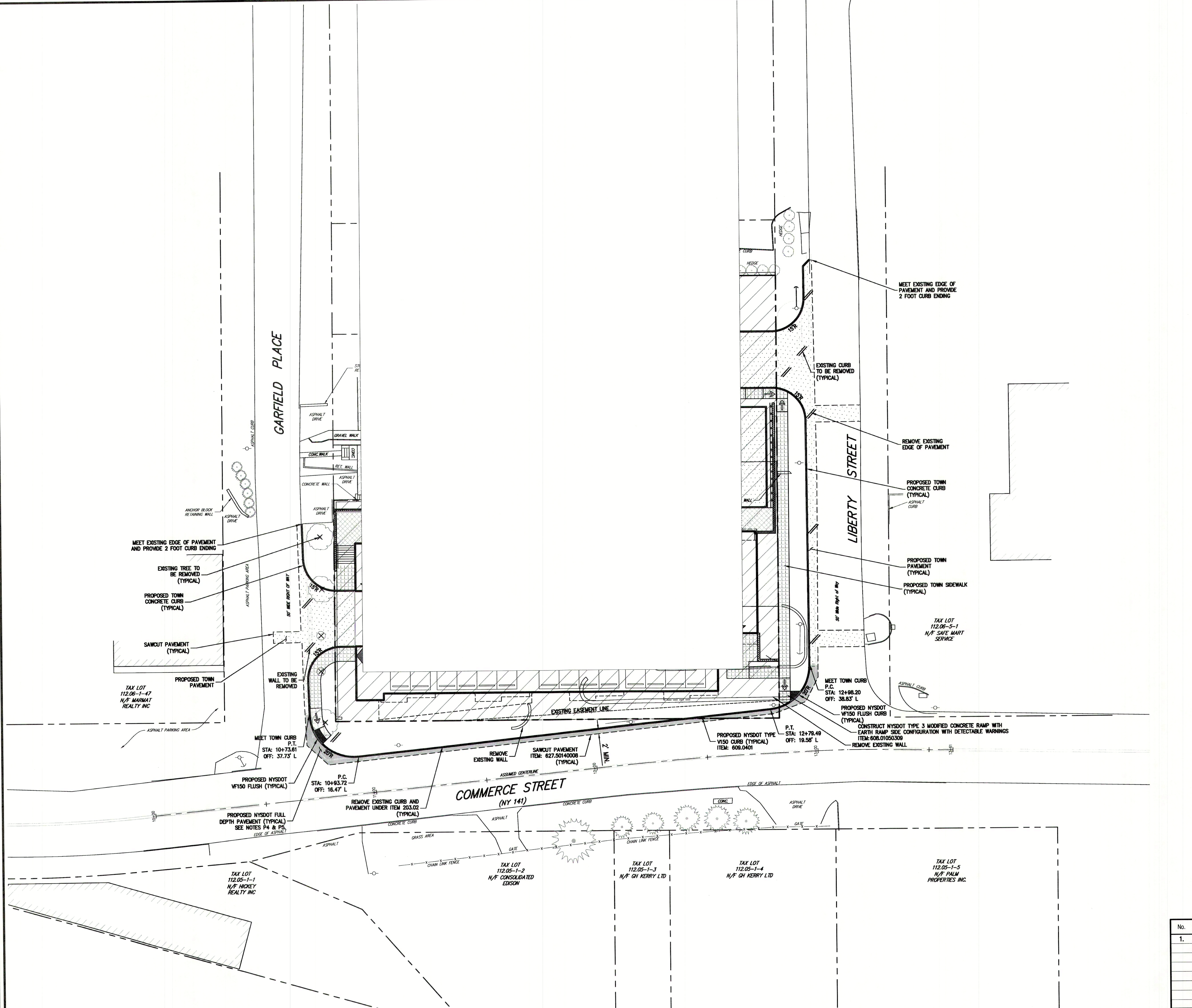

LEGEND

- EXISTING PROPERTY LINE
- ADJACENT PROPERTY LINE
- EXISTING EASEMENT LINE
- EXISTING BUILDING OVERHANG
- EXISTING BUILDING LINE
- EXISTING PAVEMENT EDGE
- EXISTING CURB LINE
- EXISTING STONE WALL
- EXISTING RETAINING WALL
- EXISTING GUIDE RAIL
- EXISTING FENCE
- EXISTING TREE AND DESIGNATION
- EXISTING PAINT
- EXISTING UTILITY POLE
- EXISTING LIGHT POLE
- EXISTING SIGN
- PROPOSED EASEMENT LINE
- ASSUMED CENTER LINE
- PROPOSED CONCRETE CURB
- PROPOSED NYSDOT CONCRETE CURB
- PROPOSED NYSDOT FLUSH CURB
- PROPOSED TOWN CONCRETE SIDEWALK
- PROPOSED SITE PAVEMENT
- PROPOSED NYSDOT FULL DEPTH PAVEMENT

NOTES:

1. EXISTING CONDITIONS DEPICTED ON THIS PLAN HAVE BEEN TAKEN FROM SURVEY TITLED, "TOPOGRAPHY OF PROPERTY PREPARED FOR 500 COMMERCE LLC," PREPARED BY TC MERRITS LAND SURVEYORS, DATED 11/10/2017.

PAVING NOTES:

P1. PRIOR TO STARTING ANY PAVING, THE CONTRACTOR SHALL COORDINATE A PRE-PAVING MEETING WITH THE NYSDOT, PROPERTY OWNER, ENGINEER OF RECORD, PAVING CONTRACTOR AND TESTING CONTRACTOR.

P2. ALL PAVING SHALL BE DONE IN ACCORDANCE WITH NEW YORK STATE DEPARTMENT OF TRANSPORTATION REQUIREMENTS AND SPECIFICATIONS.

P3. TACK COATS SHALL BE INSTALLED BETWEEN ALL SUPERPAVE COURSES, BETWEEN EXISTING PAVEMENT SURFACES & OVERLAYS AND BETWEEN NEW PAVEMENT & EXISTING PAVEMENT EDGES.

P4. PLACEMENT OF PROPOSED FULL DEPTH ASPHALT PAVEMENT IN WIDENING AREAS SHALL BE LIMITED TO WIDTHS OF 4 FEET OR GREATER AND SHALL BE COMPACTED WITH A WALK BEHIND ROLLER OR LARGER PIECE OF EQUIPMENT. HAND COMPACTION AND JUMPING JACKS SHALL NOT BE USED.

P5. FOR WIDENING AREAS LESS THAN 4 FEET, CONTRACTOR SHALL FILL AREA WITH CLASS C CONCRETE AND PROVIDE 1-1/2" TOP ASPHALT COURSE PAVEMENT ON TOP OF ROUGH CONCRETE SURFACE. ITEMS 402.127103, 407.0103.

P6. CONTRACTOR SHALL HAVE A WATER TRUCK ON SITE DURING PAVING ACTIVITIES AND SHALL WET AND COOL PAVEMENT AS NECESSARY, AS DIRECTED BY PAVEMENT TESTING TECHNICIAN.

APPLICANT/OWNER:
500 COMMERCE LLC
3 WEST STEVENS AVENUE
HAWTHORNE, NY 10532

ARCHITECT:
DIMOVSKI ARCHITECTURE PLLC
59 KENSICO ROAD
THORNWOOD, NY 10594

JMC Planning, Engineering, Landscape Architecture & Land Surveying, PLLC
JMC Site Development Consultants, LLC
John Meyer Consulting, Inc.
120 BEDFORD ROAD • ARMONK, NY 10504
voice 914.273.5225 • fax 914.273.2102
www.jmcpllc.com

LAYOUT PLAN PHASE 1

500 COMMERCE STREET REDEVELOPMENT
500 COMMERCE STREET
HAWTHORNE, NY 10532

ANY ALTERATION OF PLANS, SPECIFICATIONS, PLATS AND REPORTS BEARING THE SEAL OF A LICENSED PROFESSIONAL ENGINEER OR LICENSED LAND SURVEYOR IS A VIOLATION OF SECTION 7209 OF THE NEW YORK STATE EDUCATION LAW, EXCEPT AS PROVIDED FOR BY SECTION 7209, SUBSECTION 2.

No.	Revision	Date	By
1.	ISSUED FOR BUILDING PERMIT	03/12/2021	JJ

Previous Editions Obsolete

Drawn:	SPG
Approved:	MTP
Scale:	1" = 20'
Date:	12/15/2020
Project No:	18158
	WASH-HIGHWAY · LAY-1 · HWY-1_LAY.scr
Drawing No:	HP-2

NOT FOR CONSTRUCTION

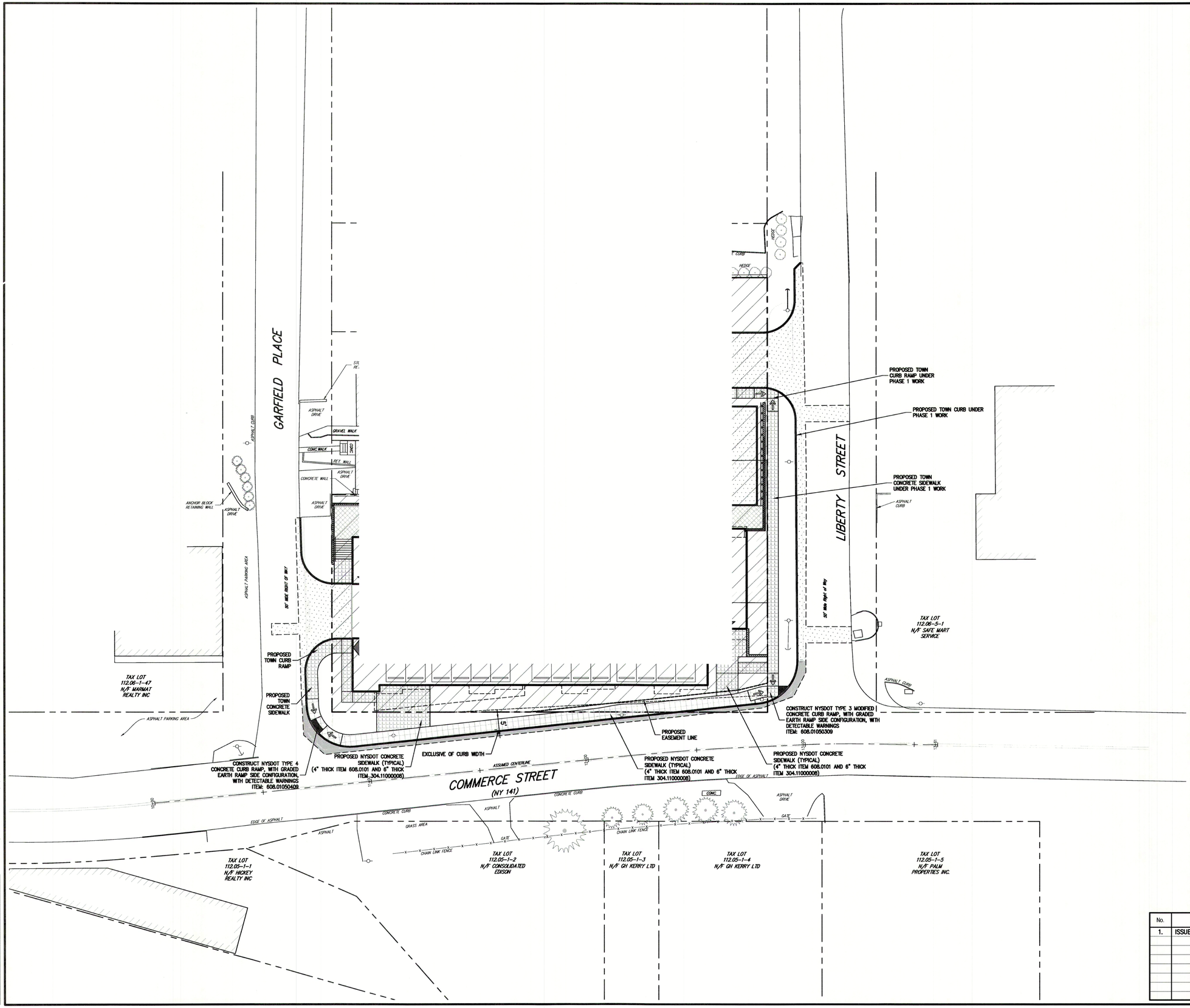

LEGEND

- EXISTING PROPERTY LINE
- ADJACENT PROPERTY LINE
- EXISTING EASEMENT LINE
- EXISTING BUILDING OVERHANG
- EXISTING BUILDING LINE
- EXISTING PAVEMENT EDGE
- EXISTING CURB LINE
- EXISTING STONE WALL
- EXISTING RETAINING WALL
- EXISTING GUIDE RAIL
- EXISTING FENCE
- EXISTING TREE AND DESIGNATION
- EXISTING PAINT
- EXISTING UTILITY POLE
- EXISTING LIGHT POLE
- EXISTING SIGN
- PROPOSED EASEMENT LINE
- ASSUMED CENTER LINE
- PROPOSED CONCRETE CURB
- PROPOSED NYSDOT CONCRETE CURB
- PROPOSED NYSDOT FLUSH CURB
- PROPOSED TOWN CONCRETE SIDEWALK
- PROPOSED NYSDOT CONCRETE SIDEWALK
- PROPOSED SITE PAVEMENT
- PROPOSED NYSDOT FULL DEPTH PAVEMENT

NOTES:

1. EXISTING CONDITIONS DEPICTED ON THIS PLAN HAVE BEEN TAKEN FROM SURVEY TITLED, "TOPOGRAPHY OF PROPERTY PREPARED FOR 500 COMMERCE LLC," PREPARED BY TC MERRITS LAND SURVEYORS, DATED 11/10/2017.

PAVING NOTES:

P1. PRIOR TO STARTING ANY PAVING, THE CONTRACTOR SHALL COORDINATE A PRE-PAVING MEETING WITH THE NYSDOT, PROPERTY OWNER, ENGINEER OF RECORD, PAVING CONTRACTOR AND TESTING CONTRACTOR.

P2. ALL PAVING SHALL BE DONE IN ACCORDANCE WITH NEW YORK STATE DEPARTMENT OF TRANSPORTATION REQUIREMENTS AND SPECIFICATIONS.

P3. TACK COATS SHALL BE INSTALLED BETWEEN ALL SUPERPAVE COURSES, BETWEEN EXISTING PAVEMENT SURFACES & OVERLAYS AND BETWEEN NEW PAVEMENT & EXISTING PAVEMENT EDGES.

P4. PLACEMENT OF PROPOSED FULL DEPTH ASPHALT PAVEMENT IN WIDENING AREAS SHALL BE LIMITED TO WIDTHS OF 4 FEET OR GREATER AND SHALL BE COMPACTED WITH A WALK BEHIND ROLLER OR LARGER PIECE OF EQUIPMENT. HAND COMPACTION AND JUMPING JACKS SHALL NOT BE USED.

P5. FOR WIDENING AREAS LESS THAN 4 FEET, CONTRACTOR SHALL FILL AREA WITH CLASS C CONCRETE AND PROVIDE 1-1/2" TOP ASPHALT COURSE PAVEMENT ON TOP OF ROUGH CONCRETE SURFACE. ITEMS 402.127103, 407.0103.

P6. CONTRACTOR SHALL HAVE A WATER TRUCK ON SITE DURING PAVING ACTIVITIES AND SHALL WET AND COOL PAVEMENT AS NECESSARY, AS DIRECTED BY PAVEMENT TESTING TECHNICIAN.

APPLICANT/OWNER:
500 COMMERCE LLC
3 WEST STEVENS AVENUE
HAWTHORNE, NY 10532

ARCHITECT:
DIMOVSKI ARCHITECTURE PLLC
59 KENSICO ROAD
THORNWOOD, NY 10594

JMC Planning, Engineering, Landscape Architecture & Land Surveying, PLLC
JMC Site Development Consultants, LLC
John Meyer Consulting, Inc.
120 BEDFORD ROAD - ARMONK, NY 10504
voice 914.273.5225 - fax 914.273.2102
www.jmcpllc.com

LAYOUT PLAN PHASE 2

500 COMMERCE STREET REDEVELOPMENT
500 COMMERCE STREET
HAWTHORNE, NY 10532

ANY ALTERATION OF PLANS, SPECIFICATIONS, PLATS AND REPORTS BEARING THE SEAL OF A LICENSED PROFESSIONAL ENGINEER OR LICENSED LAND SURVEYOR IS A VIOLATION OF SECTION 7209 OF THE NEW YORK STATE EDUCATION LAW, EXCEPT AS PROVIDED FOR BY SECTION 7209, SUBSECTION 2.

STATE OF NEW YORK · ROBERT T. PHILLIPS · 076390 · PROFESSIONAL ENGINEER

No.	Revision	Date	By
1.	ISSUED FOR BUILDING PERMIT	03/12/2021	JJ

Previous Editions Obsolete

Drawn:	SPG
Approved:	MTP
Scale:	1" = 20'
Date:	12/15/2020
Project No:	18158
18158-HIGHWAY	LAY-2	HWY-2_LAY.scr
Drawing No:	HP-2A

COPYRIGHT © 2021 by JMC - All Rights Reserved. No part of this document may be reproduced, stored in a retrieval system, or transmitted in any form or by means, electronic, mechanical, photocopying, recording or otherwise, without the prior written permission of JMC PLANNING, ENGINEERING, LANDSCAPE ARCHITECTURE & LAND SURVEYING, PLLC | JMC SITE DEVELOPMENT CONSULTING, LLC | JOHN MEYER CONSULTING, INC. JMC's instruments of service are for use solely with respect to this project. JMC shall be deemed the author of these documents and shall retain all common law, statutory and other reserved rights, including the copyright thereto.

NOT FOR CONSTRUCTION

PLANT SCHEDULE

DECIDUOUS TREES	QTY	BOTANICAL / COMMON NAME	SIZE	ROOT COND.	REMARKS
ARI	2	Acer rubrum `October Glory` TM / October Glory Maple	3" - 3 1/2" Cal.	B & B	
CB	10	Carpinus betulus `Fastigiata` / Pyramidal European Hornbean	1 gal		
CP	6	Carpinus caroliniana 'Palisade' / Palisade American Hornbeam	3" - 3 1/2" Cal.	B & B	
TC	2	Tilia cordata / Littleleaf Linden	3" - 3 1/2" Cal.	B & B	
ZC	3	Zelkova carpinifolia / Zelkova	3" - 3 1/2" Cal.	B & B	
SHRUBS	QTY	BOTANICAL / COMMON NAME	SIZE	ROOT COND.	REMARKS
IS	26	Ilex glabra `Shamrock` / Inkberry	B & B	3` - 4` HT.	
IP	5	Ilex x meserveae `Blue Prince` TM / Blue Prince Holly	5 gal	Cont.	
IB2	23	Ilex x meserveae `Blue Princess` TM / Blue Princess Holly	5 gal	Cont.	
GROUND COVERS	QTY	BOTANICAL / COMMON NAME	SIZE		REMARKS
LM	221	Liriope muscari / Lily Turf	1 gal		
GRASSES	QTY	BOTANICAL / COMMON NAME	SIZE		REMARKS
PED	156	Pennisetum Alopecuroides `Hameln` / Hameln Dwarf Fountain Grass	1 gal		
PR	80	Pennisetum rubrum / Fountain Grass	1 gal		

LEGEND

- EXISTING PROPERTY LINE
- EXISTING BUILDING LINE
- EXISTING PAVEMENT EDGE
- EXISTING CURB LINE
- EXISTING FENCE
- EXISTING TREE AND DESIGNATION
- EXISTING PAINT
- EXISTING UTILITY POLE
- EXISTING SIGN
- PROPOSED NYSDOT GRANITE CURB
- PROPOSED FLUSH CURB
- PROPOSED SITE CONCRETE CURB
- PROPOSED CONCRETE SIDEWALK
- PROPOSED STOP BAR
- PROPOSED 2-4" WIDE YELLOW LINES 8"O.C.
- TRAFFIC SIGN LOCATION & DESIGNATION
- PROPOSED DECIDUOUS TREE
- PROPOSED FLOWERING TREE
- PROPOSED SHRUBS/PERENNIALS
- PROPOSED SHRUB AREA

NOTES:

1. EXISTING CONDITIONS DEPICTED ON THIS PLAN HAVE BEEN TAKEN FROM SURVEY TITLED, "TOPOGRAPHY OF PROPERTY PREPARED FOR 500 COMMERCE LLC," PREPARED BY TC MERRITS LAND SURVEYORS, REVISED 02/22/2018.

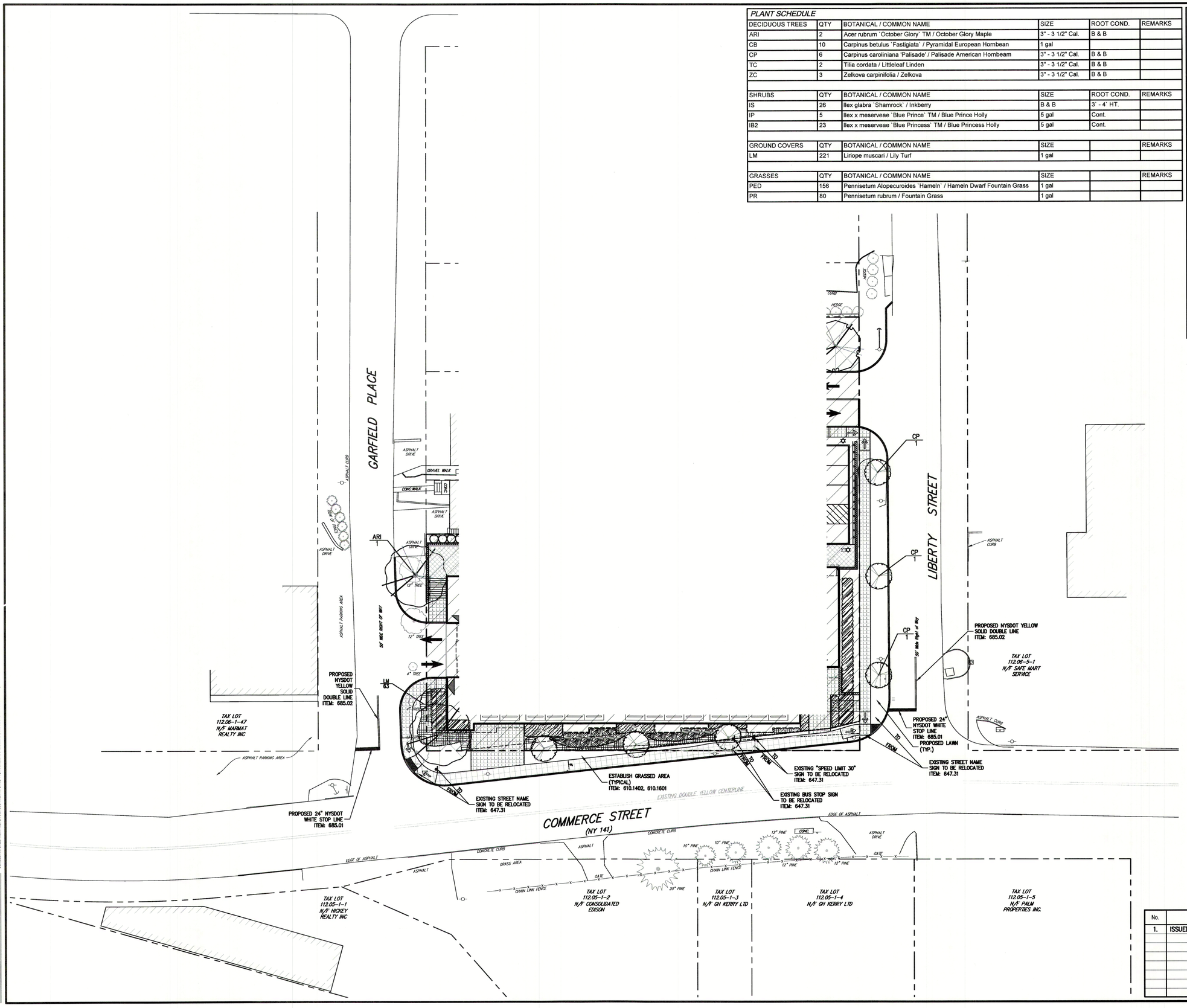

APPLICANT/OWNER:
500 COMMERCE LLC
3 WEST STEVENS AVENUE
HAWTHORNE, NY 10532

ARCHITECT:
DIMOVSKI ARCHITECTURE PLLC
59 KENSICO ROAD
THORNWOOD, NY 10594

JMC Planning, Engineering, Landscape Architecture & Land Surveying, PLLC
JMC Site Development Consultants, LLC
John Meyer Consulting, Inc.
120 BEDFORD ROAD • ARMONK, NY 10504
voice 914.273.5225 • fax 914.273.2102
www.jmcpllc.com

SIGNING, STIPING & LANDSCAPING PLAN

500 COMMERCE STREET REDEVELOPMENT
500 COMMERCE STREET
HAWTHORNE, NY 10532

ANY ALTERATION OF PLANS, SPECIFICATIONS, PLATS AND REPORTS BEARING THE SEAL OF A LICENSED PROFESSIONAL ENGINEER OR LICENSED LAND SURVEYOR IS A VIOLATION OF SECTION 7209 OF THE NEW YORK STATE EDUCATION LAW, EXCEPT AS PROVIDED FOR BY SECTION 7209, SUBSECTION 2.

STATE OF NEW YORK · ROBERT M. PE · 079396 · LICENSED PROFESSIONAL ENGINEER

No.	Revision	Date	By
1.	ISSUED FOR BUILDING PERMIT	03/12/2021	JJ
	Previous Editions Obsolete		

Drawn: SPG Approved: MTP
Scale: 1" = 20'
Date: 12/15/2020
Project No: 18158
18158-HKRMKY | SIGNING | STRIPING.scr
Drawing No:
HP-3

COPYRIGHT © 2019 by JMC. All Rights Reserved. No part of this document may be reproduced, stored in a retrieval system, or transmitted in any form or by means, electronic, mechanical, photocopying, recording or otherwise, without the prior written permission of JMC PLANNING, ENGINEERING, LANDSCAPE ARCHITECTURE & LAND SURVEYING, PLLC / JMC SITE DEVELOPMENT CONSULTANTS, LLC / JOHN MEYER CONSULTING, INC. (JMC). Any modifications to this document and/or its use without the written permission of JMC shall render such use unlawful and actionable.

NOT FOR CONSTRUCTION

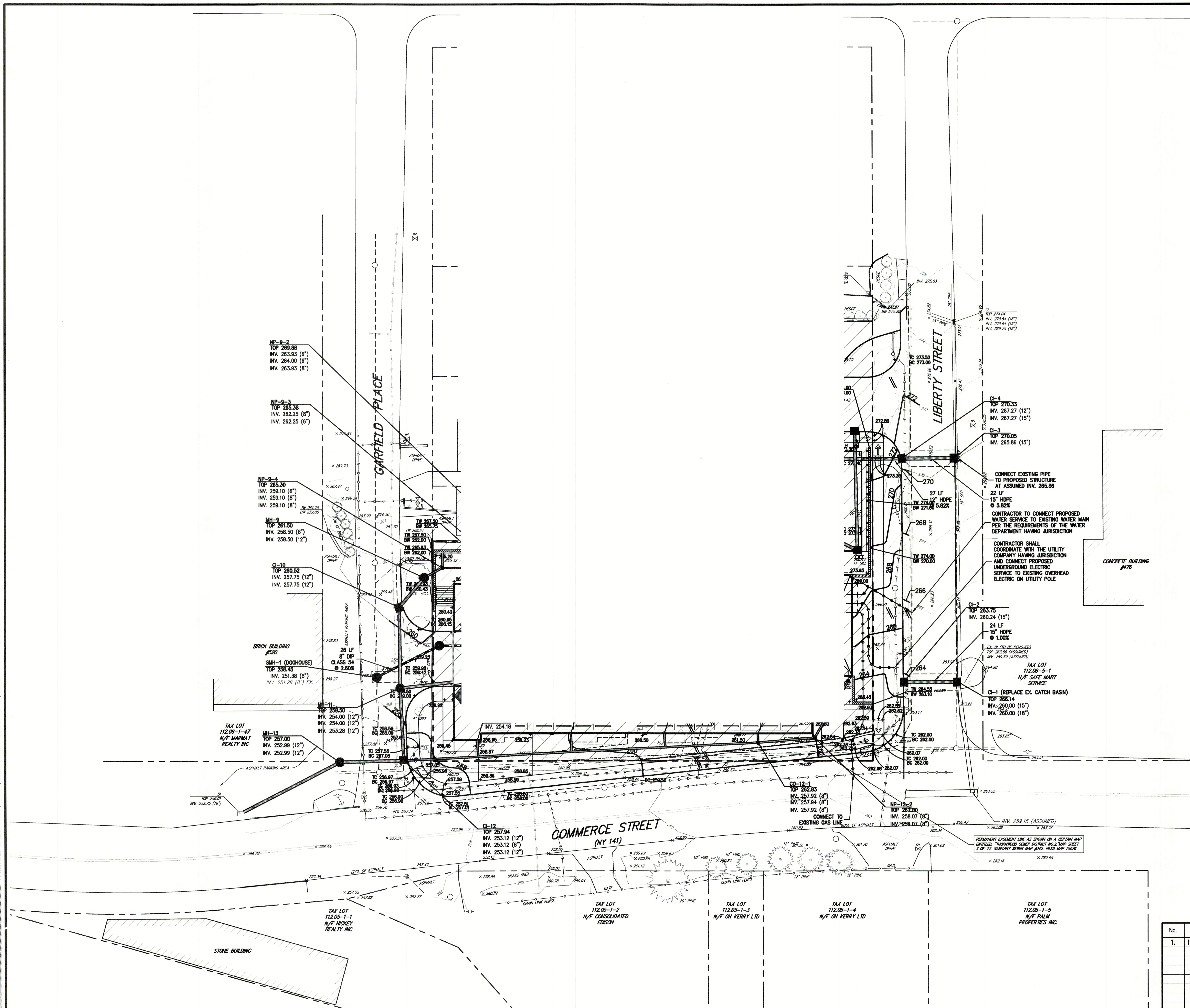

LEGEND

- EXISTING PROPERTY LINE
- ADJACENT PROPERTY LINE
- EXISTING EASEMENT LINE
- PROPOSED EASEMENT LINE
- EXISTING BUILDING OVERHANG
- EXISTING BUILDING LINE
- EXISTING PAVEMENT EDGE
- EXISTING CURB LINE
- EXISTING CONTOUR (172)
- EXISTING INDEX CONTOUR (170)
- EXISTING SPOT GRADE (191.00)
- EXISTING FENCE
- EXISTING DRAIN INLET
- EXISTING MANHOLE
- EXISTING UTILITY POLE
- EXISTING LIGHT POLE
- EXISTING SIGN
- PROPOSED BUILDING LINE
- PROPOSED CONCRETE CURB
- PROPOSED CONCRETE SIDEWALK
- PROPOSED DROP CURB AND RAMP
- PROPOSED FINISHED GRADE (200)
- PROPOSED SPOT GRADE (191.00)
- SMH — PROPOSED SANITARY SEWER MANHOLE
- CI — PROPOSED TYPE CI DRAIN INLET
- EXISTING FEATURE TO BE REMOVED

NOTES:

1. EXISTING CONDITIONS DEPICTED ON THIS PLAN HAVE BEEN TAKEN FROM SURVEY TITLED, "TOPOGRAPHY OF PROPERTY PREPARED FOR 500 COMMERCE LLC," PREPARED BY TC MERRITS LAND SURVEYORS, DATED 11/10/2017.
2. ALL STORMWATER MANAGEMENT PRACTICES SHALL REMAIN UNDISTURBED AND BE PROTECTED FROM HEAVY MACHINERY TRAFFIC DURING CONSTRUCTION. HOWEVER DURING CONSTRUCTION OF THE PRACTICE THE CONTRACTOR SHALL MINIMIZE AND AVOID HEAVY MACHINERY TRAFFIC TO THE MAXIMUM EXTENT PRACTICABLE. THERE SHALL BE NO STORAGE OF MATERIALS WITHIN AREAS TO BE USED FOR STORMWATER MANAGEMENT PRACTICES. THE CONTRACTOR SHALL INSTALL CONSTRUCTION FENCE AROUND THE PRACTICE TO DISCOURAGE VEHICLE TRAFFIC.
3. ALL FILLS SHALL BE COMPACTED TO PROVIDE STABILITY OF MATERIAL AND TO PREVENT SETTLEMENT.
4. EXCAVATIONS AND FILLS SHALL NOT ENDANGER ADJOINING PROPERTIES, NOR DIVERT WATER ONTO THE PROPERTY OF OTHERS AT ANY TIME DURING THE COURSE OF CONSTRUCTION.
5. CONTRACTOR SHALL REFER TO EROSION AND SEDIMENT CONTROL PLAN FOR FURTHER DIRECTION REGARDING SITE STABILIZATION THROUGHOUT THE COURSE OF CONSTRUCTION.

GRADING AND UTILITY NOTES:

GU1. UNLESS OTHERWISE DIRECTED, CONTRACTOR, AT HIS OWN EXPENSE, WILL PROVIDE A GEOTECHNICAL ENGINEER AS REQUIRED BY THE OWNERS REPRESENTATIVE TO EVALUATE SOIL CONDITIONS RELATED TO TRENCHING, PAVING, SUBBASE AND OTHER CONDITIONS AS REQUIRED.

GU2. DURING CONSTRUCTION, PRIOR TO CONTRACTOR PERFORMING ROCK REMOVAL, GEOTECHNICAL ENGINEER SHALL PERFORM SITE INVESTIGATION AND SHALL PROVIDE ROCKCUT/ROCK REMOVAL RECOMMENDATIONS AND PROJECT SPECIFICATIONS TO CONTRACTOR FOR IMPLEMENTATION.

GU3. CONTRACTOR SHALL ADJUST ALL EXISTING STRUCTURES WITHIN THE WORK AREA TO THE PROPOSED GRADE SHOWN ON THE DRAWINGS AS REQUIRED.

APPLICANT/OWNER:
500 COMMERCE LLC
3 WEST STEVENS AVENUE
HAWTHORNE, NY 10532

ARCHITECT:
DIMOVSKI ARCHITECTURE PLLC
59 KENSICO ROAD
THORNWOOD, NY 10594

JMC Planning, Engineering, Landscape Architecture & Land Surveying, PLLC
JMC Site Development Consultants, LLC
John Meyer Consulting, Inc.
120 BEDFORD ROAD · ARMONK, NY 10504
voice 914.273.5225 · fax 914.273.2102
www.jmcpllc.com

JMC

GRADING & UTILITIES PLAN

500 COMMERCE STREET REDEVELOPMENT
500 COMMERCE STREET
HAWTHORNE, NY 10532

ANY ALTERATION OF PLANS, SPECIFICATIONS, PLATS AND REPORTS BEARING THE SEAL OF A LICENSED PROFESSIONAL ENGINEER OR LICENSED LAND SURVEYOR IS A VIOLATION OF SECTION 7209 OF THE NEW YORK STATE EDUCATION LAW, EXCEPT AS PROVIDED FOR BY SECTION 7209, SUBSECTION 2.

STATE OF NEW YORK · ROBERT ... · 078390 · LICENSED PROFESSIONAL ENGINEER

No.	Revision	Date	By
1.	ISSUED FOR BUILDING PERMIT	03/12/2021	JJ
	Previous Editions Obsolete		

Drawn: SPG		Approved: MTP	
Scale: 1" = 20'			
Date: 12/15/2020			
Project No: 18158			
18158-HIGHWAY	GRAD-UTIL	GRAD.scr	
Drawing No: HP-4			

COPYRIGHT © 2018 by JMC. All Rights Reserved.

NOT FOR CONSTRUCTION

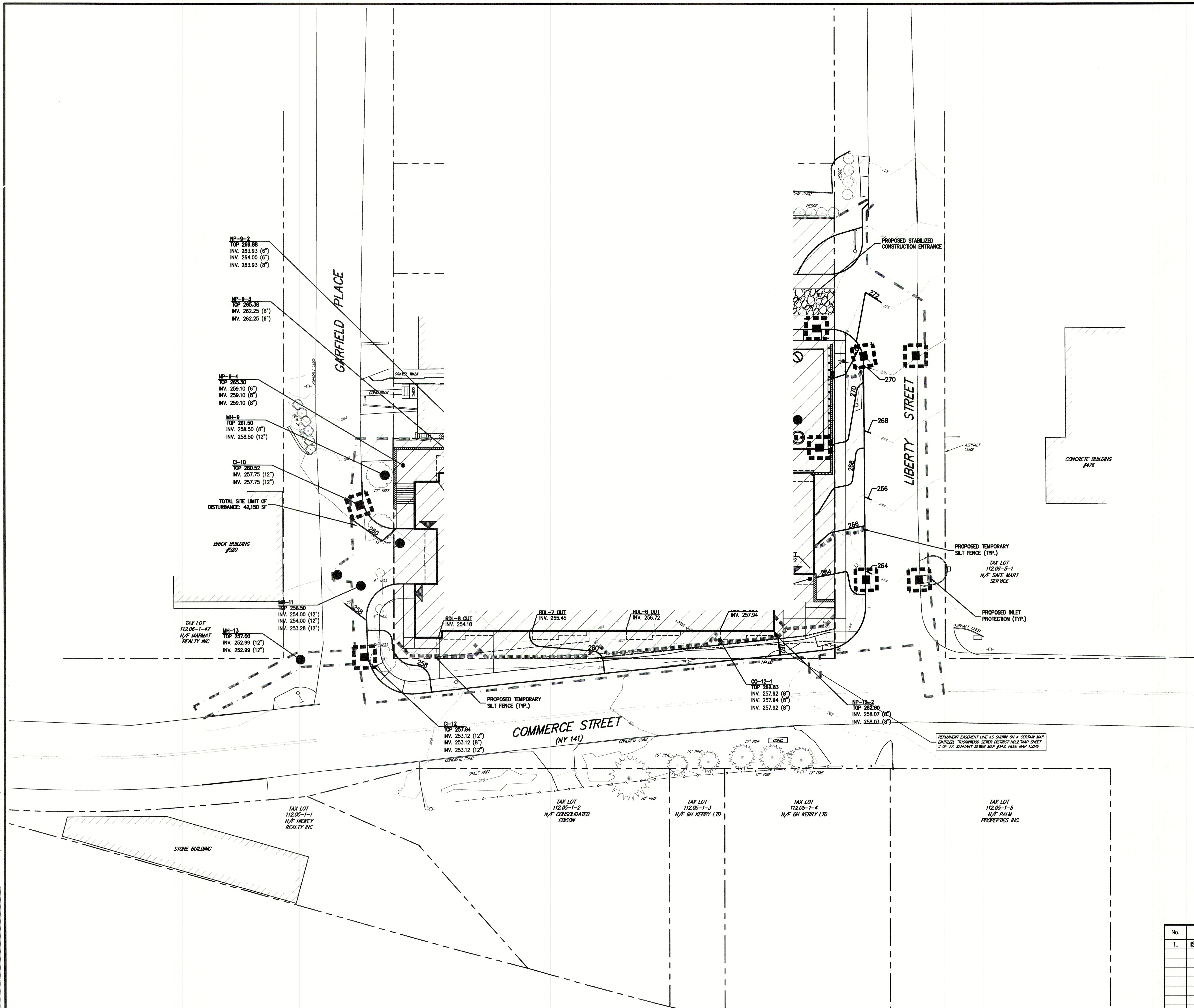

LEGEND

[symbol]	PROPOSED INLET PROTECTION
[symbol]	PROPOSED SILT FENCE
[symbol]	EXISTING FEATURE TO BE REMOVED

NOTES:

1. EXISTING CONDITIONS DEPICTED ON THIS PLAN HAVE BEEN TAKEN FROM SURVEY TITLED, "TOPOGRAPHY OF PROPERTY PREPARED FOR 500 COMMERCE LLC," PREPARED BY TC MERRITS LAND SURVEYORS, DATED 11/10/2017.
2. THIS PLAN IS FOR TEMPORARY EROSION AND SEDIMENT CONTROL INFORMATION ONLY.
3. PRIOR TO BEGINNING ANY CLEARING, GRUBBING OR EXCAVATION, ALL EROSION AND SEDIMENT CONTROL MEASURES SHALL BE INSTALLED IN ACCORDANCE WITH ALL THE PLANS AND SPECIFICATIONS. EROSION AND SEDIMENT CONTROL MEASURES SHALL BE MAINTAINED UNTIL THE SITE IS STABILIZED. FINAL STABILIZATION OF LANDSCAPED AREAS SHALL BE IN ACCORDANCE WITH THE LANDSCAPE PLAN.
4. THE CONTRACTOR SHALL INSPECT AND MAINTAIN ON-SITE EROSION AND SEDIMENT CONTROL MEASURES ON A DAILY BASIS. ALL COLLECTED SEDIMENT WITHIN SEDIMENT BARRIERS SHALL BE REMOVED PERIODICALLY AS REQUIRED TO MAINTAIN THE FUNCTION OF THE SEDIMENT BARRIERS. ALL SEDIMENT COLLECTED SHALL BE RESPREAD ON-SITE WITHIN STABILIZED AREAS AS DIRECTED BY THE OWNERS REPRESENTATIVE.
5. THE CONTRACTOR SHALL INSPECT DOWNSTREAM CONDITIONS FOR EVIDENCE OF SEDIMENTATION ON A WEEKLY BASIS, AFTER EACH RAINSTORM, AND AS MAY BE REQUIRED OR DIRECTED BY ALL APPLICABLE APPROVALS AND PERMITS. THE CONTRACTOR SHALL IMMEDIATELY PROVIDE A WRITTEN REPORT ON FINDINGS OF SEDIMENT IN DOWNSTREAM AREAS TO ALL AUTHORITIES HAVING JURISDICTION AND MAKE REPAIRS AS REQUIRED OR DIRECTED.
6. ADDITIONAL EROSION AND SEDIMENT CONTROL MEASURES SHALL BE INSTALLED BY THE CONTRACTOR AS REQUIRED/WARRANTED BY FIELD CONDITIONS AND AS DIRECTED BY THE OWNERS REPRESENTATIVE, JMC, AND/OR ANY AUTHORITY HAVING JURISDICTION.
7. STOCKPILING OF CONSTRUCTION MATERIAL SHALL BE PLACED ON-SITE IN THE AREA DESIGNATED ON THIS PLAN OR AS APPROVED BY THE OWNERS REPRESENTATIVE. STOCKPILED EXCAVATED MATERIAL SHALL HAVE TWO ROWS OF SILT FENCE LOCATED AROUND ITS PERIMETER. ALL STOCKPILED MATERIAL SHALL BE MAINTAINED IN AN ORDERLY MANNER SO AS NOT TO IMPEDE ON PEDESTRIAN AND/OR VEHICULAR TRAFFIC CIRCULATION ROUTES.
7. DUST SHALL BE CONTROLLED BY SPRINKLING OR OTHER APPROVED METHODS AS NECESSARY, OR AS DIRECTED BY THE OWNERS REPRESENTATIVE.
8. ALL STORMWATER MANAGEMENT PRACTICES SHALL REMAIN UNDISTURBED AND BE PROTECTED FROM HEAVY MACHINERY TRAFFIC DURING CONSTRUCTION. HOWEVER DURING CONSTRUCTION OF THE PRACTICE THE CONTRACTOR SHALL MINIMIZE AND AVOID HEAVY MACHINERY TRAFFIC TO THE MAXIMUM EXTENT PRACTICABLE. THERE SHALL BE NO STORAGE OF MATERIALS WITHIN AREAS TO BE USED FOR STORMWATER MANAGEMENT PRACTICES. THE CONTRACTOR SHALL INSTALL CONSTRUCTION FENCE AROUND THE PRACTICE TO DISCOURAGE VEHICLE TRAFFIC.

EROSION AND SEDIMENT CONTROL NOTES:

ESC1. ALL PROPOSED INLET PROTECTION AND SEDIMENT AND EROSION CONTROL MEASURES SHALL BE IN ACCORDANCE WITH THE NEW YORK STATE DEPARTMENT OF ENVIRONMENTAL CONSERVATION "NEW YORK STATE STANDARDS AND SPECIFICATIONS FOR EROSION AND SEDIMENT CONTROL," DATED AUGUST 2005.

ESC2. ALL SEDIMENT AND EROSION CONTROL MEASURES SHALL BE INSTALLED AND MAINTAINED PRIOR TO BEGINNING ANY CLEARING, GRUBBING OR EXCAVATION.

ESC3. NYSDOT REINFORCED SILT FENCE, ITEM 209.13, TO BE USED IN CONJUNCTION WITH CHECK DAMS (NOT SHOWN) AND TO BE INSTALLED AND MAINTAINED AROUND ALL DISTURBED AREAS, AS DIRECTED BY ENGINEER.

ESC4. DISTURBED AREAS IDLE FOR MORE THEN 48 HOURS SHALL BE STABILIZED.

ESC5. DURING CONSTRUCTION, ALL EXPOSED AREAS OF SOIL THAT WILL NOT RECEIVE PERMANENT SURFACE TREATMENT IMMEDIATELY (WITHIN SEVEN DAYS) AND ALL PILES OF DIRT SHALL BE TEMPORARILY SEEDED BY THE CONTRACTOR WITH A MIXTURE OF PERENNIAL RYE GRASS, ANNUAL RYE GRASS, AND WINTER RYE. GRASS SEED MIX FOR SEDIMENT AND EROSION CONTROL MAY BE APPLIED BY EITHER MECHANICAL OR HYDROSEEDING METHODS. SEEDED AREAS SHALL BE MULCHED WITH STRAW AT A RATE OF 2 TONS PER ACRE (90 LBS. PER 1,000 S.F.) SUCH THAT THE MULCH FORMS A CONTINUOUS BLANKET.

ESC6. ALL STOCKPILES OF DIRT SHALL BE RIMMED WITH SILT FENCE BY THE CONTRACTOR IN ADDITION TO BEING TEMPORARILY SEEDED.

ESC7. SILT FENCE SHALL REMAIN IN PLACE UNTIL PILE HAS BEEN REMOVED AND SOIL HAS BEEN PERMANENTLY STABILIZED. FOR THOSE AREAS OF EXPOSED SOIL WHERE IT IS NOT FEASIBLE TO ESTABLISH TEMPORARY GROUND COVER DUE TO CONSTRUCTION OPERATIONS, THE CONTRACTOR SHALL MOISTEN WITH WATER THOSE AREAS AT LEAST TWICE A DAY IN ORDER TO CONTROL DUST. CONTRACTOR SHALL INCREASE THE MOISTENING OF SUCH AREAS TO FOUR TIMES A DAY DURING PERIODS OF LITTLE RAIN AS DETERMINED BY THE OWNER'S FIELD REPRESENTATIVE, THE APPROVAL AUTHORITY AND/OR THE CONTRACTOR.

ESC8. EXISTING AND PROPOSED CATCH BASINS SHALL BE PROTECTED WITH SILT SACK INLET PROTECTION. INLET PROTECTION SHALL BE INSTALLED BY THE CONTRACTOR AND SHALL BE MAINTAINED DURING CONSTRUCTION. INLET PROTECTION SHALL BE REMOVED ONLY AFTER ALL CONSTRUCTION HAS BEEN COMPLETED AND ALL SOURCES OF EROSION HAVE BEEN PERMANENTLY STABILIZED.

ESC9. ALL SEDIMENT AND EROSION CONTROL MEASURES SHALL BE INSPECTED BY THE CONTRACTOR IMMEDIATELY AFTER EACH RAINFALL EVENT AND AT LEAST DAILY DURING PROLONGED RAINFALL. ANY REQUIRED REPAIRS SHALL BE MADE BY THE CONTRACTOR IMMEDIATELY AT NO ADDITIONAL COST.

ESC10. SEDIMENT DEPOSITS SHALL BE REMOVED BY THE CONTRACTOR WHEN THEY REACH APPROXIMATELY ONE-HALF THE HEIGHT OF THE BARRIER. SEDIMENTS SHALL BE DISPOSED OF IN A MANNER THAT DOES NOT RESULT IN ADDITIONAL EROSION OR POLLUTION.

ESC11. CONTRACTOR SHALL COORDINATE CONSTRUCTION SO AT TO PERFORM DRAINAGE WORK DURING DRY PERIODS AND TO MAINTAIN EXISTING FLOWS AT ALL TIMES DURING THE REMOVAL & REPLACEMENT OF PIPES AND STRUCTURES. UPON COMPLETION OF WORK, CONTRACTOR SHALL CLEAN ALL DOWNSTREAM PIPES AND STRUCTURES AS DIRECTED BY APPROVAL AUTHORITIES (AT NO ADDITIONAL COST) TO REMOVE SEDIMENT ASSOCIATED WITH THE CONSTRUCTION.

ANY ALTERATION OF PLANS, SPECIFICATIONS, PLATS AND REPORTS BEARING THE SEAL OF A LICENSED PROFESSIONAL ENGINEER OR LICENSED LAND SURVEYOR IS A VIOLATION OF SECTION 7209 OF THE NEW YORK STATE EDUCATION LAW, EXCEPT AS PROVIDED FOR BY SECTION 7209, SUBSECTION 2.

APPLICANT/OWNER:
500 COMMERCE LLC
3 WEST STEVENS AVENUE
HAWTHORNE, NY 10532

ARCHITECT:
DIMOVSKI ARCHITECTURE PLLC
59 KENSICO ROAD
THORNWOOD, NY 10594

JMC Planning, Engineering, Landscape Architecture & Land Surveying, PLLC
JMC Site Development Consultants, LLC
John Meyer Consulting, Inc.
120 BEDFORD ROAD • ARMONK, NY 10504
voice 914.273.5225 • fax 914.273.2102
www.jmcpllc.com

EROSION AND SEDIMENT CONTROL PLAN

500 COMMERCE STREET REDEVELOPMENT
500 COMMERCE STREET
HAWTHORNE, NY 10532

No.	Revision	Date	By
1.	ISSUED FOR BUILDING PERMIT	03/12/2021	JJ

Previous Editions Obsolete

Drawn:	SPG
Approved:	MTP
Scale:	1" = 20'
Date:	12/15/2020
Project No:	18158
Drawing No:	HP-5

NOT FOR CONSTRUCTION

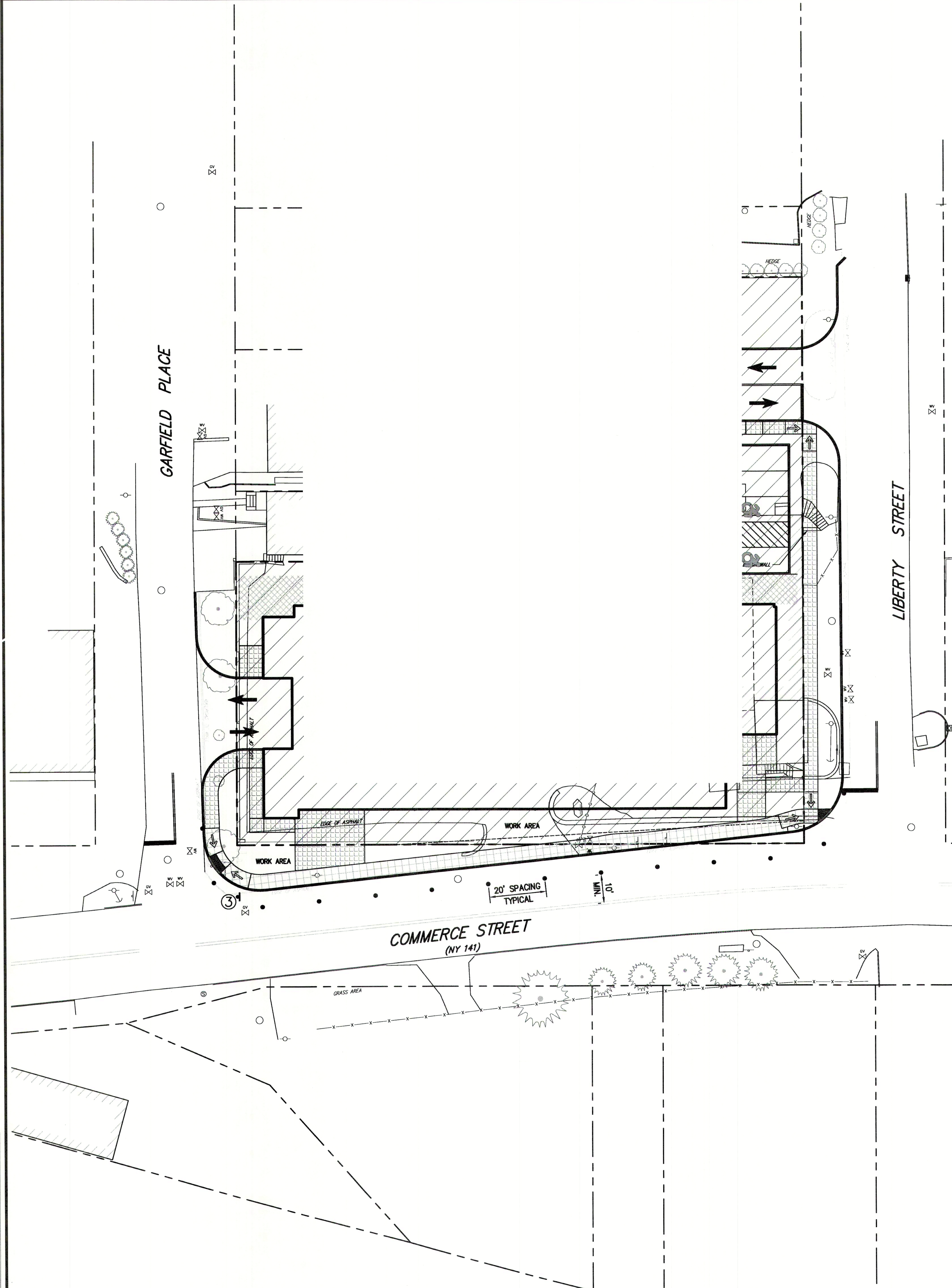

WORK ZONE TRAFFIC CONTROL NOTES:

WZ1. ALL WORK SHALL BE IN ACCORDANCE WITH THE REQUIREMENTS, SPECIFICATIONS, AND CONDITIONS IMPOSED BY THE NEW YORK STATE DEPARTMENT OF TRANSPORTATION.

WZ2. WORK ZONE TRAFFIC CONTROL SHALL BE PROVIDED IN ACCORDANCE WITH THE FEDERAL MANUAL OF UNIFORM TRAFFIC CONTROL DEVICES, THE NEW YORK STATE SUPPLEMENT, SECTION 619 OF THE N.Y.S.D.O.T. STANDARD SPECIFICATIONS, AND ANY PROVISIONS CONTAINED IN THE PLANS. THE TYPICAL DETAILS DEPICTED ON THE STANDARD SHEETS AND IN THE MUTCD REFLECT THE MINIMUM REQUIREMENTS.

WZ3. THE CONTRACTOR MUST SUBMIT TO THE ENGINEER, IN WRITING, PROPOSED REVISIONS TO THE TRAFFIC CONTROL PLAN FOR REVIEW AND APPROVAL BY THE REGIONAL DIRECTOR OR HIS/HER DESIGNEE FIVE (5) WORK DAYS PRIOR TO THE PLANNED IMPLEMENTATION OF SUCH PROPOSED REVISIONS, EXCEPT FOR CHANGES THAT ALTER THE SCOPE OF THE TRAFFIC CONTROL PLAN. SUCH CHANGES IN SCOPE MUST BE SUBMITTED TO THE ENGINEER FOR APPROVAL BY THE REGIONAL DIRECTOR OR HIS/HER DESIGNEE THIRTY (30) WORKING DAYS PRIOR TO IMPLEMENTATION OF SUCH REVISIONS.

WZ4. THE CONTRACTOR SHALL PROVIDE THE ENGINEER, IN WRITING, WITH THE NAMES, ADDRESSES, AND TELEPHONE NUMBERS OF STAFF WHO ARE AUTHORIZED TO SECURE LABOR, MATERIALS, AND EQUIPMENT FOR EMERGENCY REPAIRS OUTSIDE NORMAL WORKING HOURS. THE ENGINEER WILL PROVIDE THE SUBMITTED INFORMATION TO REGIONAL MANAGEMENT, THE NEW YORK STATE POLICE, THE RESIDENT ENGINEER, AND THE LOCAL POLICE.

WZ5. THE CONTRACTOR'S OPERATIONS SHALL KEEP INTERFERENCE ON ALL ROADWAYS TO AN ABSOLUTE MINIMUM. TRAFFIC STOPPAGES WILL NOT BE PERMITTED UNLESS APPROVED IN ADVANCE BY THE N.Y.S.D.O.T.. NO LANE CLOSURE SHALL BE ALLOWED BETWEEN 5:30–9:30 AM AND 3:00–7:00 PM.

WZ6. THE CONTRACTOR SHALL MAINTAIN A MINIMUM 500 FOOT LONGITUDINAL DISTANCE BETWEEN CONSTRUCTION OPERATIONS ON ALTERNATE SIDES OF THE ROADWAY, UNLESS OTHERWISE APPROVED BY THE ENGINEER.

WZ7. WHEN TWO OR MORE AREAS ARE ADJACENT, OVERLAP, OR ARE IN CLOSE PROXIMITY, THE CONTRACTOR SHALL ENSURE THERE ARE NO CONFLICTING SIGNS AND THAT LANE CONTINUITY IS MAINTAINED THROUGHOUT ALL WORK AREAS.

WZ8. DIAMOND SHAPED ADVANCED WARNING SIGNS SHALL BE USED FOR ALL ADVANCE WARNING SIGNS THAT MAY BE EITHER DIAMOND OR RECTANGULAR SHAPED ACCORDING TO THE FEDERAL MANUAL OF UNIFORM TRAFFIC CONTROL DEVICES AND THE NEW YORK STATE SUPPLEMENT. THE BOTTOM OF THE SIGN SHALL BE 7 FEET MINIMUM ABOVE THE GROUND AND 2 FEET MINIMUM FROM FACE OF CURB OR EDGE OF TRAVELED WAY. THE SITE ENGINEER AND/OR NYSDOT MAY ORDER ADDITIONAL OR MODIFIED DEVICES AND/OR METHODS TO MEET FIELD CONDITIONS.

WZ9. THE LOCATIONS OF THE SIGNS SHOWN ON THE WORK ZONE TRAFFIC CONTROL PLANS AND DETAILS MAY BE ADJUSTED BASED ON SIGHT DISTANCE AND OTHER CONSIDERATIONS. THE FINAL LOCATIONS OF SIGNS ARE SUBJECT TO APPROVAL OF THE ENGINEER.

WZ10. ANY EXISTING SIGNS (NOT SHOWN), INCLUDING OVERHEAD SIGNS, WHICH CONFLICT WITH THE TEMPORARY TRAFFIC CONTROL SIGN LAYOUT SHALL BE COVERED, REMOVED, STORED OR RESET, AS APPROVED BY THE ENGINEER. ALL APPROPRIATE EXISTING SIGNS SHALL BE RESTORED TO THEIR ORIGINAL CONDITION AND/OR LOCATION UNLESS OTHERWISE REPLACED IN THIS CONTRACT.

WZ11. SIGNS AT OR NEAR INTERSECTIONS SHALL BE PLACED SO THAT THEY DO NOT OBSTRUCT A MOTORIST'S LINE OF SIGHT.

WZ12. THE DIMENSIONS OF WORK ZONE TRAFFIC CONTROL SIGNS ARE DESCRIBED IN THE MUTCD. ANY CHANGES TO THE DIMENSIONS SHALL BE APPROVED BY THE REGIONAL DIRECTOR OR BY HIS/HER DESIGNEE.

WZ13. NYR9–12 MAY BE USED IN PLACE OF NYR9–11.

WZ14. ALL WORK ZONE TRAFFIC CONTROL SIGNAGE AND CONSTRUCTION SIGNAGE SHALL BE CLEAN AND REFLECTIVE.

WZ15. THE CERTIFIED FLAGGER SHALL USE STOP–SLOW PADDLES (MINIMUM 24 INCHES IN SIZE) WHERE FEASIBLE. FLAGS MAY BE USED AT INTERSECTIONS OR WHERE THE BACK SIDE MESSAGE IS INAPPROPRIATE FOR OPPOSING TRAFFIC OR WHERE CONDITIONS SUCH AS HIGH WIND MAKE THE USE OF A PADDLE IMPRACTICAL.

WZ16. N.Y.S.D.O.T. DRUMS, IF USED FOR TRAFFIC WARNING, SHALL BE A MINIMUM OF 36 INCHES IN HEIGHT, AND HAVE AT LEAST AN 18 INCH MINIMUM WIDTH. EACH DRUM SHALL HAVE A MINIMUM OF TWO ORANGE AND TWO WHITE STRIPES. THESE WARNINGS ON DRUMS SHALL BE HORIZONTAL, CIRCUMFERENTIAL, ALTERNATING ORANGE AND WHITE RETROREFLECTIVE STRIPES 4 TO 6 INCHES WIDE.

WZ17. CONTRACTOR SHALL PROVIDE CERTIFIED FLAG PERSONS WITH STOP/SLOW STAFF MOUNTED PADDLE BOARD SIGNS WHEN TRUCKS ENTER AND LEAVE THE SITE.

WZ18. CONSTRUCTION EQUIPMENT SHALL BE REMOVED FROM THE ROADSIDE AREA DURING NON–WORKING HOURS.

WZ19. THE CONTRACTOR SHALL LOCATE LANE CLOSURES TO PROVIDE OPTIMUM VISIBILITY, I.E. BEFORE CURVES AND CRESTS, TO THE EXTENT CONDITIONS PERMIT.

WZ20. THE ENGINEER MAY REQUIRE THAT ALL LANES BE RE–OPENED AT ANY TIME IF THE ROUTE IS NEEDED FOR EMERGENCY PURPOSES. THIS COULD INCLUDE INCIDENTS AT LOCATIONS OUTSIDE THE CONTRACT LIMITS.

WZ21. WHERE POSSIBLE ALL CHANNELIZING AND GUIDING DEVICES ARE TO BE PLACED SO AS TO PROVIDE A MINIMUM 2 FOOT LATERAL CLEARANCE TO THE TRAVELED WAY.

WZ22. UNLESS AUTHORIZED BY THE ENGINEER, THE MINIMUM LANE WIDTHS FOR WORK ZONE TRAVEL LANES SHALL BE 10 FEET.

WZ23. THE CONTRACTOR SHALL PROVIDE A WRITTEN NOTICE TO THE ENGINEER, A MINIMUM OF 21 CALENDAR DAYS IN ADVANCE OF PERFORMING ANY WORK THAT RESULTS IN THE REDUCED WIDTH OF AN EXISTING ROADWAY, SO THAT THE ENGINEER MAY NOTIFY THE REGIONAL PERMIT ENGINEER IN A TIMELY MANNER.

WZ24. BEWARE OF OVERHEAD WIRES.

WZ25. PRIVATE VEHICLES OWNED BY THE CONTRACTOR OR HIS/HER WORKMEN SHALL NOT BE PARKED ON THE PAVEMENT OR SHOULDERS, OR ANY OTHER AREAS DEEMED BY THE SITE ENGINEER AND/OR NYSDOT TO BE HAZARDOUS LOCATIONS.

WZ26. NO MATERIAL SHALL BE PLACED ON THE SHOULDER, OR WITHIN 30 FEET FROM THE EDGE OF PAVEMENT, EXCEPT THAT WHICH IS TO BE PLACED THAT DAY.

WZ27. PROPERTY OWNERS WHOSE DRIVEWAYS WILL BE MADE INACCESSIBLE SHALL BE NOTIFIED BY THE CONTRACTOR AT LEAST 24 HOURS PRIOR TO RESTRICTING USE OF THE DRIVEWAY. FOR MULTIPLE ACCESS PROPERTIES, AT LEAST ONE DRIVEWAY SHALL BE OPEN AT ALL TIMES. ACCESS SHALL BE RESTORED TO ALL DRIVEWAYS AS SOON AS POSSIBLE.

WZ28. SUITABLE RAMPS SHALL BE INSTALLED TO MAINTAIN SMOOTH TRANSITIONS FROM RESIDENTIAL AND COMMERCIAL DRIVEWAYS TO AND FROM THE WORK AREA.

WZ29. WORK ZONE TRAFFIC CONTROL IS THE RESPONSIBILITY OF THE PERMITTEE. ANY SUBCONTRACTORS WORKING FOR THE PERMITTEE MUST HAVE A COPY OF THE HIGHWAY WORK PERMIT ON THE SITE AND MUST BE FAMILIAR WITH THE TRAFFIC CONTROL REQUIREMENTS. IT IS STRONGLY ADVISED THAT A "TAILGATE" SAFETY MEETING WITH EACH WORK CREW BE INITIATED BEFORE THE START OF WORK.

WZ30. TRAFFIC CONTROL SCHEMES MUST BE IN PLACE, AND MAINTAINED, THROUGHOUT THE DURATION OF WORK.

WZ31. ANYONE WORKING WITHIN THE HIGHWAY RIGHT–OF–WAY SHALL WEAR HIGH–VISIBILITY APPAREL MEETING THE ANSI 107–2004 CLASS II STANDARDS AND A HARD HAT.

WZ32. AT THE START OF WORK ON THE PROJECT, ALL WORK ZONE TRAFFIC CONTROL DEVICES SHALL APPEAR IN "ACCEPTABLE" CONDITION. THESE DEVICES SHALL NOT BE ALLOWED TO FALL BELOW THE "MARGINAL" CONDITION AT ANY TIME DURING THE LIFE OF THE PROJECT. FADED AND DETERIORATED PANELS AND NON–STANDARD LEGENDS ARE NOT ACCEPTABLE.

WZ33. FLAGGER SIGNS ARE TO BE USED ONLY WHEN A FLAGGER IS ACTUALLY PRESENT AND VISIBLE TO THE MOTORIST. THEY SHALL BE COVERED OR REMOVED AT ALL OTHER TIMES. STOP/SLOW PADDLES (MINIMUM 24 INCHES IN SIZE) ARE REQUIRED.

WZ34. NO LOW–MOUNTED SIGNS SHALL BE PERMITTED, EXCEPT FOR FLEXIBLE PANELS MEETING THE CURRENT SPECIFICATION REQUIREMENTS.

WZ35. BARRIER VEHICLES SHALL BE REQUIRED AS PER STANDARD SHEET TITLED "WORK ZONE TRAFFIC CONTROL LEGENDS AND NOTES".

WZ36. NO WORK ACTIVITY, EQUIPMENT, VEHICLES AND/OR MATERIALS SHALL BE LOCATED BETWEEN THE BARRIER VEHICLE AND THE ACTIVE WORK AREA (ROLL AHEAD DISTANCE).

WZ37. THE CONTRACTOR MAY BE REQUIRED TO PROVIDE A BARRIER VEHICLE IN CONJUNCTION WITH POLICE PRESENCE IN THE WORK ZONE, TO BE INCLUDED IN THE UNIT BID PRICE FOR BASIC WORK ZONE TRAFFIC CONTROL.

WZ38. THE STATE RESERVES THE RIGHT TO ALLOW WORK WITHIN THE CONTRACT LIMITS BY OTHERS ALONG KEY CORRIDORS. IN ORDER TO MINIMIZE INCONVENIENCE TO THE TRAVELING PUBLIC, ANY LANE CLOSURES REQUIRED WITHIN THE CONTRACT LIMITS MUST BE APPROVED BY THE SURFACE TRANSPORTATION CONTROLLER (STC). KEY CORRIDORS ARE DEFINED AS I–684, TACONIC STATE PARKWAY (TSP), PALISADES INTERSTATE PARKWAY (PIP), SPRAIN BROOK PARKWAY (SBP), SAW MILL RIVER PARKWAY (SMRP), HUTCHINSON RIVER PARKWAY (HRP), CROSS COUNTY PARKWAY (CCP), NYS ROUTE 17 (FUTURE I–86), I–84 (INCLUDING THE NEWBURGH–BEACON BRIDGE), I–87 (INCLUDING THE TAPPAN ZEE BRIDGE), I–287, I–95 AND I90.

THE CONTRACTORS' ATTENTION IS DIRECTED TO THE FACT THEY ARE RESPONSIBLE TO FORWARD REQUESTS THROUGH THE EIC TO THE STC FOR LANE CLOSURE APPROVALS. THESE REQUESTS MUST BE SUBMITTED TO THE STC AT THE EMAIL ADDRESS: STC-R08@DOT.STATE.NY.US; A MINIMUM OF SEVEN (7) DAYS IN ADVANCE OF SCHEDULED CLOSURES. THE STC SHALL RESPOND WITHIN FOUR BUSINESS DAYS OF RECEIPT OF REQUEST. ATTENTION IS ALSO DIRECTED TO THE FACT THAT, DUE TO POSSIBLE TRAFFIC CONTROL CONFLICTS, APPROVAL MAY OR MAY NOT BE GRANTED FOR THE DATE(S) REQUESTED. ANY ADDITIONAL COSTS, DELAYS OR REMOBILIZATIONS ASSOCIATED WITH THE APPROVAL PROCESS SHALL BE INCLUDED IN THE BID PRICE FOR BASIC WORK ZONE TRAFFIC CONTROL.

NYSDOT ADVANCE WARNING SIGNS ARE TO BE PLACED IN THE PUBLIC RIGHT–OF–WAY (NOT AS SHOWN ON THIS DRAWING)

100'

LEGEND

(hatched)	WORK AREA
①	TEMPORARY SIGN LOCATION & DESIGNATION
•	PROPOSED NYSDOT CHANNELIZING DEVICE

NOTES:

1. EXISTING CONDITIONS DEPICTED ON THIS PLAN HAVE BEEN TAKEN FROM SURVEY TITLED, "TOPOGRAPHY OF PROPERTY PREPARED FOR 500 COMMERCE LLC," PREPARED BY TC MERRITS LAND SURVEYORS, DATED 11/10/2017.

WZ39. THE CONTRACTOR'S ATTENTION IS DIRECTED TO THE FACT THAT THE FOLLOWING HOLIDAY WORK RESTRICTIONS ARE APPLICABLE TO THIS PROJECT. DURING THESE HOLIDAY PERIODS, THE CONTRACTOR WILL NOT BE ALLOWED TO PERFORM ANY WORK THAT WILL BE DISRUPTIVE TO TRAFFIC, INCLUDING BUT NOT LIMITED TO LANE CLOSURES. LANE CLOSURES WILL NOT BE PERMITTED DURING THE FOLLOWING STATE RECOGNIZED HOLIDAYS: NEW YEAR'S DAY, MEMORIAL DAY, INDEPENDENCE DAY, LABOR DAY, THANKSGIVING DAY, CHRISTMAS DAY.

IF THE HOLIDAY IS ON A MONDAY, NO LANE CLOSURES WILL BE PERMITTED FROM 12 NOON FRIDAY TO 10 A.M. TUESDAY. IF THE HOLIDAY IS ON A TUESDAY, NO LANE CLOSURES WILL BE PERMITTED FROM 12 NOON FRIDAY TO 10 A.M. WEDNESDAY. IF THE HOLIDAY IS ON A WEDNESDAY, NO LANE CLOSURES WILL BE PERMITTED FROM 12 NOON TUESDAY TO 10 A.M. THURSDAY. IF THE HOLIDAY IS ON A THURSDAY OR FRIDAY, NO LANE CLOSURES WILL BE PERMITTED FROM 12 NOON THE DAY BEFORE THE HOLIDAY TO 10 A.M. MONDAY. IF THE HOLIDAY IS ON A WEEKEND DAY, NO LANE CLOSURES WILL BE PERMITTED FROM 12 NOON FRIDAY TO 10 A.M. MONDAY.

SIGN TABLE

DESIGNATION NUMBER	SIGN	SIZE	DESCRIPTION	MOUNTING TYPE	MOUNTING HEIGHT	REGULATORY	REFLECTORIZED
1	ROAD WORK AHEAD	36"X36"	BLACK ON ORANGE	WINDMASTER	7'–0"	W20–1	X
2	SHOULDER WORK	36"X36"	BLACK ON ORANGE	WINDMASTER	7'–0"	W20–5	X
3	END ROAD WORK	36"X18"	BLACK ON ORANGE	WINDMASTER	7'–0"	G20–2	X

ANY ALTERATION OF PLANS, SPECIFICATIONS, PLATS AND REPORTS BEARING THE SEAL OF A LICENSED PROFESSIONAL ENGINEER OR LICENSED LAND SURVEYOR IS A VIOLATION OF SECTION 7209 OF THE NEW YORK STATE EDUCATION LAW, EXCEPT AS PROVIDED FOR BY SECTION 7209, SUBSECTION 2.

No.	Revision	Date	By
1.	ISSUED FOR BUILDING PERMIT	03/12/2021	JJ

Previous Editions Obsolete

APPLICANT/OWNER:
500 COMMERCE LLC
3 WEST STEVENS AVENUE
HAWTHORNE, NY 10532

ARCHITECT:
DIMOVSKI ARCHITECTURE PLLC
59 KENSICO ROAD
THORNWOOD, NY 10594

JMC Planning, Engineering, Landscape Architecture & Land Surveying, PLLC
JMC Site Development Consultants, LLC
John Meyer Consulting, Inc.
120 BEDFORD ROAD · ARMONK, NY 10504
voice 914.273.5225 · fax 914.273.2102
www.jmcpllc.com

WORK ZONE TRAFFIC CONTROL PLAN

500 COMMERCE STREET REDEVELOPMENT
500 COMMERCE STREET
HAWTHORNE, NY 10532

Drawn: SPG		Approved: MTP	
Scale: 1" = 20'			
Date: 12/15/2020			
Project No: 18158			
18158-HIGHWAY	WZTC	HWY-(_WZTC.scr	
Drawing No: HP–6			

NOT FOR CONSTRUCTION

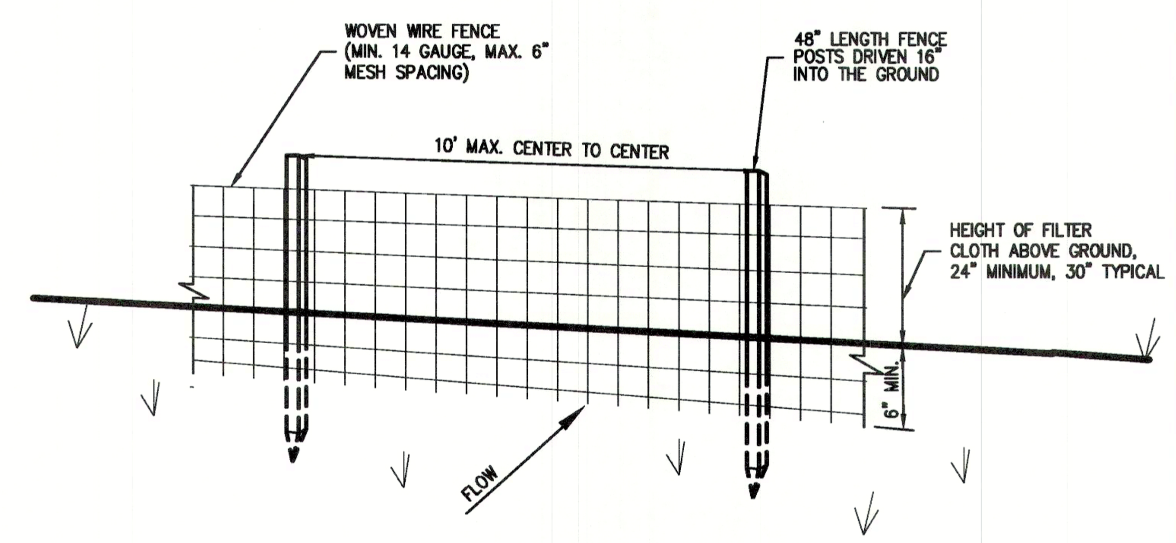

PERSPECTIVE VIEW

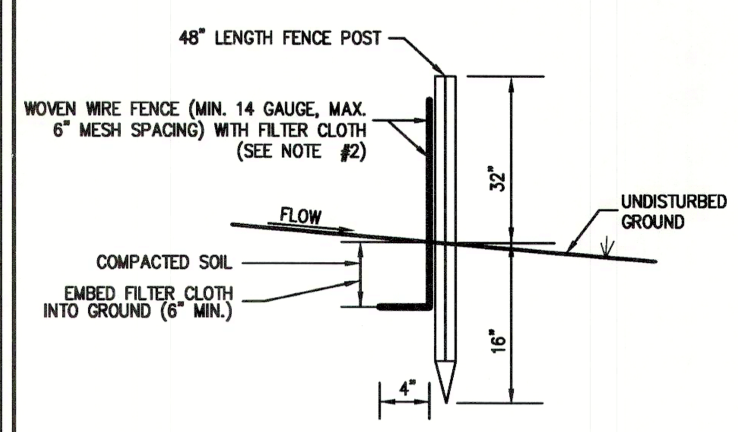

SECTION

SLOPE	STEEPNESS	SLOPE LENGTH/FENCE LENGTH (FT.)
2–10%	50:1 TO 10:1	250/2000
10–20%	10:1 TO 5:1	150/1000
20–33%	5:1 TO 3:1	80/750
33–50%	3:1 TO 2:1	70/350
>50%	>2:1	30/175

*ALL SILT FENCES SHALL BE PLACED AS CLOSE TO THE DISTURBED AREA AS POSSIBLE, BUT AT LEAST 10 FEET FROM THE TOE OF A SLOPE STEEPER THAN 3H:1V, TO ALLOW FOR MAINTENANCE AND ROLL DOWN. THE AREA BEYOND THE FENCE MUST BE UNDISTURBED OR STABILIZED.

NOTES:

1. WOVEN WIRE FENCE SHALL BE FASTENED SECURELY TO FENCE POSTS WITH WIRE TIES OR STAPLES. POSTS SHALL BE STEEL, EITHER T OR U TYPE OR HARDWOOD.
2. FILTER CLOTH SHALL BE FASTENED SECURELY TO WOVEN WIRE FENCE WITH TIES SPACED EVERY 24" AT TOP AND MID SECTION. FENCE SHALL BE WOVEN WIRE, 6" MAXIMUM MESH OPENING.
3. WHEN TWO SECTIONS OF FILTER CLOTH ADJOIN EACH OTHER, THEY SHALL BE OVERLAPPED BY SIX INCHES AND FOLDED. FILTER CLOTH SHALL BE EITHER FILTER X, MIRAFI 100X, STABLINKA T140N, OR APPROVED EQUAL.
4. PREFABRICATED UNITS SHALL BE GEOFAB, ENVIROFENCE, OR APPROVED EQUAL.
5. MAINTENANCE SHALL BE PERFORMED AS NEEDED AND MATERIAL REMOVED AND REPLACED WHEN "BULGES" DEVELOP IN THE SILT FENCE.

SILT FENCE — 1

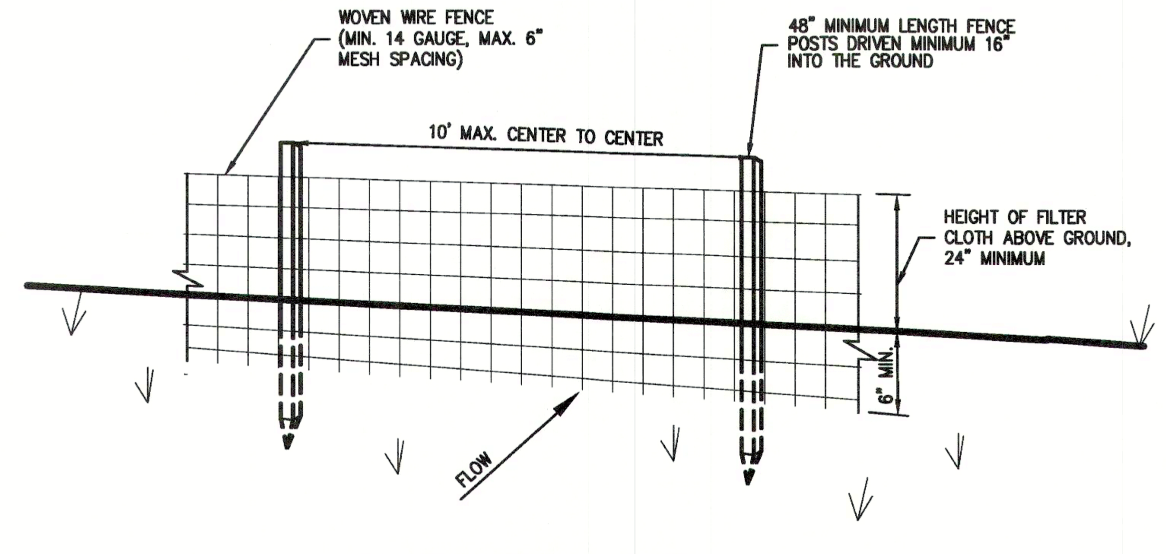

PERSPECTIVE VIEW

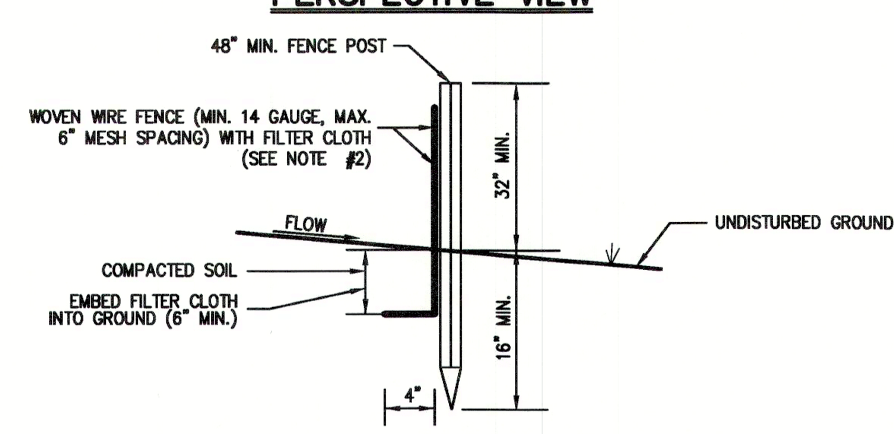

SECTION

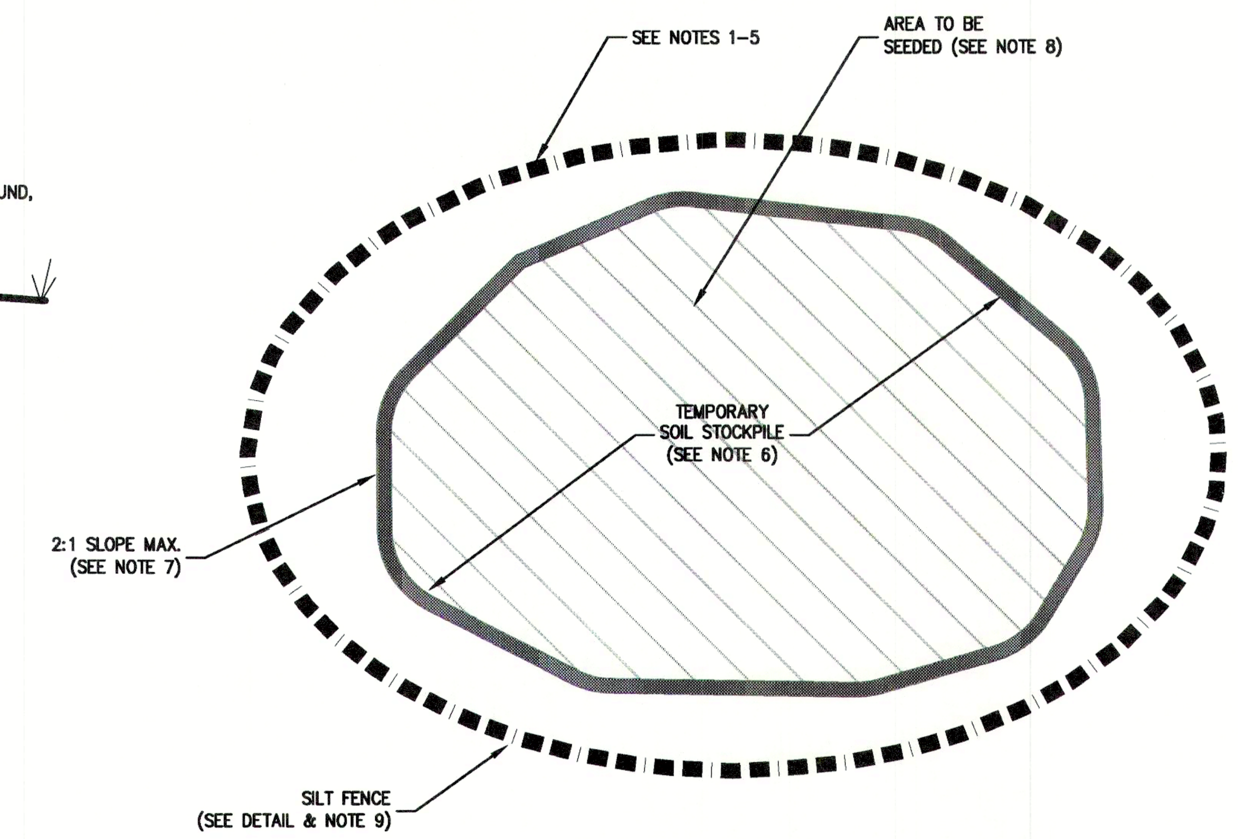

PLAN VIEW

NOTES:

1. WOVEN WIRE FENCE SHALL BE FASTENED SECURELY TO FENCE POSTS WITH WIRE TIES OR STAPLES. POSTS SHALL BE STEEL, EITHER T OR U TYPE OR HARDWOOD.
2. FILTER CLOTH SHALL BE FASTENED SECURELY TO WOVEN WIRE FENCE WITH TIES SPACED EVERY 24" AT TOP AND MID SECTION. FENCE SHALL BE WOVEN WIRE, 6" MAXIMUM MESH OPENING.
3. WHEN TWO SECTIONS OF FILTER CLOTH ADJOIN EACH OTHER, THEY SHALL BE OVERLAPPED BY SIX INCHES AND FOLDED. FILTER CLOTH SHALL BE EITHER FILTER X, MIRAFI 100X, STABLINKA T140N, OR APPROVED EQUAL.
4. PREFABRICATED UNITS SHALL BE GEOFAB, ENVIROFENCE, OR APPROVED EQUAL.
5. MAINTENANCE SHALL BE PERFORMED AS NEEDED AND MATERIAL REMOVED AND REPLACED WHEN "BULGES" DEVELOP IN THE SILT FENCE.
6. THE AREA CHOSEN FOR ALL TEMPORARY SOIL STOCKPILES SHALL BE DRY AND STABLE.
7. ALL STOCKPILED SOIL SHALL NOT CONTAIN SLOPES GREATER THAN 2:1.
8. UPON COMPLETION OF SOIL STOCKPILING, EACH PILE SHALL BE SEEDED WITHIN 24 HOURS. PERENNIAL OR ANNUAL RYEGRASS SHALL BE PLANTED DURING SPRING, SUMMER OR EARLY FALL. WINTER RYE (CEREAL RYE) SHALL BE PLANTED DURING LATE FALL OR EARLY WINTER.
9. ALL STOCKPILES SHALL BE PROTECTED WITH SILT FENCING INSTALLED AROUND THE PERIMETER.

TEMPORARY SOIL STOCKPILE WITH SILT FENCE — 2

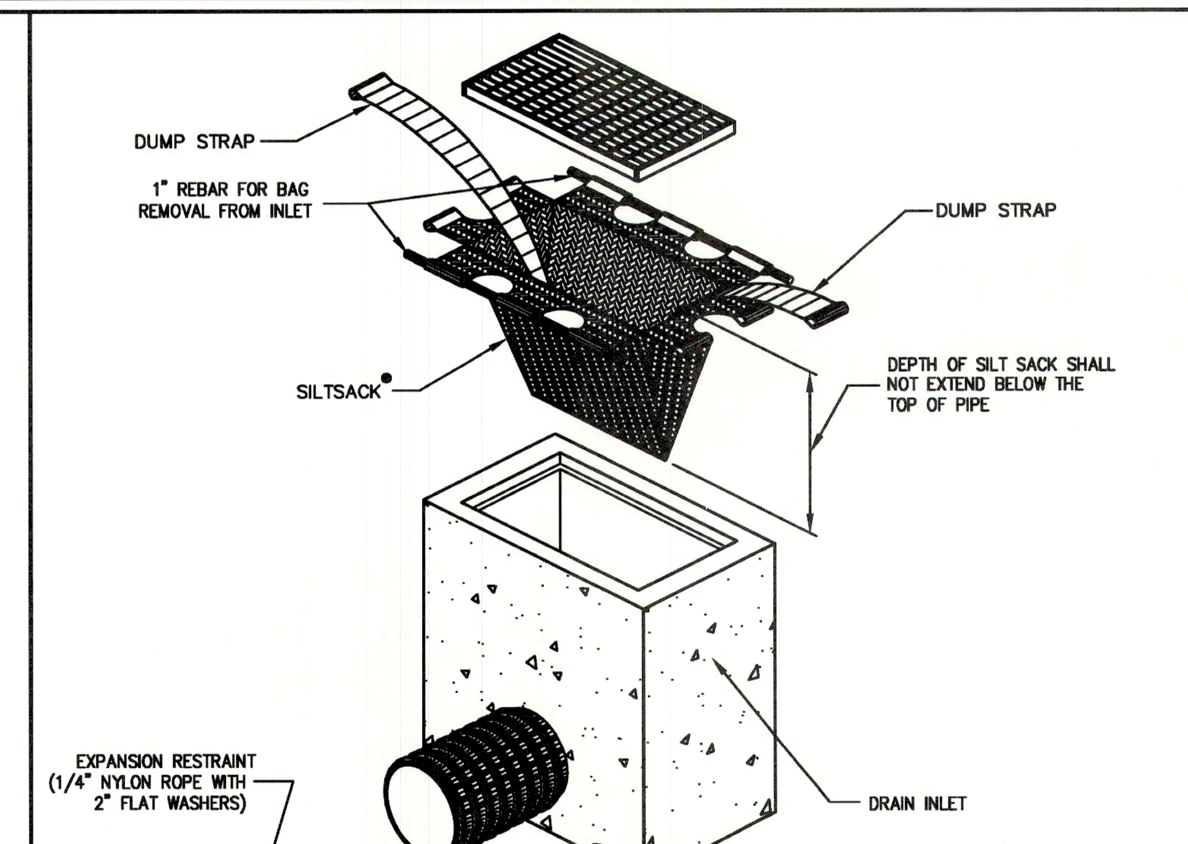

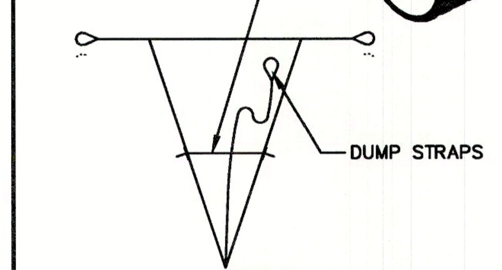

BAG DETAIL

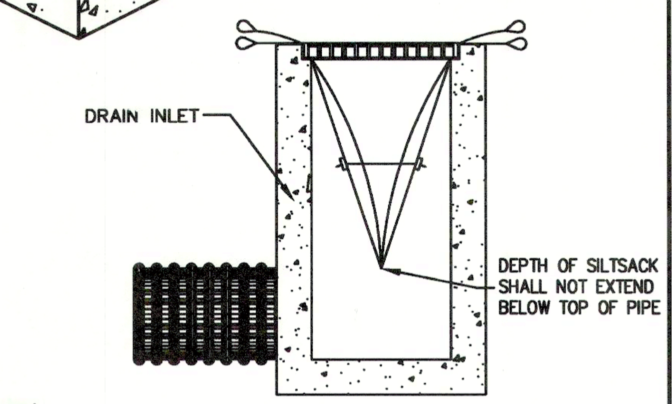

INSTALLATION DETAIL

HI-FLOW SILT SACK AS MANUFACTURED BY ACF ENVIRONMENTAL OR APPROVED EQUAL®

(FOR AREAS OF MODERATE TO HEAVY PRECIPITATION AND RUN-OFF)

PROPERTIES	TEST METHOD	UNITS
GRAB TENSILE STRENGTH	ASTM D-4632	265 LBS
GRAB TENSILE ELONGATION	ASTM D-4632	20 %
PUNCTURE	ASTM D-4833	135 LBS
MULLEN BURST	ASTM D-3786	420 PSI
TRAPEZOID TEAR	ASTM D-4533	45 LBS
UV RESISTANCE	ASTM D-4355	90 %
APPARENT OPENING SIZE	ASTM D-4751	20 US SIEVE
FLOW RATE	ASTM D-4491	200 GAL/MIN/SQ FT
PERMITTIVITY	ASTM D-4491	1.5 SEC -1

NOTE:
CURB INLETS SHALL BE TYPE B WITH CURB DEFLECTOR.

SILT SACK — 3

CROWN/DRIPLINE OR 1 FOOT FOR EVERY INCH OF CALIPER WHICHEVER IS GREATER. (SEE SITE PLAN FOR FENCE ALIGNMENT.)

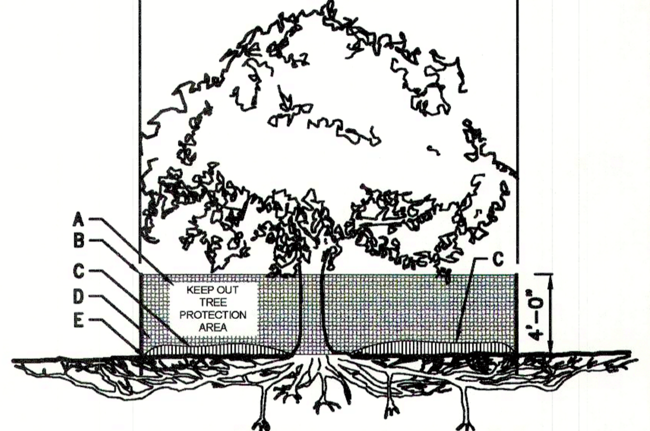

TREE PROTECTION (DRIPLINE FENCE)

A	8.5"X11" SIGN LAMINATED IN PLASTIC SPACED EVERY 50' ALONG FENCE
B	2"X6' STEEL POSTS OR APPROVED EQUAL.
C	5" THICK LAYER OF MULCH.
D	TREE PROTECTION FENCE: HIGH DENSITY POLYETHYLENE FENCING WITH 3.5" X 1.5" OPENINGS; COLOR ORANGE. STEEL POSTS INSTALLED AT 8' O.C.
E	MAINTAIN EXISTING GRADE WITHIN THE TREE PROTECTION FENCE UNLESS OTHERWISE INDICATED ON THE PLANS.
F	INSTALL ROUGH SAWN WOOD WHERE AND AS DIRECTED BY PROJECT LANDSCAPE ARCHITECT OR PROFESSIONAL ARBORIST. SEE CHART FOR WOOD SIZE BOUND WITH 9 GAUGE WIRE.
G	8"-12" THICK LAYER OF MULCH ON MAINTENANCE ROAD. 5" THICK LAYER INSIDE TREE PROTECTION AREA.

TREE DIAMETER	ROUGH SAWN WOOD SIZE
<12"	2"X2"
13"-24"	2"X4"
>25"	2"X6"

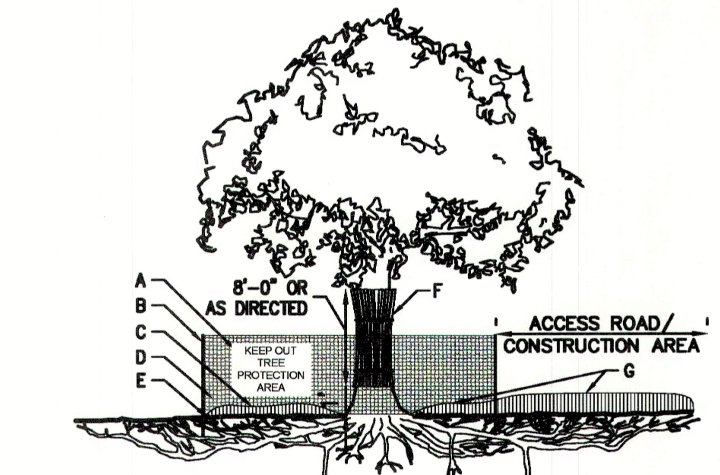

TREE PROTECTION W/ ACCESS ROAD/CONSTRUCTION AREA (DRIPLINE FENCE)

NOTES:

1. SEE SPECIFICATIONS FOR ADDITIONAL TREE PROTECTION REQUIREMENTS.
2. IF THERE IS NO EXISTING IRRIGATION, SEE SPECIFICATIONS FOR WATERING REQUIREMENTS.
3. NO PRUNING SHALL BE PERFORMED EXCEPT BY APPROVED ARBORIST.
4. NO EQUIPMENT SHALL OPERATE INSIDE THE PROTECTIVE FENCING INCLUDING DURING FENCE INSTALLATION AND REMOVAL.
5. SEE SITE PLANS FOR IDENTIFICATIONS/LOCATIONS OF INDIVIDUAL TREES TO BE PROTECTED.
6. ALL EXCAVATION WITHIN THE CROWN/DRIPLINE OF ANY TREE SHALL BE PERFORMED UNDER THE DIRECT SUPERVISION OF THE PROJECT LANDSCAPE ARCHITECT OR PROFESSIONAL ARBORIST. SPECIAL MEASURES, SUCH AS THE USE OF AN AIR SPADE MAY BE REQUIRED.
7. THE CONTRACTOR MAY PROPOSE THE USE OF ENGINEERED MATTING OR OTHER ENGINEERED PRODUCTS IN LIEU OF MULCH, WHICH SHALL BE SUBJECT TO THE REVIEW AND APPROVAL OF ALL AUTHORITIES HAVING JURISDICTION.

TREE PROTECTION — 4

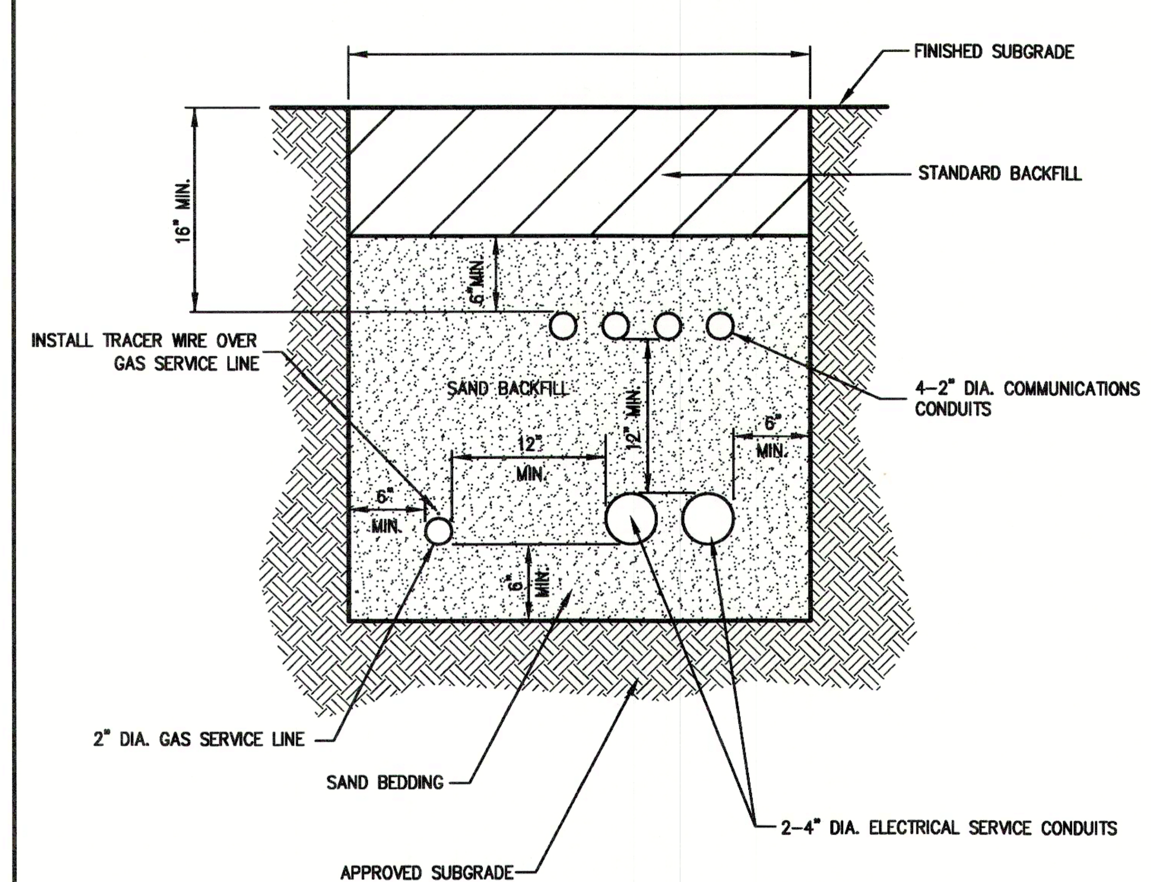

IN FIELD USING CLASS A (4000 PSI)

NOTES:

1. UTILITIES TO BE INSTALLED IN ACCORDANCE WITH THE REGULATIONS AND REQUIREMENTS OF THE UTILITY COMPANY HAVING JURISDICTION.
2. BACKFILL FOR PIPE AND CONDUIT SHALL BE PLACED EVENLY AND CAREFULLY AROUND AND OVER THE PIPE OR CONDUIT IN SIX (6) INCH MAXIMUM LAYERS. EACH LAYER SHALL BE THOROUGHLY AND CAREFULLY COMPACTED UNTIL TWELVE (12) INCHES OF COVER EXISTS OVER THE PIPE OR CONDUIT. THE REMAINDER OF THE BACKFILL MAY THEN BE PLACED AND COMPACTED IN A MAXIMUM OF TWELVE (12) INCH LAYERS. EACH LAYER SHALL BE COMPACTED BY APPROVED MECHANICAL TAMPING MACHINES. UNLESS OTHERWISE SPECIFIED BACKFILL SHALL BE COMPACTED TO NOT LESS THAN 92% MAXIMUM MODIFIED DENSITY IN ACCORDANCE WITH ASTM DESIGNATION D-1557 IN THE MANNER HEREIN DESCRIBED. BACKFILL SHALL PROCEED UP TO THE LINES AND GRADES AS SHOWN ON THE DRAWINGS.
3. CONTRACTOR SHALL STAKE THE PROPOSED SERVICE LINES AND CONDUITS PRIOR TO BACKFILLING TO ENSURE SERVICES DO NOT MOVE WITHIN TRENCH.

UTILITY TRENCH DETAIL — 5

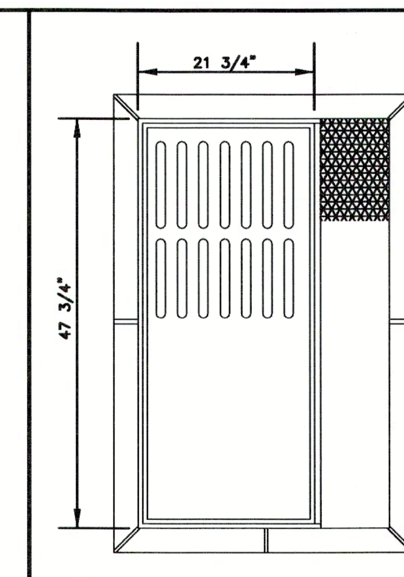

NOTE:
Highway Catch Basin Head Curb Type "StreamFlow Grating" Campell Foundary No.2617 or equal.

DETAIL OF CATCH BASIN HEAD CURB TYPE A
N.T.S.

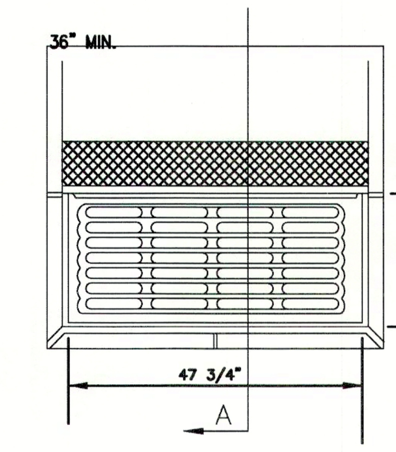

PLAN

NOTE:
"Storm Flow Grating" Curb Type Catch Basin in Frame and Grate Campbell Foundry No. 2541 or equal.

PLAN

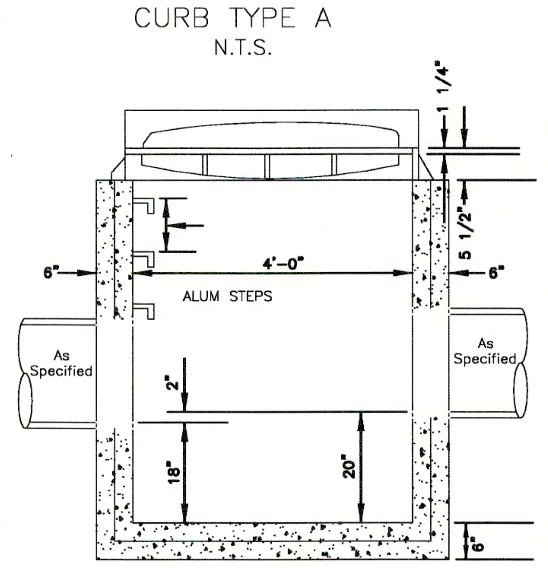

FRONT VIEW

DETAIL OF PRECAST CONCRETE CATCH BASIN TYPE A
N.T.S.

NOTE:
Type A Catch Basin as shown here on will be utilized where the need for a Drop inlet exists. The curb type casting shall be substituted with Campbell Foundary Frame and Grate No.3408 or equal.

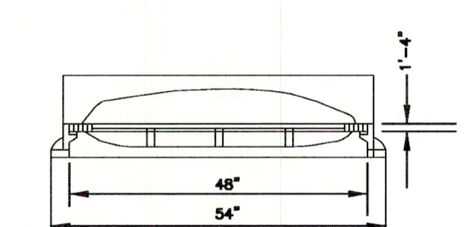

ELEVATION

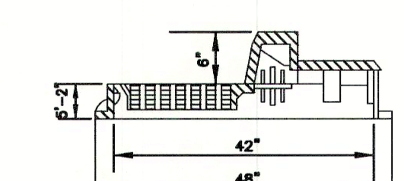

SECTION A–A

DRAIN INLET (TYPE CI) — 6

(TOWN OF MOUNT PLEASANT)

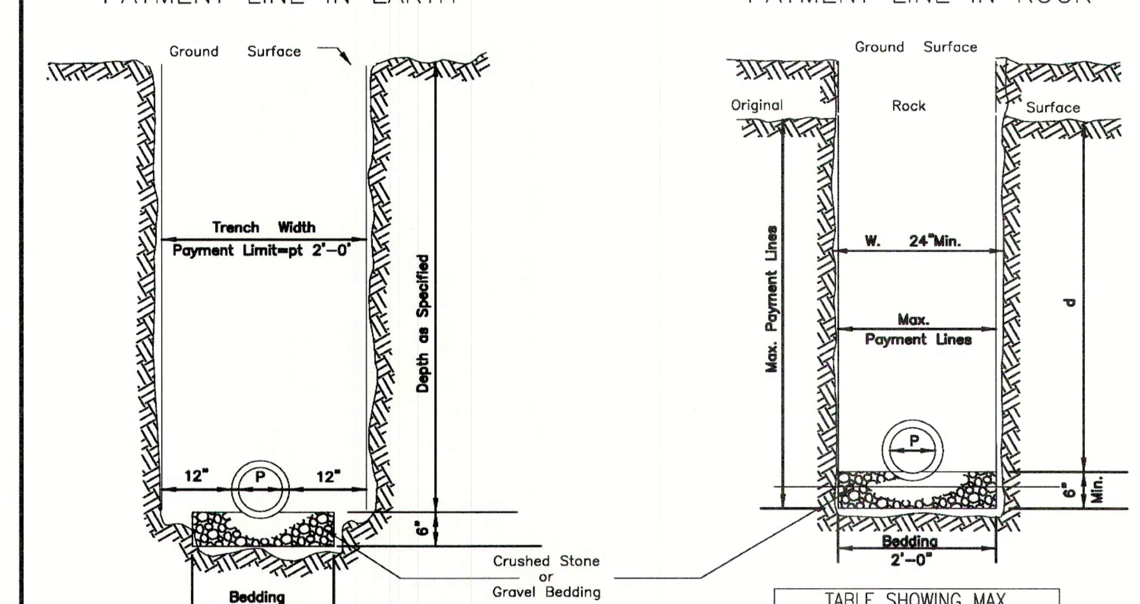

NOTE:
Crushed Stone or Gravel Bedding as required will be paid for separately under the appropriate item.
Payment limit lines for excavation in earth or rock for Manholes, Catchbasins and other structures shall be six (6) inches beyond the next lines of the structure.

DETAIL OF TYPICAL TRENCH SECTIONS
N.T.S.

TABLE SHOWING MAX. PAYMENT LINE FOR ROCK EXC.

Depth to F.L. "d"ft.	Allowable Width "W"
0' to 8'	P + 16"
8' to 12'	P + 22"
12' to 16'	P + 28"
16' to 20'	P + 34"
over 20'	P + 40"

UTILITY TRENCH DETAIL — 7

(TOWN OF MOUNT PLEASANT)

No.	Revision	Date
1.	ISSUED FOR BUILDING PERMIT	03/12/2021

Previous Editions Obsolete

JMC Planning, Engineering, Landscape Architecture & Land Surveying, PLLC
JMC Site Development Consultants, LLC
John Meyer Consulting, Inc.
120 BEDFORD ROAD • ARMONK, NY 10504
voice 914.273.5225 • fax 914.273.2102
www.jmcpllc.com

JMC

CONSTRUCTION DETAILS

500 COMMERCE STREET REDEVELOPMENT
500 COMMERCE STREET
HAWTHORNE, NY 10532

ANY ALTERATION OF PLANS, SPECIFICATIONS, PLATS AND REPORTS BEARING THE SEAL OF A LICENSED PROFESSIONAL ENGINEER OR LICENSED LAND SURVEYOR IS A VIOLATION OF SECTION 7209 OF THE NEW YORK STATE EDUCATION LAW, EXCEPT AS PROVIDED FOR BY SECTION 7209, SUBSECTION 2.

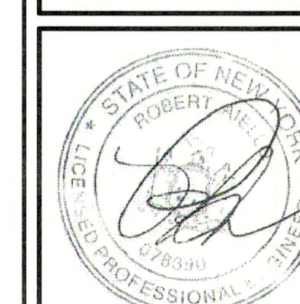

Drawn: SPG	Approved: MTP
Scale:	NOT TO SCALE
Date:	12/15/2020
Project No:	18158
18158-DETAILS	HP-7
Drawing No:	HP-7

COPYRIGHT © 2021 by JMC All Rights Reserved. No part of this document may be reproduced, stored in a retrieval system, or transmitted in any form or by means, electronic, mechanical, photocopying, recording or otherwise, without the prior written permission of JMC PLANNING, ENGINEERING, LANDSCAPE ARCHITECTURE & LAND SURVEYING, PLLC | JMC SITE DEVELOPMENT CONSULTANTS, LLC | JOHN MEYER CONSULTING, INC. (JMC). Any modifications or alterations to this document without the written permission of JMC shall render them invalid and unusable.

NOT FOR CONSTRUCTION

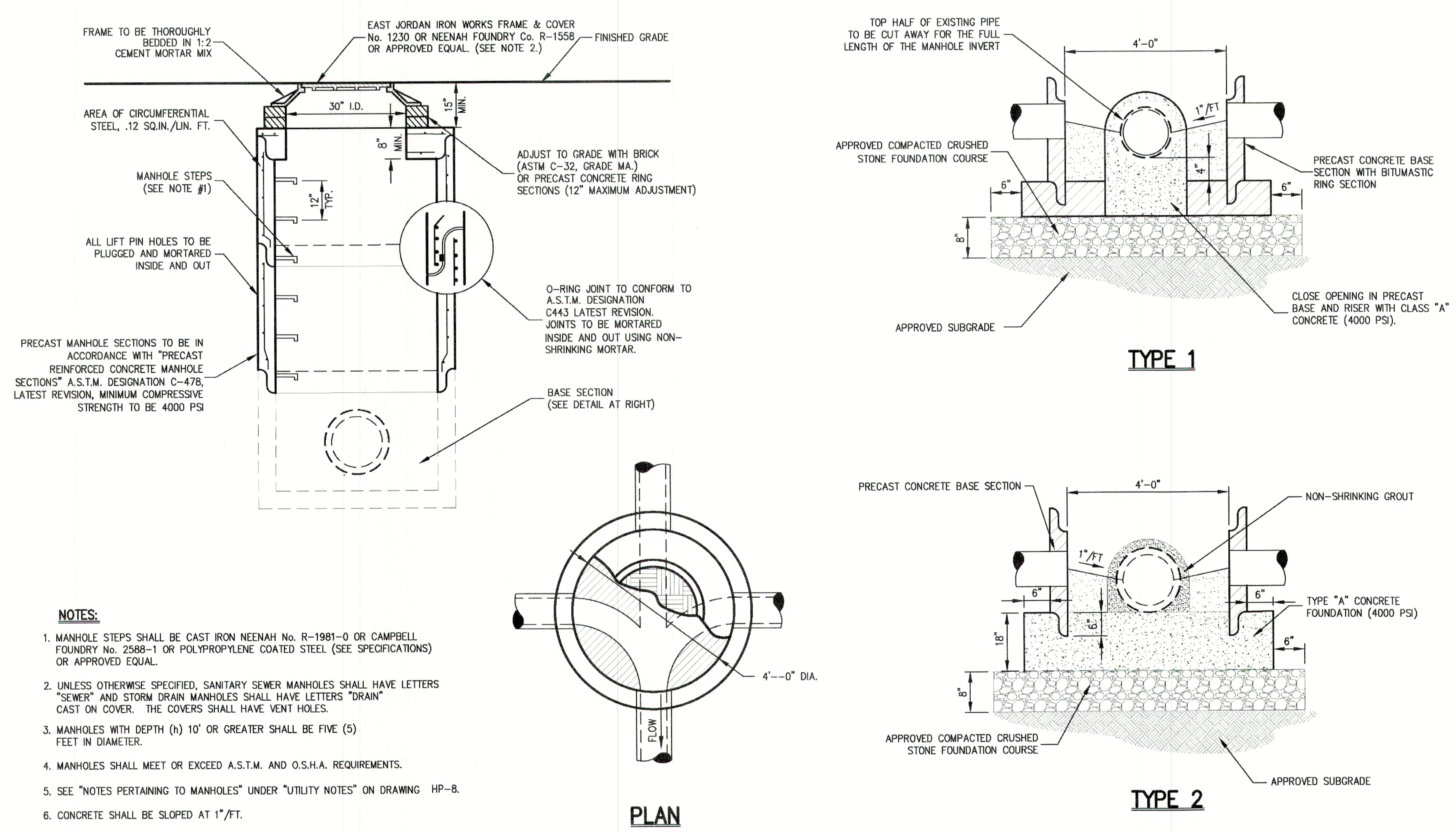

NOTES:

1. MANHOLE STEPS SHALL BE CAST IRON NEENAH No. R-1981-0 OR CAMPBELL FOUNDRY No. 2588-1 OR POLYPROPYLENE COATED STEEL (SEE SPECIFICATIONS) OR APPROVED EQUAL.
2. UNLESS OTHERWISE SPECIFIED, SANITARY SEWER MANHOLES SHALL HAVE LETTERS "SEWER" AND STORM DRAIN MANHOLES SHALL HAVE LETTERS "DRAIN" CAST ON COVER. THE COVERS SHALL HAVE VENT HOLES.
3. MANHOLES WITH DEPTH (h) 10' OR GREATER SHALL BE FIVE (5) FEET IN DIAMETER.
4. MANHOLES SHALL MEET OR EXCEED A.S.T.M. AND O.S.H.A. REQUIREMENTS.
5. SEE "NOTES PERTAINING TO MANHOLES" UNDER "UTILITY NOTES" ON DRAWING HP-8.
6. CONCRETE SHALL BE SLOPED AT 1"/FT.

DOGHOUSE MANHOLE — 8

NOTES PERTAINING TO DRAIN INLETS

A-1 STEPS WILL NOT BE REQUIRED IN INLETS LESS THAN FOUR (4) FEET IN DEPTH. STEPS WILL BE REQUIRED IN INLETS FOUR (4) FEET OR GREATER IN DEPTH. DEPTHS FOR DRAIN INLETS SHALL BE MEASURED FROM FINISHED GRADE TO INSIDE BOTTOM OF STRUCTURE (INCLUDING SUMP AS APPLICABLE).

A-2 WHEN STEPS ARE REQUIRED, STEPS SHALL COMPLY WITH THE SAME REQUIREMENTS OF ASTM STANDARD C-478, ARTICLE 13 ENTITLED "MANHOLE STEPS & LADDERS".

A-3 FOR MASONRY STRUCTURES, THE FIRST COURSE OF MASONRY SHALL BE SET IN THE CONCRETE FOUNDATION BEFORE THE CONCRETE HAS SET. CONCRETE FOUNDATION SHALL BE CLASS "A"(4000 psi) CONCRETE, TWELVE (12) INCHES THICK AND SHALL EXTEND SIX (6) INCHES BEYOND THE OUTSIDE FACE THE STRUCTURE.

A-4 IT SHALL BE THE CONTRACTOR'S RESPONSIBILITY TO FURNISH AND CONSTRUCT THE PROPER SIZE STRUCTURE INCLUDING THE NECESSARY OPENINGS TO ACCOMMODATE THE WORK AS SHOWN ON THE PLANS OR ORDERED BY THE ENGINEER, AT NO ADDITIONAL COST TO THE OWNER.

A-5 ALL NECESSARY PATCHING FOR DRAIN STRUCTURES SHALL BE ACCOMPLISHED WITH NON-SHRINKING CEMENT MORTAR GROUT, APPROVED EQUAL TO SIKA-SET AS MANUFACTURED BY THE SIKA CHEMICAL CORP.

A-6 FOUNDATIONS FOR PRECAST CONCRETE STRUCTURES SHALL BE SET ON A COMPACTED LAYER OF APPROVED CRUSHED STONE HAVING A MINIMUM COMPACTED THICKNESS OF EIGHT (8) INCHES.

A-7 ALL PIPES SHALL BE CUT FLUSH WITH THE INSIDE WALL OF THE STRUCTURE.

A-8 PROVIDE REINFORCED CONCRETE TOP SLAB FOR OVERSIZED DRAIN INLETS WITH PROPER SIZE OPENING TO ACCOMMODATE INSTALLATION OF FRAME & GRATE.

A-9 FOR MASONRY STRUCTURES GREATER THAN TEN (10) FEET IN DEPTH, THICKNESS OF MASONRY WALLS SHALL BE INCREASED TO TWELVE (12) INCHES.

A-10 FOR ALL STRUCTURES GREATER THAN 10 FEET IN DEPTH, STRUCTURES SHALL PROVIDE MINIMUM INSIDE DIMENSIONS OF 4 FEET X 4 FEET.

NOTES PERTAINING TO MANHOLES

B-1 PRECAST CONCRETE MANHOLES SHALL COMPLY WITH ASTM STANDARD C-478. MANHOLE JOINTS SHALL COMPLY WITH ASTM STANDARD C-443.

B-2 FOR PRECAST CONCRETE MANHOLES FIVE (5) FEET OR LESS IN HEIGHT, TOP CONE SECTION SHALL BE REPLACED WITH PRECAST REINFORCED CONCRETE SLAB (6" MIN. THICKNESS) WITH OPENING OF SUFFICIENT SIZE TO ACCOMMODATE MANHOLE CASTING.

B-3 FOR MANHOLES 10 FEET OR MORE IN DEPTH, MANHOLE DIAMETER SHALL BE FIVE (5) FEET.

B-4 TERMINAL MANHOLE FLOORS SHALL BE SLOPED TOWARD OUTFALL PIPE.

B-5 INVERT CHANNELS FOR PRECAST CONCRETE MANHOLES SHALL BE CONSTRUCTED OF CONCRETE.

B-6 NOTES A-1, A-2, A-4, A-5, A-6 & A-7 UNDER "NOTES PERTAINING TO DRAIN INLETS" ABOVE SHALL APPLY TO MANHOLES.

NOTES PERTAINING TO PRECAST CONCRETE STRUCTURES FOR STORM DRAINS, SANITARY SEWERS AND WATER LINES

C-1 ALL PRECAST CONCRETE STRUCTURES SHALL BE DESIGNED TO ACCOMMODATE AN H-20 DESIGN LOAD.

C-2 STEPS SHALL BE LOCATED WITHIN STRUCTURE TO AVOID PLACEMENT OVER PIPES WHEN PRACTICABLE.

UTILITY NOTES — 9

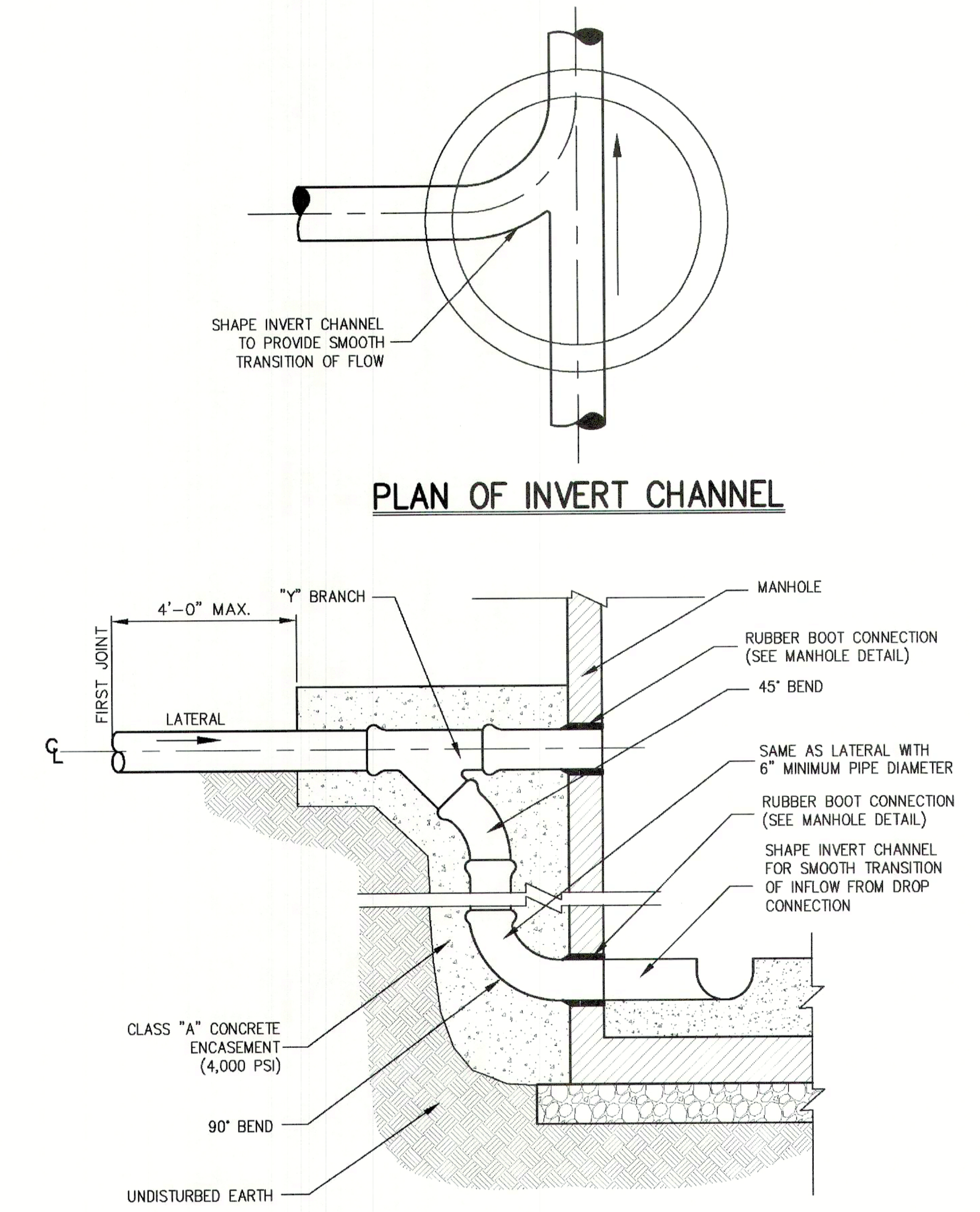

NOTES:

1. DROP CONNECTION SHALL BE USED WHEN INCOMING SANITARY SEWER IS MORE THAN 2'-0" HIGHER THAN THE OUTGOING SEWER.
2. PIPE SIZE OF DROP CONNECTION SHALL BE THE SAME SIZE AS LATERAL WITH 6" MINIMUM DIAMETER.

DROP CONNECTION AT MANHOLE — 10
(SANITARY SEWER)

Note:
1. Concrete Shall Be N.Y.S.D.O.T. Specs Class "A" Concrete.
2. Drop Curbs For Driveways Shall Have 1 1/2" Reveal.

DETAIL OF CONCRETE CURB
Scale:1"=1'-0"

CONCRETE CURB — 11
(TOWN OF MOUNT PLEASANT)

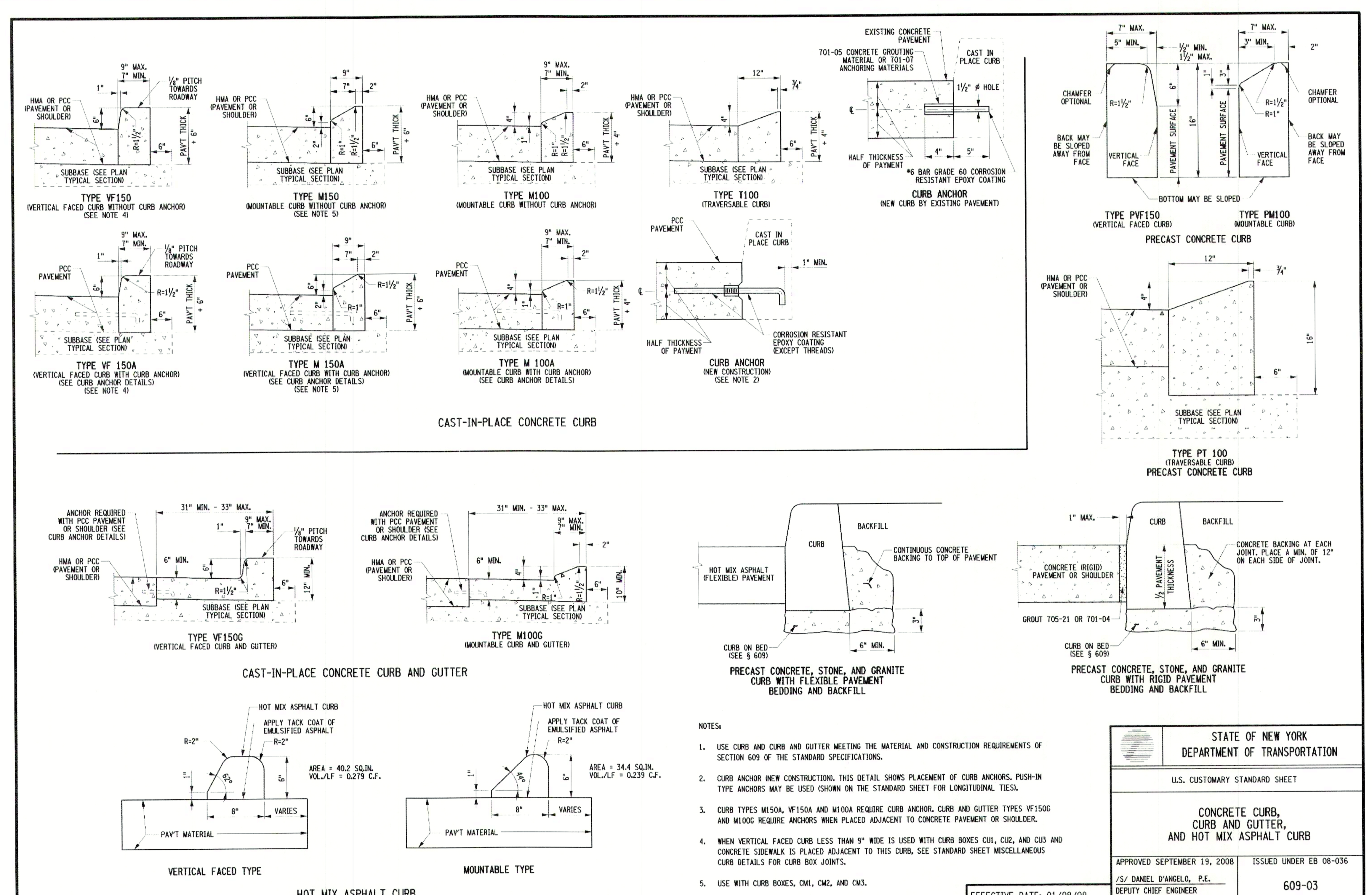

CONCRETE CURB, CURB AND GUTTER, AND HOT MIX ASPHALT CURB — 12

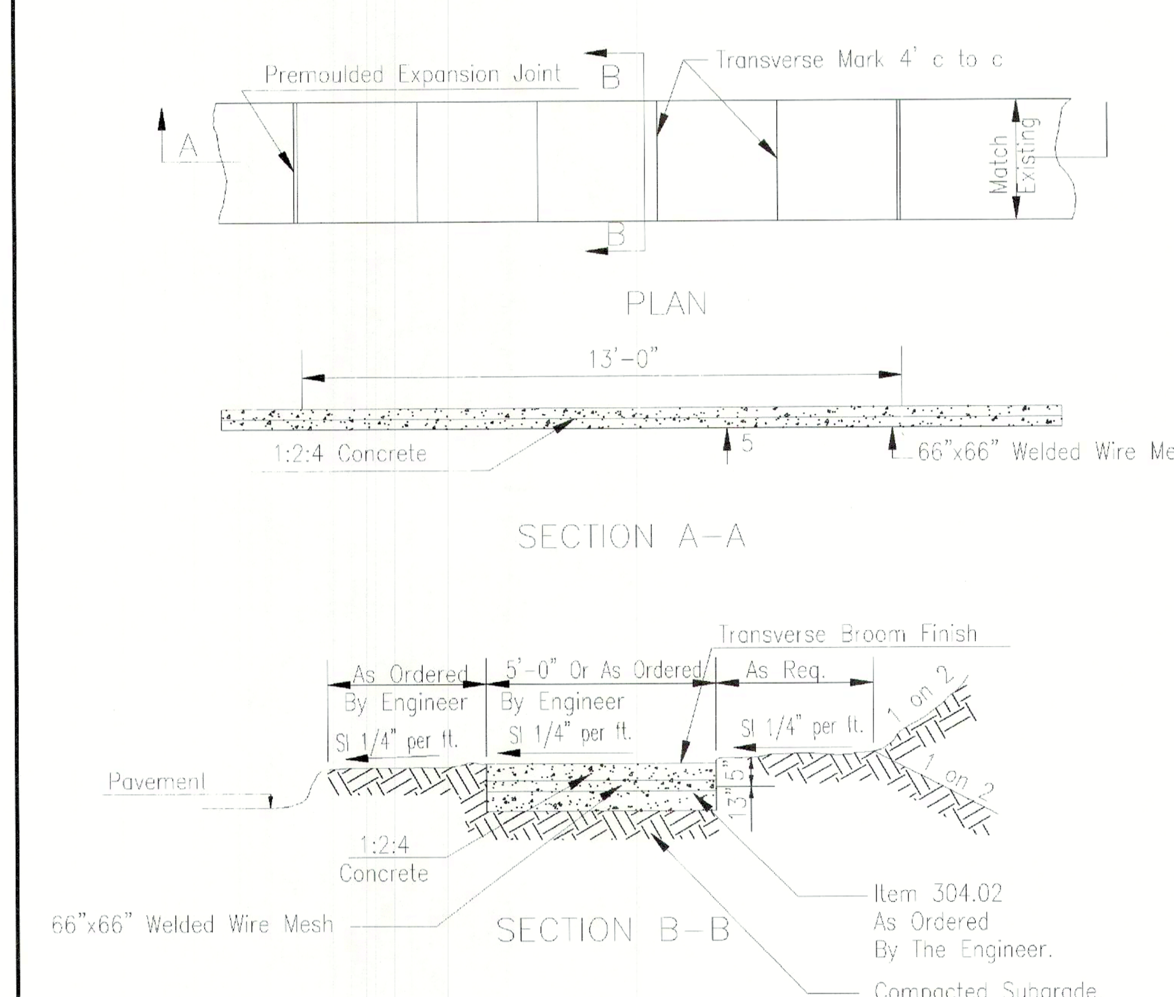

Notes:
1. Concrete shall be NYSDOT Specs Class A Concrete.
2. Sidewalks Shall Be 5 inches Thick On a 3 inch Base of NYSDOT Item 304.02, With 66"x66" Welded Wire Mesh.
3. Driveways and Aprons Shall Be 7 inches Thick, on inch Base of NYSDOT item 304.02, With 66"x66" Welded Wire Mesh.

DETAIL OF CONCRETE SIDEWALK
Scale:1/4"=1'-0"

CONCRETE SIDEWALK — 13
(TOWN OF MOUNT PLEASANT)

No.	Revision	Date
1.	ISSUED FOR BUILDING PERMIT	03/12/2021

Previous Editions Obsolete

JMC Planning, Engineering, Landscape Architecture & Land Surveying, PLLC
JMC Site Development Consultants, LLC
John Meyer Consulting, Inc.
120 BEDFORD ROAD · ARMONK, NY 10504
voice 914.273.5225 · fax 914.273.2102
www.jmcpllc.com

CONSTRUCTION DETAILS

500 COMMERCE STREET REDEVELOPMENT
500 COMMERCE STREET
HAWTHORNE, NY 10532

ANY ALTERATION OF PLANS, SPECIFICATIONS, PLATS AND REPORTS BEARING THE SEAL OF A LICENSED PROFESSIONAL ENGINEER OR LICENSED LAND SURVEYOR IS A VIOLATION OF SECTION 7209 OF THE NEW YORK STATE EDUCATION LAW, EXCEPT AS PROVIDED FOR BY SECTION 7209, SUBSECTION 2.

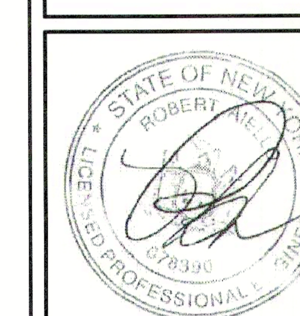

Drawn:	SPG	Approved:	MTP
Scale:	NOT TO SCALE		
Date:	12/15/2020		
Project No:	18158		
18158-DETAILS	HP-8	-	
Drawing No:	HP-8		

NOT FOR CONSTRUCTION

GENERAL NOTES:

1. THESE SHEETS ARE IN ACCORDANCE WITH THE AMERICANS WITH DISABILITIES ACT (ADA), AND THE REQUIREMENTS OF THE 2011 PROPOSED ACCESSIBILITY GUIDELINES FOR PEDESTRIAN FACILITIES IN THE PUBLIC RIGHT OF WAY (PROWAG).
2. DIMENSIONS SHOWN IN THE DETAILS AS MINIMUMS AND MAXIMUMS ARE THE LIMITS FOR DESIGN AND FIELD LAYOUT. FACILITIES SHALL NOT BE CONSTRUCTED WITH VALUES OUTSIDE THE LIMITS FOR WORK ACCEPTANCE. SEE TABLE "DESIGN ELEMENT TOLERANCES" ON THIS SHEET. FURTHER INFORMATION IS PROVIDED ON "CRITICAL ELEMENTS FOR THE DESIGN, LAYOUT, AND ACCEPTANCE OF PEDESTRIAN FACILITIES" AVAILABLE ON THE NYSDOT HIGHWAY DESIGN MANUAL CHAPTER 18 WEBSITE.
3. NOT ALL FACILITIES CAN BE CONSTRUCTED TO MEET THE DESIGN STANDARDS. FACILITIES THAT CANNOT BE CONSTRUCTED TO MEET THE DESIGN STANDARDS SHALL BE CONSTRUCTED TO MEET THE STANDARDS TO THE GREATEST EXTENT PRACTICABLE. NONSTANDARD FEATURES SHALL BE JUSTIFIED PER HIGHWAY DESIGN MANUAL CHAPTER 2, EXHIBIT 2-15A.
4. TO CHECK FIELD LAYOUT AND TO VERIFY WORK ACCEPTANCE, ALL SLOPES AND GRADES WILL BE MEASURED WITH A 4 FOOT LONG DIGITAL LEVEL, USING AT LEAST TWO READINGS. WHERE THE READINGS VARY, THE MEASUREMENTS WILL BE AVERAGED. GRADE (RUNNING SLOPE) WILL BE MEASURED ALONG THE CENTERLINE AND AT OFFSET 10 FT FROM THE CENTERLINE. CROSS SLOPES WILL BE MEASURED PERPENDICULAR TO CENTERLINE AT 5' TO 10' INTERVALS.
5. GRADES (RUNNING SLOPES) ARE MEASURED IN THE DIRECTION OF PEDESTRIAN TRAVEL. CROSS SLOPES ARE MEASURED PERPENDICULAR TO THE DIRECTION OF PEDESTRIAN TRAVEL.
6. JOINTS BETWEEN SIDEWALKS, CURB RAMPS, TURNING SPACES AND ROADWAYS SHALL BE FLUSH AND FREE FROM ABRUPT VERTICAL CHANGES GREATER THAN ¼". VERTICAL SURFACE DISCONTINUITIES BETWEEN ¼" AND ½" SHALL BE BEVELED WITH A SLOPE NOT STEEPER THAN 2:1. BEVEL SHALL BE APPLIED ACROSS THE ENTIRE JOINT. SEE DETAIL ON SHEET 12 OF 9.
7. SIDEWALKS ARE CONNECTED TO ROADWAYS BY EITHER BLENDED TRANSITIONS OR CURB RAMPS. BLENDED TRANSITIONS ARE CONNECTIONS BETWEEN THE SIDEWALK LEVEL AND THE ROADWAY LEVEL THAT HAVE A MAXIMUM GRADE (RUNNING SLOPE) OF 5%, AND TRANSITIONS GREATER THAN 5% ARE CONSIDERED CURB RAMPS.
8. CURB RAMPS AND BLENDED TRANSITIONS MAY REQUIRE THE INSTALLATION OF DETECTABLE WARNINGS. SEE ADDITIONAL "DETECTABLE WARNING NOTES" ON THIS SHEET, AND DETAILS ON SHEET 2 OF 9 FOR DIMENSIONS, ORIENTATION AND INSTALLATION.
9. VERTICAL ALIGNMENT SHALL BE GENERALLY PLANAR. GRADE BREAKS WITHIN THE PEDESTRIAN ACCESS ROUTE SHALL BE PERPENDICULAR TO THE DIRECTION OF TRAVEL AND SHALL NOT BE ROUNDED.
10. MATERIAL DEPTHS SHOWN ON THESE SHEETS ARE TYPICAL MINIMUM VALUES AND MAY BE DIFFERENT IN THE CONTRACT DOCUMENTS.
11. SIDEWALK GRADE (RUNNING SLOPE) SHALL NOT BE DESIGNED TO EXCEED 4.5%, EXCEPT WHEN MATCHING INTO EXISTING SIDEWALK OR WHEN THE HIGHWAY GRADE IS STEEPER, WHEN HIGHWAY GRADE IS GREATER THAN 5%, THE SIDEWALK GRADE SHALL NOT EXCEED THE HIGHWAY GRADE.
12. THE CROSS SLOPE OF PEDESTRIAN ACCESS ROUTES SHALL BE 1.5% MAXIMUM FOR DESIGN AND LAYOUT, AND 2% MAXIMUM FOR WORK ACCEPTANCE. THE FOLLOWING EXCEPTIONS ARE ALLOWED:
    A. WHERE PEDESTRIAN STREET CROSSINGS ARE PROVIDED AT INTERSECTIONS WITHOUT YIELD OR STOP CONTROL, OR WHERE THERE IS ANY TRAFFIC SIGNAL WITHOUT A FLASHING RED, THE CROSS SLOPE OF A PEDESTRIAN ACCESS ROUTE CONTAINED WITHIN A STREET CROSSING SHALL BE 4.5% MAXIMUM FOR DESIGN AND LAYOUT, AND 5% MAXIMUM FOR WORK ACCEPTANCE.
    B. WHERE MIDBLOCK PEDESTRIAN STREET CROSSINGS ARE PROVIDED, THE CROSS SLOPE OF A PEDESTRIAN ACCESS ROUTE CONTAINED WITHIN A MIDBLOCK STREET CROSSING SHALL BE PERMITTED TO EQUAL THE STREET OR HIGHWAY GRADE.
13. THE MINIMUM CLEAR WIDTH FOR PEDESTRIAN ACCESS ROUTES IS 4'-0", EXCLUSIVE OF THE CURB. WHEN WALKWAY WIDTHS ARE LESS THAN 5'-0", 5'-0" x 5'-0" PASSING SPACES (SHOWN IN DETAIL A OR B), OR A FEATURE OF EQUAL OR GREATER DIMENSIONS (E.G., DRIVEWAYS THAT MEET THE SLOPE CRITERIA), SHALL BE PROVIDED AT A MAXIMUM INTERVAL OF 200'. EXISTING DRIVEWAYS AND STREET CROSSING MAY ALSO SERVE AS PASSING SPACES.
14. THE BUFFER ZONE IS A PHYSICAL DISTANCE SEPARATING THE PEDESTRIAN ACCESS ROUTE FROM THE VEHICLE TRAVELED WAY. THE BUFFER ZONE MAY BE PLANTED OR PAVED. WHERE THE BUFFER ZONE WIDTH, EXCLUSIVE OF CURB, IS LESS THAN 3'-0" THE SURFACE SHOULD BE PAVED OR CONSTRUCTED WITH HARDSCAPE MATERIALS.
15. THE MAXIMUM RECOMMENDED CROSS SLOPE OF A TURF BUFFER ZONE OR SLOPE TRANSITION BEHIND SIDEWALK IS 25%. BUFFER ZONES WITH A CROSS SLOPE GREATER THAN 25% SHOULD BE PAVED, PLANTED OR CONSTRUCTED WITH HARDSCAPE MATERIALS.
16. WHEN CROSSING DRIVEWAYS, THE WORK SHALL BE IN CONFORMANCE WITH STANDARD SHEET 608-03.
17. FOR PEDESTRIAN SIGNALS AND PEDESTRIAN PUSH BUTTONS, REFER TO STANDARD SHEET 680-10 FOR DETAILS.
18. WHERE EXISTING ROADWAYS ARE SAWCUT TO INSTALL CURBING AND/OR SIDEWALK, THE ROADWAY SHOULD BE SAWCUT AT LEAST 2'-0" FROM THE PROPOSED CURB LINE TO ALLOW FOR ADEQUATE COMPACTION OF ASPHALT. IF SAWCUT IS LESS THAN 2'-0" FROM PROPOSED CURB LINE, THEN THE ROADWAY SHALL BE REBUILT USING CLASS C CONCRETE. SEE DETAILS ON SHEET 9 OF 9.

CURB RAMP NOTES:

19. THE MINIMUM WIDTH OF A CURB RAMP SHALL BE 4'-0".
20. THE GRADE (RUNNING SLOPE) OF A CURB RAMP SHALL BE A MINIMUM OF 5%. THE GRADE FOR DESIGN AND LAYOUT SHALL BE A MAXIMUM OF 7.5%. THE GRADE FOR ADA ACCESSIBILITY AND WORK ACCEPTANCE SHALL BE A MAXIMUM OF 8.3%.
21. WHERE EXISTING CONDITIONS DO NOT ALLOW THE CONSTRUCTION OF A CURB RAMP WITH A GRADE (RUNNING SLOPE) OF 8.3% OR LESS, THE RAMP LENGTH SHALL NOT BE REQUIRED TO EXCEED 15'-1" FOR DESIGN AND FIELD LAYOUT. THE RAMP LENGTH SHALL NOT BE REQUIRED TO EXCEED 15'-0" FOR WORK ACCEPTANCE.
22. THE CROSS SLOPE OF THE CURB RAMP SHALL BE AS FLAT AS POSSIBLE AND STILL PROVIDE POSITIVE DRAINAGE. THE CROSS SLOPE OF A CURB RAMP SHALL BE 1.5% MAXIMUM FOR DESIGN AND LAYOUT, AND 2% MAXIMUM FOR WORK ACCEPTANCE. SEE NOTE 12 FOR EXCEPTIONS. WHERE THE EXISTING ROADWAY GRADE EXCEEDS 2%, THE CURB RAMP MAY BE WARPED ACCORDING TO THE DETAIL ON SHEET 8 OF 9 TO TIE INTO THE DROP CURB.
23. RAMP SIDE OPTIONS ARE DETAILED ON SHEET 3 OF 9 FOR USE WITHIN THE BUFFER ZONE. WHERE A PEDESTRIAN CIRCULATION PATH CROSSES THE CURB RAMP, FLARED SIDES SHALL BE INSTALLED WITH A MAXIMUM SLOPE OF 9.5% FOR DESIGN AND LAYOUT, AND 10% MAXIMUM FOR WORK ACCEPTANCE. THE SLOPE OF FLARED SIDES IS MEASURED PARALLEL TO THE CURB LINE.
24. THE BACKSIDE OF A PARALLEL RAMP SHOULD BE GRADED TO A MAXIMUM SLOPE OF 2% TO MATCH EXISTING TERRAIN, UNLESS OTHERWISE SHOWN IN THE CONTRACT DOCUMENTS. WHERE GRADING IS NOT FEASIBLE DUE TO LIMITED ROW OR PHYSICAL CONSTRAINTS, A BACK CURB MAY BE INSTALLED. SEE DETAILS ON SHEET 3 OF 9 AND SHEET 9 OF 9.
25. DEPARTMENT PREFERENCE IS TO INSTALL TWO CURB RAMPS AT A STREET CORNER THAT SERVES BOTH CROSSINGS. WHERE EXISTING PHYSICAL CONSTRAINTS PREVENT TWO CURB RAMPS FROM BEING INSTALLED AT A STREET CORNER THAT SERVES BOTH CROSSINGS, A SINGLE DIAGONAL CURB RAMP WILL BE PERMITTED TO SERVE BOTH PEDESTRIAN STREET CROSSINGS.

TURNING SPACE AND CLEAR SPACE NOTES:

26. WHERE A CHANGE IN DIRECTION IS REQUIRED TO UTILIZE A CURB RAMP, A TURNING SPACE SHALL BE PROVIDED AT THE BASE OF THE TOP OF CURB RAMP AS APPLICABLE. TURNING SPACES SHALL BE PERMITTED TO OVERLAP CLEAR SPACES.
27. WHERE THERE ARE NO VERTICAL CONSTRAINTS AT THE BACK OF SIDEWALK, (E.G., VERTICAL CURB, BUILDINGS, FENCES) THE TURNING SPACE DIMENSIONS SHALL BE 4'-0" x 4'-0" MINIMUM. WHERE THE TURNING SPACE IS CONSTRAINED AT THE BACK OF SIDEWALK, THE TURNING SPACE SHALL BE 4'-0" x 5'-0" MINIMUM. THE 5'-0" DIMENSION SHALL BE PROVIDED PERPENDICULAR TO THE CONSTRAINT.
28. TURNING SPACES SHALL NOT BE DESIGNED WITH CROSS SLOPE GREATER THAN 1.5% IN ANY DIRECTION, WHILE PROVIDING POSITIVE DRAINAGE. THE MAXIMUM CROSS SLOPE FOR WORK ACCEPTANCE IS 2.0%. A NONSTANDARD FEATURE JUSTIFICATION IS REQUIRED WHERE TURNING SPACES EXCEED 2.0% IN ANY DIRECTION.
29. BEYOND THE BOTTOM GRADE BREAK, A CLEAR SPACE OF 4'-0" x 4'-0" MINIMUM SHALL BE PROVIDED WITHIN THE WIDTH OF THE PEDESTRIAN CROSSWALK, AND OUTSIDE THE PARALLEL VEHICLE TRAVEL LANE. THE CLEAR SPACE MAY OVERLAP TURNING SPACES, DETECTABLE WARNING SURFACES, AND DROP CURBS.

DETECTABLE WARNING NOTES:

30. DETECTABLE WARNING SURFACES SHALL BE PROVIDED AT THE FOLLOWING LOCATIONS ON PEDESTRIAN ACCESS ROUTES:
    A. CURB RAMPS AND BLENDED TRANSITIONS AT PEDESTRIAN STREET CROSSINGS.
    B. PEDESTRIAN REFUGE ISLANDS WHERE THE LENGTH OF THE PEDESTRIAN ACCESS ROUTE ACROSS THE REFUGE ISLAND IS GREATER THAN OR EQUAL TO 6 FEET.
    C. PEDESTRIAN AT-GRADE RAIL CROSSINGS NOT LOCATED WITHIN A STREET OR HIGHWAY.
31. DETECTABLE WARNING SURFACES SHALL BE PROVIDED WHERE THE PEDESTRIAN ACCESS ROUTE CROSSES DRIVEWAYS WITH SIGNAL, YIELD OR STOP CONTROL. DETECTABLE WARNING SURFACES SHALL NOT BE PROVIDED AT CROSSINGS OF UNCONTROLLED DRIVEWAY APRONS.
32. SOME DETECTABLE WARNING PRODUCTS REQUIRE A CONCRETE BORDER FOR PROPER INSTALLATION. IF REQUIRED, THE BORDER SHALL NOT EXCEED 2", WHERE THE BACK OF CURB EDGE IS TOOLED TO PROVIDE A RADIUS, THE BORDER DIMENSION SHALL BE MEASURED FROM THE INSIDE EDGE OF THE CURB RADIUS.
33. THE DETAILS PROVIDED ARE NOT DRAWN TO SCALE. THE QUANTITY OF DOMES DEPICTED ON THE DETECTABLE WARNING UNIT IS FOR ILLUSTRATION ONLY. THE SIZE OF THE DETECTABLE WARNING FIELD SHALL BE 24" MINIMUM IN THE DIRECTION OF TRAVEL, AND SHALL EXTEND THE FULL WIDTH OF THE CURB RAMP OR FLUSH SURFACE, EXCLUDING ANY FLARED SIDES. THE WIDTH OF THE DETECTABLE WARNING FIELD INCLUDES A CONCRETE BORDER, IF PROVIDED.
34. ON SLOPES OF 5% OR GREATER, THE ROWS OF DOMES SHALL BE ALIGNED TO BE PERPENDICULAR OR RADIAL TO THE LOWER GRADE BREAK ON THE RAMP RUN. WHERE DOMES ARE ARRAYED RADIALLY THEY MAY DIFFER IN DOME DIAMETER AND CENTER-TO-CENTER SPACING WITHIN THE DIMENSIONS SPECIFIED ON SHEET 2. ON SLOPES LESS THAN 5%, DOME ORIENTATION IS LESS CRITICAL AND MAY DIFFER FROM PERPENDICULAR OR RADIAL ALIGNMENT TO THE GRADE BREAK.
35. THE DETECTABLE WARNING FIELD SHALL BE THE COLOR SPECIFIED IN THE CONTRACT DOCUMENTS OR MEET THE REQUIREMENTS OF THE STANDARD SPECIFICATIONS. DETECTABLE WARNING SURFACES SHALL CONTRAST VISUALLY WITH ADJACENT GUTTER, STREET OR HIGHWAY, OR PEDESTRIAN ACCESS ROUTE SURFACE, EITHER LIGHT-ON-DARK OR DARK-ON-LIGHT.

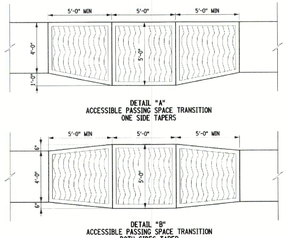

DETAIL "A"
ACCESSIBLE PASSING SPACE TRANSITION
ONE SIDE TAPERS

DETAIL "B"
ACCESSIBLE PASSING SPACE TRANSITION
BOTH SIDES TAPER

DESIGN ELEMENT TOLERANCES

ELEMENT	DESIGN AND FIELD LAYOUT LIMIT	LIMIT FOR WORK ACCEPTANCE
SIDEWALK CROSS SLOPE - SEE NOTE 12	1.5% MAX.	2.0% MAX.
SIDEWALK GRADE (RUNNING SLOPE) - SEE NOTE 11	4.5% MAX.	5.0% MAX.
CURB RAMP GRADE (RUNNING SLOPE) - SEE NOTE 21	7.5% MAX.	8.3% MAX.
BLENDED TRANSITION GRADE (RUNNING SLOPE) - SEE NOTE 7	4.5% MAX.	5.0% MAX.

ALL VALUES SHOWN ON THE 608-01 STANDARD SHEETS REFER TO DESIGN AND FIELD LAYOUT LIMITS.

FOR ADDITIONAL REQUIREMENTS AND TOLERANCES, SEE "CRITICAL ELEMENTS FOR THE DESIGN, LAYOUT, AND CONSTRUCTION OF PEDESTRIAN FACILITIES" AVAILABLE ON THE NYSDOT HIGHWAY DESIGN MANUAL CHAPTER 18 WEBSITE.

NEW YORK STATE OF OPPORTUNITY. Department of Transportation

U.S. CUSTOMARY STANDARD SHEET

SIDEWALK AND CURB RAMP DETAILS
(SHEET 1 OF 9)

APPROVED MARCH 07, 2016	ISSUED UNDER EB 16-012
/S/ RICHARD W. LEE, P.E. DEPUTY CHIEF ENGINEER (DESIGN)	608-01

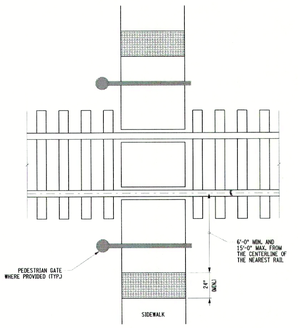

DETECTABLE WARNINGS AT RAILROAD CROSSING

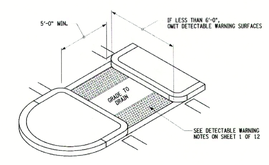

DETECTABLE WARNINGS AT PEDESTRIAN REFUGE ISLANDS
NON-ELEVATED CROSSING

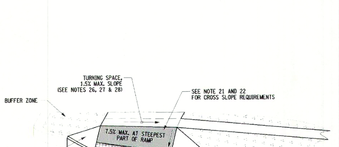

CURB RAMP CROSS SLOPE TRANSITION

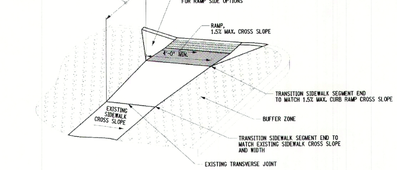

TRANSITION BETWEEN CURB RAMP AND EXISTING SIDEWALK
USE FOR CROSS SLOPE AND WIDTH TRANSITIONS

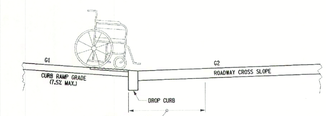

COUNTER SLOPE CONDITION 1
A = G2 − G1
ALGEBRAIC DIFFERENCE BETWEEN ROADWAY CROSS SLOPE AND CURB RAMP GRADE IS LESS THAN 12.5%

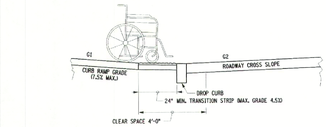

COUNTER SLOPE CONDITION 2
A = G2 + G1
ALGEBRAIC DIFFERENCE BETWEEN ROADWAY SLOPE AND CURB RAMP GRADE IS GREATER THAN 12.5%. TRANSITION STRIP REQUIRED MAX. GRADE 4.5%

COUNTER SLOPE CONDITIONS

NOTE:
ALL NOTES REFERENCED ON THIS SHEET CAN BE FOUND ON STANDARD SHEET 608-01, SHEET 1 OF 12.

NEW YORK STATE OF OPPORTUNITY. Department of Transportation

U.S. CUSTOMARY STANDARD SHEET

PEDESTRIAN FACILITIES
(SHEET 8 OF 12)

APPROVED FEBRUARY 05, 2020	ISSUED UNDER EI 20-005
/S/ RICHARD WILDER, P.E. DEPUTY CHIEF ENGINEER (DESIGN)	608-01

JMC Planning, Engineering, Landscape Architecture & Land Surveying, PLLC
JMC Site Development Consultants, Inc.
John Meyer Consulting, Inc.
120 BEDFORD ROAD • ARMONK, NY 10504
voice 914.273.5225 • fax 914.273.2102
www.jmcplic.com

No.	Revision	Date
1.	ISSUED FOR BUILDING PERMIT	03/12/2021

Previous Editions Obsolete

CONSTRUCTION DETAILS

500 COMMERCE STREET
REDEVELOPMENT
500 COMMERCE STREET
HAWTHORNE, NY 10532

ANY ALTERATION OF PLANS, SPECIFICATIONS, PLATS AND REPORTS BEARING THE SEAL OF A LICENSED PROFESSIONAL ENGINEER OR LICENSED LAND SURVEYOR IS A VIOLATION OF SECTION 7209 OF THE NEW YORK STATE EDUCATION LAW, EXCEPT AS PROVIDED FOR BY SECTION 7209, SUBSECTION 2.

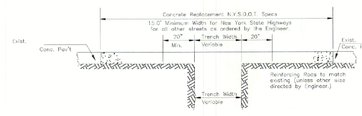

Note:
Concrete Shall Be Air Entrained With An Air
Content As Follows:

Conc. Class	Min%	Design%	Max%
C	4	5.5	7

DETAIL
OF
CONCRETE PAVEMENT REPLACEMENT
OVER TRENCH
Scale:N.T.S.

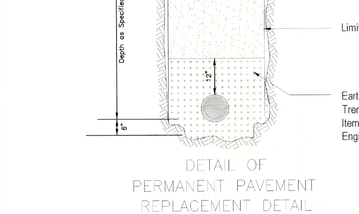

DETAIL OF
PERMANENT PAVEMENT
REPLACEMENT DETAIL
Scale : N.T.S.

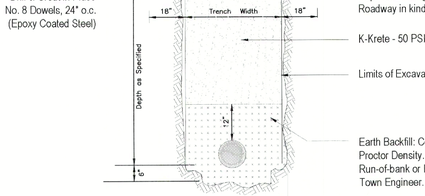

DETAIL OF PERMANENT PAVEMENT
AND CONCRETE REPLACEMENT DETAIL
Scale : N.T.S.

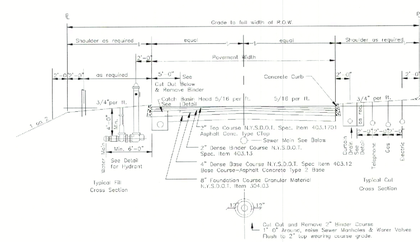

TYPICAL ROAD SECTION
Scale:N.T.S.

NOTE:
1. All shoulders and slopes to be fine graded and seeded with approved grass seed at the rate of 1.7lb per 100 sq. ft. after 4" of Topsoil has been placed.
2. Should rock be encountered in the road bed it must be removed to the depth of the finished subgrade.
3. Install all curb type catch basins such that the top of the curb inlet casting is at the elevation of the top of the concrete curb and the top of the grate is at the elevation of the top of the binder course. Use 5" inch curb inlet castings with 5" inch concrete curbs. Prior to installation of the top wearing course, cut out the 2" inch binder course for a distance of 1 foot all around. Pour the 2" inch thick wearing course to the elevation of the catch basin grate.
4. Install all manhole frames and covers to the grade of the 2" inch binder course immediately prior to placing the 2" inch top wearing courses, raise all manhole frames and covers using bricks and mortar under the frame.
5. Guiderails shall be installed so as not to interfere with underground utilities.

TABLE NY1-A
BARRIER VEHICLE USE REQUIREMENTS
(LONG TERM, INTERMEDIATE TERM, AND SHORT TERM STATIONARY CLOSURES)

CLOSURE TYPE	EXPOSURE CONDITION[1]	USE REQUIREMENTS[4,5] FREEWAY	NON-FREEWAY (PRECONSTRUCTION POSTED SPEED LIMIT) ≥ 45 MPH	35-40 MPH	≤ 30 MPH
LANE CLOSURE	WORKERS ON FOOT OR IN VEHICLES EXPOSED TO TRAFFIC	REQUIRED[3]	REQUIRED[3]	REQUIRED[3]	OPTIONAL[2]
	NON-TRAVERSABLE HAZARD (E. EQUIPMENT, MATERIALS, EXCAVATION) ONLY NO WORKERS EXPOSED	REQUIRED[3]	REQUIRED[3]	OPTIONAL[2]	OPTIONAL[2]
SHOULDER CLOSURE	WORKERS ON FOOT OR IN VEHICLES EXPOSED TO TRAFFIC	REQUIRED[3]	REQUIRED[3]	OPTIONAL[2]	OPTIONAL[2]
	NON-TRAVERSABLE HAZARD (E. EQUIPMENT, MATERIALS, EXCAVATION) ONLY NO WORKERS EXPOSED	REQUIRED[3]	OPTIONAL[2]	OPTIONAL[2]	OPTIONAL[2]

1. THE EXPOSURE CONDITIONS DESCRIBED IN TABLE NY1-A ASSUMES THERE IS NO POSITIVE PROTECTION (TEMPORARY TRAFFIC BARRIER) PRESENT. WHERE WORKERS OR HAZARDS ARE PROTECTED BY A TEMPORARY TRAFFIC BARRIER, BARRIER VEHICLES ARE NOT REQUIRED.
2. WHERE THE REQUIREMENT IS "OPTIONAL", EITHER A BARRIER VEHICLE OR THE STANDARD LONGITUDINAL BUFFER SPACE (TABLE 6C-2) SHALL BE PROVIDED.
3. REQUIREMENTS SHALL INCLUDE PROVIDING A SEPARATE BARRIER VEHICLE FOR EACH CLOSED LANE AND EACH CLOSED PAVED SHOULDER 8' OR GREATER IN WIDTH. IF THE WORK SPACE MOVES WITHIN THE STATIONARY CLOSURE, THE BARRIER VEHICLE SHALL BE REPOSITIONED ACCORDINGLY. BARRIER VEHICLES PROTECTING NON-TRAVERSERABLE HAZARDS SHALL REMAIN IN PLACE DURING BOTH WORKING AND NON-WORKING HOURS UNTIL THE HAZARD NO LONGER EXISTS. EXCEPTIONS TO THESE REQUIREMENTS MAY BE MADE, AS APPROVED BY THE REGIONAL DIRECTOR OR HIS/HER DESIGNEE, WHERE BARRIER VEHICLE PLACEMENT WOULD BE INEFFECTIVE OR WOULD INTERFERE WITH THE SAFE OPERATION OF TRAFFIC.
4. BARRIER VEHICLES ARE NOT REQUIRED FOR MILLING AND/OR PAVING OPERATIONS, BUT THE STANDARD LONGITUDINAL BUFFER SPACE ITABLE 6C-2) SHALL BE PROVIDED.
5. BARRIER VEHICLES ARE NOT REQUIRED FOR FLAGGING OPERATIONS, BUT THE STANDARD LONGITUDINAL BUFFER SPACE ITABLE6C-2) SHALL BE PROVIDED.

TABLE NY1-B
SHADOW VEHICLE USE REQUIREMENTS
(MOBILE CLOSURES)

CLOSURE TYPE	EXPOSURE CONDITION	USE REQUIREMENTS FREEWAY	NON-FREEWAY (PRECONSTRUCTION POSTED SPEED LIMIT) ≥ 45 MPH	35-40 MPH	≤ 30 MPH
LANE CLOSURE	WHEN ANY WORKER, VEHICLE, OR OTHER HAZARD IS EXPOSED TO TRAFFIC	REQUIRED[2,4]	REQUIRED[2,4]	REQUIRED[2,4]	REQUIRED[2,4]
SHOULDER CLOSURE	WHEN ANY WORKER, VEHICLE, OR OTHER HAZARD IS EXPOSED TO TRAFFIC	REQUIRED[2,4]	REQUIRED[2,4]	REQUIRED[2,4]	REQUIRED[2,4]

1. A MOBILE CLOSURE SHALL BE USED FOR ANY WORK ACTIVITY THAT MOVES CONTINUOUSLY OR INTERMITTENTLY ALONG THE TRAVELED WAY OR SHOULDER SLOWER THAN THE PREVAILING SPEED OF TRAFFIC. CHANNELIZING DEVICES ARE NOT USED FOR MOBILE CLOSURES.
2. SHADOW VEHICLES SHALL BE EQUIPPED WITH AN APPROVED REAR MOUNTED ATTENUATOR (TRUCK MOUNTED OR TRAILER MOUNTED) FOR THE FOLLOWING MOBILE CLOSURES: LANE CLOSURES ON FREEWAYS, LANE CLOSURES ON NON-FREEWAY ROADWAYS HAVING A PRE-CONSTRUCTION POSTED SPEED LIMIT OF 35 MPH OR MORE, SHOULDER CLOSURES ON FREEWAYS, AND SHOULDER CLOSURES ON NON-FREEWAY ROADWAYS HAVING A PRE-CONSTRUCTION SPEED LIMIT OF 45 MPH OR MORE.
3. FOR MOBILE LANE CLOSURES ON NON-FREEWAY ROADWAYS HAVING A PRE-CONSTRUCTION POSTED SPEED LIMIT OF 30 MPH OR LESS AND MOBILE SHOULDER CLOSURES ON NON-FREEWAY ROADWAYS HAVING A PRE-CONSTRUCTION SPEED LIMIT OF 40 MPH OR LESS, SHADOW VEHICLES ARE NOT REQUIRED TO BE EQUIPPED WITH A REAR MOUNTED ATTENUATOR.
4. A SHADOW VEHICLE IS USED TO PROTECT EXPOSED WORKERS (ON FOOT OR IN A VEHICLE) AND SHALL BE REQUIRED FOR ALL MOBILE CLOSURES. SHADOW VEHICLE REQUIREMENTS SHALL INCLUDE PROVIDING A SEPARATE SHADOW VEHICLE FOR EACH CLOSED LANE AND EACH CLOSED PAVED SHOULDER 8' OR GREATER IN WIDTH. ADDITIONAL SHADOW VEHICLES MAY BE REQUIRED TO PROMOTE THE SAFE OPERATION OF TRAFFIC AND THE INCREASED PROTECTION OF EXPOSED WORKERS, AS DIRECTED BY THE REGIONAL DIRECTOR OR HIS/HER DESIGNEE.

TABLE 6H-4 FORMULAS FOR DETERMINING TAPER LENGTHS

SPEED LIMIT (S) (MPH)	TAPER LENGTH (L) (FT.)
(40 MPH OR LESS	$L = WS^2/60$
(45 MPH OR MORE	$L = WS$

L = TAPER LENGTH
W = WIDTH OF OFFSET (FT.)
S = PRECONSTRUCTION POSTED SPEED LIMIT (MPH)

STANDARD TAPER LENGTHS

LATERAL SHIFT OF TRAFFIC FLOW PATH	TEMPORARY TRAFFIC CONTROL ZONE POSTED SPEED LIMIT									
	(25 MPH)	(30 MPH)	(35 MPH)	(40 MPH)	(45 MPH)	(50 MPH)	(55 MPH)	(60 MPH)	(65 MPH)	(70 MPH)
4	45	60	85	110	180	200	220	240	260	280
5	55	75	105	135	225	250	275	300	325	350
6	65	90	125	160	270	300	330	360	390	420
7	75	105	145	190	315	350	385	420	455	490
8	85	120	165	215	360	400	440	480	520	560
9	95	135	185	240	405	450	495	540	585	630
10	105	150	205	270	450	500	550	600	650	700
11	115	165	225	295	495	550	605	660	715	770
12	125	180	245	320	540	600	660	720	780	840

TABLE 6C-2
LONGITUDINAL BUFFER SPACE

PRECONSTRUCTION POSTED SPEED LIMIT (MPH)	DISTANCE
25	155 FT.
30	200 FT.
35	250 FT.
40	305 FT.
45	360 FT.
50	425 FT.
55	495 FT.
60	570 FT.
65	645 FT.

TABLE NY2-A
PLACEMENT DISTANCE FOR BARRIER VEHICLES

| PRECONSTRUCTION

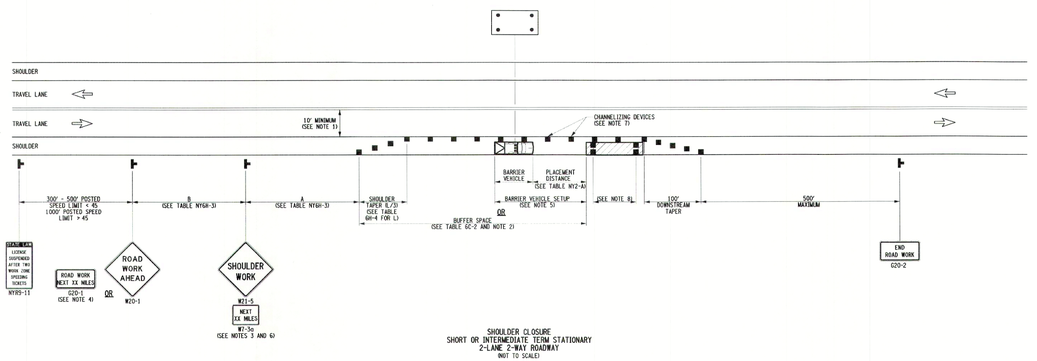

SHOULDER CLOSURE
SHORT OR INTERMEDIATE TERM STATIONARY
2-LANE 2-WAY ROADWAY
(NOT TO SCALE)

NOTES:

1. WHEN THE MINIMUM LANE WIDTH OF 10' CANNOT BE MAINTAINED DUE TO A SHOULDER CLOSURE, USE THE DETAIL FOR SHORT OR INTERMEDIATE TERM STATIONARY FLAGGING OPERATION.
2. NO WORK ACTIVITY OR STORAGE OF EQUIPMENT, VEHICLES, OR MATERIAL SHOULD OCCUR WITHIN A BUFFER SPACE.
3. WHEN THE DISTANCE BETWEEN THE ADVANCE WARNING SIGNS AND WORK IS 2 MILES TO 5 MILES, A SUPPLEMENTAL DISTANCE PLAQUE (W7-3a) SHOULD BE USED WITH THE SHOULDER WORK SIGN (W21-5).
4. THE ROAD WORK NEXT XX MILES SIGN (G20-1) MAY BE USED INSTEAD OF THE ROAD WORK AHEAD SIGN (W20-1) IF WORK LOCATIONS OCCUR OVER A DISTANCE OF MORE THAN 2 MILES.
5. FOR BARRIER VEHICLE USE REQUIREMENTS SEE TABLES NY1-A AND NY2-A ON THE STANDARD SHEET TITLED "WORK ZONE TRAFFIC CONTROL LEGENDS AND NOTES".
6. IN THOSE SITUATIONS WHERE MULTIPLE WORK LOCATIONS EXIST WITHIN A LIMITED DISTANCE MAKE IT PRACTICAL TO PLACE STATIONARY SIGNS, THE DISTANCE BETWEEN THE ADVANCE WARNING SIGN AND WORK SHALL NOT EXCEED 5 MILES.
7. CHANNELIZING DEVICE SPACING (CENTER TO CENTER) SHALL NOT EXCEED 40' IN THE ACTIVE WORK SPACE.
8. TRANSVERSE DEVICES SHALL BE REQUIRED (AS PER 619 STANDARD SPECIFICATIONS) WHEN A PAVED SHOULDER HAVING A WIDTH OF 8' OR GREATER IS CLOSED FOR A DISTANCE GREATER THAN 1500'.

NOTE: SEE STANDARD SHEET TITLED "WORK ZONE TRAFFIC CONTROL LEGENDS AND NOTES" FOR LEGEND OF SYMBOLS AND/OR LETTER CODES USED IN THIS DRAWING.

STATE OF NEW YORK
DEPARTMENT OF TRANSPORTATION

U.S. CUSTOMARY STANDARD SHEET

SHOULDER CLOSURE
2-LANE 2-WAY ROADWAY

APPROVED SEPTEMBER 15, 2009
/S/ DAVID J. CLEMENTS, P.E.
DIRECTOR, OFFICE OF TRAFFIC SAFETY AND MOBILITY

ISSUED UNDER EB 09-025
619-20

EFFECTIVE DATE: 01/07/10

SHOULDER CLOSURE 2-LANE 2-WAY ROADWAY | 19

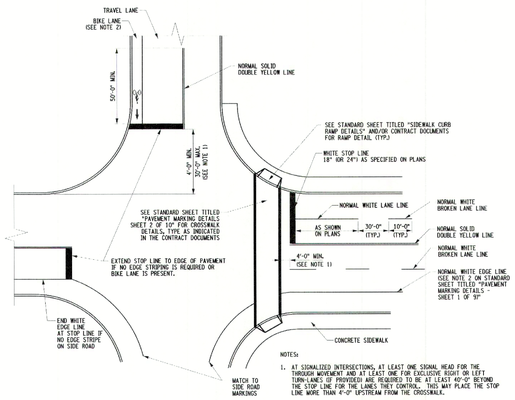

NOTES:

1. AT SIGNALIZED INTERSECTIONS, AT LEAST ONE SIGNAL HEAD FOR THE THROUGH MOVEMENT AND AT LEAST ONE FOR EXCLUSIVE RIGHT OR LEFT TURN-LANES, IF PROVIDED) ARE REQUIRED TO BE AT LEAST 40'-0" BEYOND THE STOP LINE. FOR THE LANES, THEY CONTROL, THIS MAY PLACE THE STOP LINE MORE THAN 4'-0" UPSTREAM FROM THE CROSSWALK.
2. DISCONTINUE BIKE LANE MARKINGS AT LEAST 100'-0" BEFORE INTERSECTION IF NO MARKED BIKE LANE IS PRESENT DOWNSTREAM.

TYPICAL INTERSECTION MARKINGS

PAVEMENT MARKINGS | 20

X

No.	Revision	Date
1.	ISSUED FOR BUILDING PERMIT	03/12/2021

Previous Editions Obsolete

JMC Planning, Engineering, Landscape Architecture & Land Surveying, PLLC
JMC Site Development Consultants, LLC
John Meyer Consulting, Inc.
120 BEDFORD ROAD • ARMONK, NY 10504
voice 914.273.5225 • fax 914.273.2102
www.jmcpllc.com

JMC

CONSTRUCTION DETAILS

500 COMMERCE STREET
REDEVELOPMENT
500 COMMERCE STREET
HAWTHORNE, NY 10532

ANY ALTERATION OF PLANS, SPECIFICATIONS, PLATS AND REPORTS BEARING THE SEAL OF A LICENSED PROFESSIONAL ENGINEER OR LICENSED LAND SURVEYOR IS A VIOLATION OF SECTION 7209 OF THE NEW YORK STATE EDUCATION LAW, EXCEPT AS PROVIDED FOR BY SECTION 7209, SUBSECTION 2.

STATE OF NEW YORK
ROBERT M. PE
LICENSED PROFESSIONAL

Drawn:	SPG	Approved:	MTP
Scale:	NOT TO SCALE		
Date:	12/15/2020		
Project No:	18158		
18158-DETAILS	HP-10		-

Drawing No:
HP-10

COPYRIGHT © 2021 by JMC. All Rights Reserved. No part of this document may be reproduced, stored in a retrieval system, or transmitted, in any form or by means, electronic, photographic, recording or otherwise, without the prior written permission of JMC PLANNING, ENGINEERING, LANDSCAPE ARCHITECTURE & LAND SURVEYING, PLLC | JMC SITE DEVELOPMENT CONSULTANTS, LLC | JOHN MEYER CONSULTING, INC. (JMC). Any modification or alteration to this document without the written permission of JMC shall render it invalid and unusable.

NOT FOR CONSTRUCTION

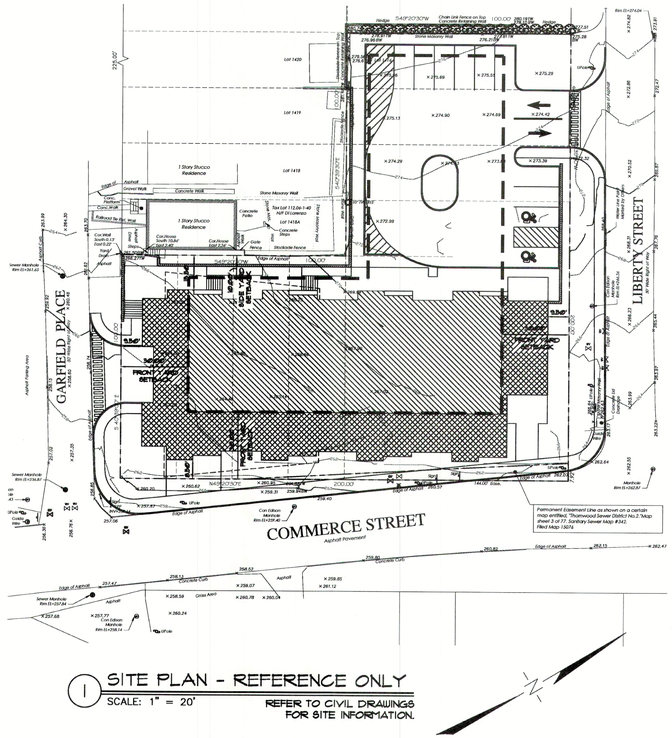

1 SITE PLAN - REFERENCE ONLY

SCALE: 1" = 20'

REFER TO CIVIL DRAWINGS FOR SITE INFORMATION.

SYMBOLS

ROOM NAME
100 — ROOM DESIGNATION

DOOR NUMBER

W1 — WINDOW NUMBER

L1 — LOUVER NUMBER

A — COLUMN NUMBER

FIN FLR +0.00' — ELEVATION TARGET

1 — REVISION NUMBER

1 — KEYED NOTE DESIGNATION

1 — WALL/PARTITION TYPE

SECTION
A1 / A401 — SECTION IDENTIFICATION, VIEW DIRECTION, SHEET WHERE SECTION IS DRAWN

DETAIL
A1 / A401 — DETAIL IDENTIFICATION, SHEET WHERE DETAIL IS SHOWN

INTERIOR ELEVATION
ELEVATION IDENTIFICATION
A101 — SHEET WHERE ELEVATION IS DRAWN

BUILDING ELEVATION
A1 / A201 — ELEVATION IDENTIFICATION, SHEET WHERE ELEVATION IS DRAWN

NEW WALLS

NEW DOOR AND FRAME
DOOR NUMBER
REFER TO DOOR SCHEDULE ON DRAWING

ABBREVIATIONS

ACCESS	ACCESSIBLE
ACOUS	ACOUSTICAL
ACT	ACOUSTICAL CEILING TILE
AD	AREA DRAIN, ACCESS
ADJ	DOOR
AFF	ADJACENT
AFL	ABOVE FINISHED FLOOR
AHU	ACCESS FLOOR(ING)
ALUM	AIR HANDLING UNIT
APPD	ALUMINUM
ARCH	APPROVED
ASPH	ARCHITECT(URE,URAL)
	ASPHALT
BALC	BALCONY
B/C	BOTTOM OF CURB
BD	BOARD
BET	BETWEEN
BLDG	BUILDING
BLKG	BLOCKING
BM	BEAM
BOT	BOTTOM
BRG	BEARING
BRK	BRICK
BRKT	BRACKET
BSMT	BASEMENT
BUR	BUILT-UP ROOF
C	CONDUIT
CAB	CABINET
CAT	CATALOG
CB	CATCH BASIN
C.BD.	CHALKBOARD
CI	CAST IRON
CJ	CONTROL JOINT
CLG	CEILING
CLL	CONTRACT LIMIT LINE
CLOS	CLOSET
CLR	CLEAR(ANCE)
CMU	CONCRETE MASONRY UNIT
CO	CLEAN OUT
COL	COLUMN
CONC	CONCRETE
COND	CONDENS(ATE, ER, ING)
CONN	CONNECTION
CONST	CONSTRUCTION
CONT	CONTINU(OUS, ATION)
CONTR	CONTRACTOR
COORD	COORDINATE
CORR	CORRIDOR
CPT	CARPET
CRS	COURSE
CT	CERAMIC TILE
CW	COLD WATER
CWR	CHILLED WATER RETURN
D	DRAIN
DBL	DOUBLE
DEMO	DEMOLISH
DEPT	DEPARTMENT
DET	DETAIL
DF	DRINKING FOUNTAIN
DI	DUCTILE IRON, DROP INLET
DIA	DIAMETER
DIAG	DIAGONAL
DIM	DIMENSION
DISP	DISPENSER
DL	DEAD LOAD
DN	DOWN
DOM	DOMESTIC
DR	DOOR
DW	DISHWASHER
DWG	DRAWING
EA	EACH
EF	EXHAUST FAN
EHD	ELECTRIC HAND DRYER
EIFS	EXTERIOR INSULATION & FINISH SYSTEM
EJ	EXPANSION JOINT
EL	ELEVATION
ELEC	ELECTRICAL
ELEV	ELEVATOR OR ELEVATION
EMER	EMERGENCY
ENCL	ENCLOS(E, SURE)
EP	ELECTRICAL PANEL BOARD
EPDM	ETHYLENE PROPYLENE DIENE MONOMER
EQ	EQUAL
EQPT	EQUIPMENT
ETR	EXISTING TO REMAIN
ETRD	EXISTING TO BE REMOVED
ETRL	EXISTING TO BE RELOCATED
EW	EACH WAY
EWC	ELECTRIC WATER COOLER
EXH	EXHAUST
EXIST	EXISTING
EXP	EXPANSION
EXT	EXTERIOR
FAI	FRESH AIR INTAKE
FB	FOILBACKED
FD	FLOOR DRAIN, FIRE DAMPER
FDN	FOUNDATION
FE	FIRE EXTINGUISHER
FEC	FIRE EXTINGUISHER CABINET
FF	FINISHED FLOOR
FH	FIRE HYDRANT
FIN	FINISH(ED)
FL, FLR	FLOOR
FLUOR	FLUORESCENT
F.O.	FINISHED OPENING
FOB	FACE OF BRICK
FOC	FACE OF CONCRETE
FPWH	FREEZE PROOF WALL HYDRANT
FRT	FIRE RETARDANT TREATED
FT	FEET, FOOT
FS	FLOOR SINK
FTG	FOOTING
G	GAS
GA	GAGE
GALV	GALVANIZED
GL	GLASS/GLAZING
GWB	GYPSUM WALL BOARD
GYP	GYPSUM
HB	HOSE BIBB
HC	HOLLOW CORE
HDR	HEADER
HDW	HARDWARE
HDWD	HARDWOOD
HM	HOLLOW METAL
HOR	HORIZONTAL
HP	HIGH POINT
HR	HOUR
HT	HEIGHT
HTG	HEATING
HTR	HEATER
HVAC	HEATING, VENTILATING, AIR CONDITIONING
HW	HOT WATER
HWD	HARDWOOD
HWR	HOT WATER RETURN
ID	INSIDE DIAMETER
IN	INCH
I.E.	THAT IS
INCAN	INCANDESCENT
INSUL	INSULAT(E, D, ION)
INT	INTERIOR
INV	INVERT
JB	JUNCTION BOX
JC OR JAN	JANITOR'S CLOSET
JT	JOINT
L	LENGTH, LONG, ANGLE
LAB	LABORATORY
LAM	LAMINATE(D)
LAV	LAVATORY
LCC	LEAD COATED COPPER
LIN	LINEN
LL	LIVE LOAD
LLH	LONG LEG HORIZONTAL
LLV	LONG LEG VERTICAL
LMF	LIGHT GAGE METAL FRAMING
LP	LOW POINT (LOW PRESSURE IN THE CONTEXT OF HVAC DRAWINGS)
MAX	MAXIMUM
MC	STRUCTURAL SHAPE MISC. CHANNEL IN THE CONTEXT OF STRUCTURAL DRAWINGS
MECH	MECHANICAL
MEMB	MEMBRANE
MFR	MANUFACTURER
MH	MANHOLE
MICROW	MICROWAVE OVEN
MIN	MINIMUM
MO	MASONRY OPENING
MTD	MOUNTED
MTG	MOUNTING
MTL	METAL
N	NORTH
NIC	NOT IN CONTRACT
NO.	NUMBER
NOM	NOMINAL
NTS	NOT TO SCALE
OA	OVERALL
OC	ON CENTER
OD	OUTSIDE DIAMETER
OH	OVERHEAD
OPG	OPENING
OPP	OPPOSITE
OZ	OUNCE
P	POLE
PB	PULLBOX
PCC	PRECAST CONCRETE
PD	PRESSURE DROP
PH	PHASE
PIL	PILASTER
PL	PLATE
PLAM	PLASTIC LAMINATE
PLAS	PLASTER
PLMB	PLUMBING
PLYWD	PLYWOOD
PNL	PANEL
POLY	POLYISOCYANURATE
PSF	POUNDS PER SQUARE FOOT
PSI	POUNDS PER SQUARE INCH
PT	PRESSURE TREATED
PTD	PAINT(ED)
PTN	PARTITION
PVC	POLYVINYL CHLORIDE
QT	QUARRY TILE
QTY	QUANTITY
R	RISER, RADIUS
RAD	RADIUS
RCP	REINFORCED CONCRETE PIPE
RD	ROOF DRAIN
REFG	REFRIGERAT(OR, ANT, ATION)
REFL	REFLECTED
REINF	REINFORCE(ED, MENT)
REQD	REQUIRED
RESIL	RESILIENT
RLE	RELOCATED EXISTING
RM	ROOM
RND	ROUND
RO	ROUGH OPENING
RTU	ROOF TOP UNIT
S&R	SHELF AND ROD
SC	SOLID CORE
SHED	SCHEDULE(D)
SECT	SECTION
SF	SQUARE FEET
SG	SAFETY GLASS
SHT	SHEET
SIM	SIMILAR
SOG	(CONCRETE) SLAB ON GRADE
SP	SUMP PUMP
SPEC	SPECIFICATIONS
SQ	SQUARE
SS	STAINLESS STEEL, SANITARY SEWER
ST	STORM SEWER
STD	STANDARD
STL	STEEL
STOR	STORAGE
STRUCT	STRUCTURAL
SUSP	SUSPENDED
T	TREAD
T.O.	TOP OF
T&B	TOP & BOTTOM
T&G	TONGUE AND GROOVE
T.BD.	TACKBOARD
TC	TERNE COATED
T/C	TOP OF CURB
TELE	TELEPHONE
TEMP	TEMPERATURE
TERR	TERRAZZO
T/F	TOP OF FRAME
THD	THREAD(ED)
THK	THICK(NESS)
THR	THRESHOLD
TOIL	TOILET
TOS	TOP OF SLAB
TOW	TOP OF WALL
TS	STRUCTURAL TUBULAR STEEL
T/S, TOS	TOP OF STEEL
TV	TELEVISION
TYP	TYPICAL
UC	UNDERCUT
UG	UNDERGROUND
UH	UNIT HEATER
UL	UNDERWRITERS LABORATORIES
UNFIN	UNFINISHED
UNO	UNLESS NOTED OTHERWISE
UPS	UNINTERRUPTABLE POWER SUPPLY
UTIL	UTILITY
VAR	VARIES
VB	VINYL BASE
VCT	VINYL COMPOSITION TILE
VERT	VERTICAL
VEST	VESTIBULE
VIF	VERIFY IN FIELD
VIN	VINYL
VT	VAPOR TIGHT
VTR	VENT THROUGH ROOF
VWC	VINYL WALL COVERING
W/D	WASHER/DRYER
W	WIDE, WIDTH, WATER
W/	WITH
W/O	WITHOUT
WC	WATER CLOSET
WD	WOOD
WP	WATERPROOF
WSCT	WAINSCOT
WT	WEIGHT
WWF	WELDED WIRE FABRIC

GENERAL NOTES

1. ALL WORK, MATERIAL, METHODS, ETC. SHALL CONFORM TO ALL GOVERNING BUILDING CODES, REGULATIONS AND AGENCIES, INCLUDING THE AMERICANS WITH DISABILITIES ACT (ADA), AND THE 2020 BC NYS, 2020 PC NYS, 2020 MC NYS, FC NYS, 2020 ECCC NYS, WITH TOWN OF MOUNT PLEASANT ZONING & AMENDMENTS.
2. THE GENERAL CONTRACTOR SHALL FIELD VERIFY ALL DIMENSIONS, LOCATION OF ALL FRAMING MEMBERS, LINES OF SUPPORT, LOCATIONS OF ANCHOR BOLTS, HOLD DOWNS, EXISTING SITE CONDITIONS AND UTILITIES PRIOR TO ORDERING MATERIALS.
3. THE GENERAL CONTRACTOR SHALL BE RESPONSIBLE FOR VERIFYING ALL DIMENSIONS AND CONDITIONS THEREON BEFORE COMMENCING ANY WORK. REPORT ANY DISCREPANCIES AND/OR POTENTIAL PROBLEMS TO THE ARCHITECT PRIOR TO PROCEEDING. DIMENSIONS ARE TO FACE OF MASONRY, OR FACE OF GYP. BD. AT TYPICAL INTERIOR PARTITIONS, UNLESS NOTED OTHERWISE.
4. THE GENERAL CONTRACTOR SHALL BE SOLELY RESPONSIBLE FOR THE DESIGN, ADEQUACY, AND SAFETY OF ERECTION BRACING, SHORING AND TEMPORARY SUPPORTS, ETC. THE GENERAL CONTRACTOR IS RESPONSIBLE FOR THE FOR THE STABILITY OF THE STRUCTURE PRIOR TO THE CONSTRUCTION OF ALL SHEAR WALLS, ROOF SHEATHING, STRUCTURAL ELEMENTS AND FINISH MATERIALS.
5. GOVERNING CODES AND FIRE DEPARTMENT FIELD INSPECTOR SHALL DICTATE SIZE, TYPE, QUANTITY AND LOCATIONS OF BOTH TEMPORARY AND PERMANENT PORTABLE FIRE EXTINGUISHERS.
6. EXIT SIGNS, WHERE NOTED OR REQUIRED, SHALL BE WORDED 'EXIT' IN LETTERS HAVING THE PRINCIPLE STROKE OF NOT LESS THAN 3/4" WIDE AND AT LEAST 6" HIGH AND SHALL CONFORM TO CODES AND/OR APPLICABLE REGULATIONS.
7. ALL TOILET ROOMS SHALL BE VENTILATED PER 2020 MC NYS BY MECHANICAL MEANS, SEE APPLICABLE DRAWINGS.
8. THE GENERAL CONTRACTOR SHALL PROVIDE ALL NECESSARY CEILING OR WALL ACCESS PANELS (OR ACCESS DOORS) AS REQUIRED BY GOVERNING AGENCIES FOR AIR CONDITIONING, PLUMBING, FIRE SPRINKLER, AND ELECTRICAL SYSTEMS. PROVIDE APPROVED ASSEMBLIES WITH SELF-CLOSING DEVICES IN 1-HOUR RATED CONSTRUCTION.
9. THE GENERAL CONTRACTOR SHALL ENSURE THAT ALL MATERIALS, AS REQUIRED BY CODE, ARE TESTED BY INDEPENDENT LABORATORIES AND THAT RESULTS ARE FURNISHED TO LOCAL BUILDING AUTHORITIES, OWNER AND THE PROJECT CONSULTANTS.
10. EVERY EXIT DOOR SHALL BE OPEN ABLE FROM INSIDE WITHOUT THE USE OF A KEY OR ANY SPECIAL KNOWLEDGE OR EFFORT. SPECIAL LOCKING DEVICES SHALL BE OF AN APPROVED TYPE. FLUSH BOLTS OR SURFACE BOLTS ARE PROHIBITED.
11. EXIT DOORS MUST OPEN OVER A LANDING PER BC NYS 1010.1.6.
12. THE GENERAL CONTRACTOR SHALL PROVIDE AND INSTALL ADDRESS NUMBERS PER CITY REQUIREMENTS AT TRANSOMS OF STOREFRONT ENTRANCE DOORS) AND REAR DOORS IF REQUIRED BY THE GOVERNING AGENCY.
13. ALL EXPOSED ELECTRICAL EQUIPMENT SHALL BE PAINTED TO MATCH ADJACENT SURFACES.
14. THE GENERAL CONTRACTOR IS RESPONSIBLE FOR ALL CONSTRUCTION, DEMOLITION MEANS AND METHODS ON THE PROJECT. THE OWNER AND HIS CONSULTANTS SHALL NOT BE RESPONSIBLE FOR HOW THE WORK IS PERFORMED, SAFETY OR NEGLIGENT ACTS OR OMISSIONS BY THE GENERAL CONTRACTOR OR THE SUBCONTRACTORS ON THE JOB.
15. ANY CHANGES TO THE DESIGN, AFTER ISSUANCE OF A BUILDING PERMIT, SHALL BE SUBMITTED TO THE PRESIDING BUILDING AGENCY FOR APPROVAL BY THE GENERAL CONTRACTOR.
16. SEPARATE PERMITS REQUIRED FOR ELECTRICAL, PLUMBING, HVAC, AND DEMOLITION.
17. FIRE SPRINKLERS ARE TO BE INSTALLED PER NFPA 13. ALL FIXED FIRE PROTECTION EQUIPMENT SUCH AS STANDPIPES, SPRINKLER SYSTEMS AND FIRE ALARM SYSTEMS, MUST BE SUBMITTED TO THE BUILDING DIVISION AND APPROVED BY THE FIRE DEPARTMENT BEFORE THIS EQUIPMENT IS INSTALLED.
18. AUTOMATIC SPRINKLER SYSTEM SHALL BE SUPERVISED BY AN APPROVED CENTRAL, PROPRIETARY OR REMOTE, STATION SERVICE, OR SHALL BE PROVIDED WITH A LOCAL ALARM WHICH WILL GIVE AN AUDIBLE SIGNAL AT A CONSTANTLY ATTENDED LOCATION.

THE GENERAL NOTES ON THIS SHEET APPLY TO ALL ARCHITECTURAL DRAWINGS AND ALL WORK IN CONJUNCTION WITH ALL TRADES.

LIBERTY PLAZA SUITES

500 COMMERCE STREET
HAWTHORNE, NY 10532

ARCHITECT

dimovski architecture
59 Kensico Road, Thornwood, NY 10594
(914) 747-3500 | (914) 747-3588 fax
www.dimovskiarchitecture.com

STRUCTURAL ENGINEER

CHARLES A. MANGANARO CONSULTING ENGINEERS
A PROFESSIONAL CORPORATION
303 SOUTH BROADWAY, SUITE 223, TARRYTOWN, NY 10591-5488

SHAILESH R. NAIK, P.E.
NEW YORK LICENSE No. 072797-1

MEP ENGINEER

OLA Consulting Engineers
50 Broadway
Hawthorne, NY 10532
914.747.3800
8 West 38th Street, Suite 501
New York, NY 10018
646.849.4410
olace.com

NO.	REVISION/ISSUE	DATE
1	ISSUE FOR PERMIT	03/12/2021

SEAL

REGISTERED ARCHITECT PAULETTE DIMOVSKI STATE OF NEW YORK 032360

PROJECT

LIBERTY PLAZA SUITES
500 COMMERCE ST.
TOWN OF MT. PLEASANT, NY

DATE:	AUGUST 12, 2020
PROJECT NO:	DA 2034
DRAWN BY:	YK
CHECKED BY:	PD/SGD
SCALE:	AS NOTED

DRAWING TITLE

SITE PLAN, SYMBOLS, ABBREVIATIONS & GENERAL NOTES

SHEET NO.

G-001

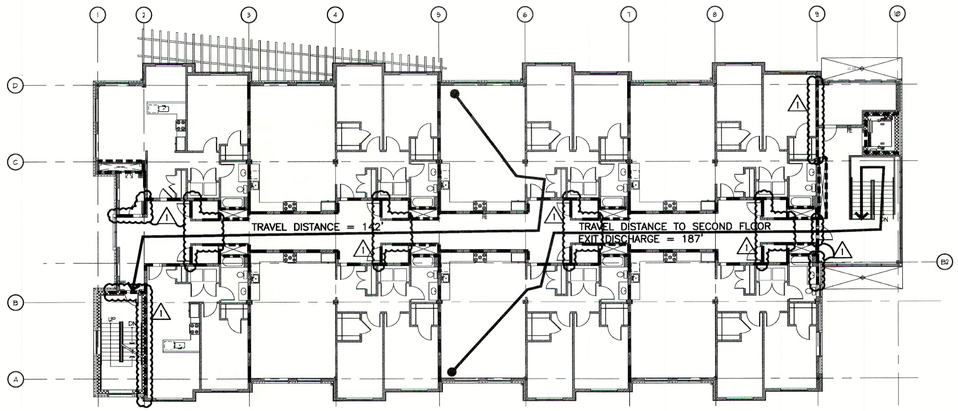

3 THIRD FLOOR - DWELLING UNITS
NTS

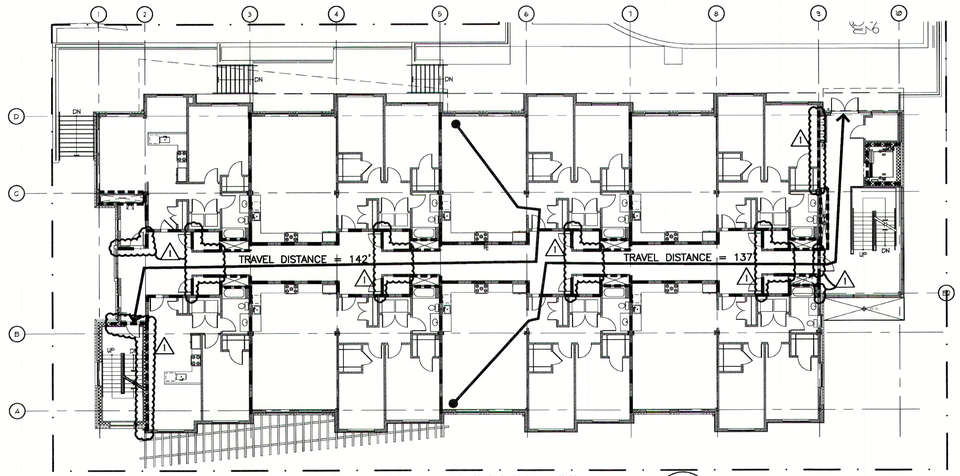

2 SECOND FLOOR - DWELLING UNITS
NTS

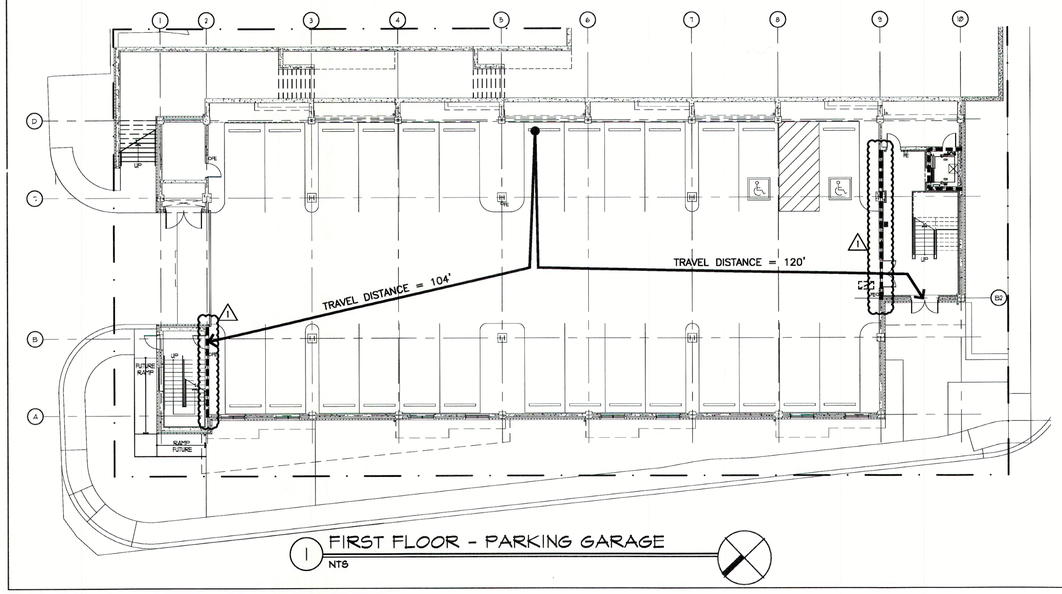

1 FIRST FLOOR - PARKING GARAGE
NTS

TABLE 508.4 17. REQUIRED FIRE SEPARATION OF OCCUPANCIES:
FOOTNOTE Ra: REFER TO 420
FOOTNOTE S–2b: ENCLOSED PARKING GARAGES – SEPARATION FOR PRIVATE VEHICLES SHALL BE REDUCED BY 1 HR, BUT NOT LESS THAN 1 HR.

406 MOTOR-VEHICLE RELATED OCCUPANCIES:
COMPLY WITH 406.2, 406.4, 406.6

708 FIRE PARTITIONS:
SEE BELOW.

711 FLOOR AND ROOF ASSEMBLIES:
SEE BELOW.

420.2 SEPARATION WALLS:
FIRE PARTITIONS REQUIRED BETWEEN DWELLING UNITS AND OTHER OCCUPANCIES. (REFER TO SECTION 708)

420.3 HORIZONTAL SEPARATION:
HORIZONTAL ASSEMBLIES REQUIRED BETWEEN DWELLING UNITS AND OTHER OCCUPANCIES. (REFER TO SECTION 711)

420.4 AUTOMATIC SPRINKLER SYSTEM REQUIRED FOR GROUP R IN ACCORDANCE WITH 903.2.8.
420.5 FIRE ALARM SYSTEMS AND SMOKE ALARMS ARE REQUIRED FOR R-2. (REFERENCE 907)
420.9 COOKING FACILITIES FOR R-2 (REFERENCE 917.2)

TABLE 601 18. FIRE RESISTANCE RATING FOR TYPE II-B:

TABLE 601	BUILDING ELEMENTS	0 HR	TABLE 601
TABLE 602	EXTERIOR WALLS (FIRE SEPARATION DISTANCE >30 AND 10<X<30)	0 HR	TABLE 602; 705.5
713.4	SHAFTS LESS THAN 4 STORIES	1 HR	BC 713.4
1023.2	INTERIOR EXIT STAIRWAYS (LESS THAN 4 STORIES)	1 HR	BC 1023.2

1019.3 EXIT ACCESS STAIRWAYS AND RAMPS:
EXCEPTION 4: SHAFT ENCLOSURE NOT REQUIRED IF EQUIPPED THROUGHOUT W/AUTOMATIC SPRINKLER SYSTEM IN ACCORDANCE W/903.3.1.1. PROTECTION BY DRAFT CURTAIN AND CLOSELY SPACED SPRINKLERS AS PER NFPA 13 REQUIRED.

	PARKING GARAGE/SEPARATED OCCUPANCY	1 HR	BC 508.4 FNb
	WALLS SEPARATING DWELLING UNITS	1 HR	BC 420.2, 708.3

708.3 EXCEPTION 2: TYPE II–B EQUIPPED THROUGHOUT W/ AUTOMATIC SPRINKLER SYSTEM IN ACCORDANCE W/903.3.1.1 FR RATING = ½ HR

TABLE 1020.1	CORRIDORS (R–2)	1/2 HR

1020.1 EXCEPTION 5: ADJACENT TO EXTERIOR WALL CAN HAVE UNPROTECTED OPENING AND UNRATED WALLS AS PERMITTED BY 602 AND 705.8

705.8.1 OPENINGS: EXCEPTION 2:
UNLIMITED UNPROTECTED OPENINGS BASED ON TABLE 602, TYPE II–B

705.8.5 VERTICAL SEPARATION OF OPENINGS: EXCEPTION 1 AND 2:
DOES NOT APPLY TO BUILDINGS 3 STORIES OR LESS; AND EQUIPPED THROUGHOUT WITH AUTOMATIC SPRINKLER SYSTEM PER 903.1.1 AND 903.3.1.2.

TABLE 705.8 MAXIMUM AREA OF EXTERIOR WALL OPENINGS: ⚠1
REAR WALL: 15–20 SEPARATION DISTANCE UP/S 75% > 24.7%, SEE A–200
SIDE/FRONT: 30 OR GREATER UP/S NO LIMIT

1015.8 WINDOW OPENINGS-FALL PROTECTION:
OPERABLE WINDOWS MIN 36" AFF (WHERE THE SILL OF THE OPENING IS GREATER THAN 72" ABOVE GRADE) NOT REQUIRED, SEE A–200

1003 19. MEANS OF EGRESS:

1004 OCCUPANT LOAD:
TABLE 1004.5 CODE DERIVED OCCUPANT LOAD PER 2020 BC NYS TABLE 1004.5 MAXIMUM FLOOR AREA ALLOWANCES PER OCCUPANT:

FIRST FLOOR: PARKING GARAGES, S–2	12,554 SF @ 1/200	= 62 OCCUPANTS
SECOND FLOOR: MULTISTORY UNITS, R–2	12,338 SF @ 1/200	= 61 OCCUPANTS
THIRD FLOOR: MULTISTORY UNITS, R–2	12,338 SF @ 1/200	= 61 OCCUPANTS
		= 184 TOTAL OCCS

1005 20. MEANS OF EGRESS SIZING:
1010.1.1 EXIT WIDTHS AT DOORS – 34" MIN. = 32" MIN. CLEAR
1011.2 WIDTHS AT STAIRWAYS – 44" MIN. (48" AS PER 1009.3.2 BUT TAKE EXCEPTION 1) 44" MIN. CLEAR BETWEEN HANDRAILS PROVIDED.
1011.2 WIDTHS AT CORRIDORS – 44" MIN. CLEAR

1005.3 EGRESS WIDTH:
0.3 INCH PER OCCUPANT AT STAIRS: 62 OCC X 0.3 = 18.6" ACTUAL PROVIDED 44"
0.2 INCH PER OCCUPANT AT OTHER COMPONENTS: 62 OCC X 0.2 = ACTUAL 34"

1006 21. NUMBER OF EXITS:
TABLE 1006.3.2 S–2: EXITS REQ'D: (2) FOR OL > 1–500 PER STORY = 2 PROVIDED
R–2: EXITS REQ'D: (2) FOR OL > 1–500 PER STORY = 2 PROVIDED

1006.3 ROOF: UNOCCUPIED
ONE EGRESS STAIR PROVIDED FOR ACCESS TO EQUIPMENT FOR MAINTENANCE.

712 VERTICAL OPENINGS:
712.1.12 EXIT ACCESS STAIRWAYS AND RAMPS PERMITTED AS PER 1019

1009 22. ACCESSIBLE MEANS OF EGRESS:
1009.3 TWO REQUIRED: STAIRWAYS ARE CONSIDERED PART OF THE ACCESSIBLE MEANS OF EGRESS.
AREA OF REFUGE NOT REQUIRED FOR R–2 AND EQUIPPED THROUGHOUT WITH AUTOMATIC SPRINKLER SYSTEM

1017 23. EXIT ACCESS TRAVEL DISTANCE:
TRAVEL DISTANCE: OCC S–2 W/SPRINKLER SYSTEM = 400' MAX. > 108' = O.K.
TRAVEL DISTANCE: OCC R–2 W/SPRINKLER SYSTEM = 250' MAX. > 145' = O.K.

1100 24. ACCESSIBILITY:
1104.1 ACCESSIBLE ROUTE:
SITE ARRIVAL POINTS:
TABLE 1017.2 ONE REQUIRED FROM ACCESSIBLE PARKING, ACCESSIBLE PASSENGER LOADING ZONE, PUBLIC TRANSPORTATION, AND PUBLIC STREETS OR SIDEWALKS.

1104.4 MULTISTORY BUILDINGS AND FACILITIES:
AT LEAST ONE SHALL CONNECT EACH ACCESSIBLE STORY.

1104.5.7 ACCESSIBLE ENTRANCES:
DWELLING UNITS: REQUIRED AT EACH DWELLING UNIT ENTRANCE.

1107 DWELLING UNITS AND SLEEPING UNITS:
1107.1 TYPE B UNITS ARE REQUIRED AND SHALL COMPLY WITH SECTIONS 404.2.2 AND 404.2.3 OF ICC A117.1.

1107.6.2.3 GROUP R-2: TYPE B UNITS ARE REQUIRED IN ACCORDANCE WITH ICC A117.1-2017 CHAPTER 11, SECTION 1104 TYPE B UNITS.

FE 2–A FOR CLASS A PORTABLE FIRE EXTINGUISHER IN ACCORDANCE WITH NFPA 10 ⚠1

ONE HOUR RATED FIRE BARRIER

ONE HOUR RATED FIRE PARTITION

PROJECT DATA: LIBERTY PLAZA SUITES

1. PROJECT ADDRESS: 500 COMMERCE STREET, HAWTHORNE, NY 10532 TOWN OF MT. PLEASANT

2. PROJECT DESCRIPTION:
NEW THREE–STORY MULTIFAMILY BUILDING WITH ENCLOSED PARKING ON FIRST LEVEL, 16 TOTAL DWELLING UNITS (8 PER FLOOR ON FLOORS 2 AND 3); ADDITIONAL EXTERIOR PARKING OUTSIDE MAIN BUILDING ENTRANCE, SITE LIGHTING, OPEN SPACE AREAS AT GRADE, AND PROPOSED STREETSCAPE AT BUILDING EXTERIOR TO ALIGN WITH THE TOWN OF MT. PLEASANT'S MASTER PLAN.

3. MAP / BLOCK / LOT: SHEET 112.06, BLOCK 1, LOT 46

4. JURISDICTION: TOWN OF MOUNT PLEASANT, WESTCHESTER COUNTY, NY

5. ZONING: C–NR

6. CODE:
ALL WORK SHALL CONFORM TO ALL APPLICABLE GOVERNING CODES, INCLUDING BUT NOT LIMITED TO THE FOLLOWING,

2020 BUILDING CODE OF NEW YORK STATE
2020 PLUMBING CODE OF NEW YORK STATE
2020 MECHANICAL CODE OF NEW YORK STATE
2020 FUEL GAS CODE OF NEW YORK STATE
2020 FIRE CODE OF NEW YORK STATE
2020 ENERGY CONSERVATION CONSTRUCTION CODE OF NEW YORK STATE

2010 ADA STANDARDS FOR ACCESSIBLE DESIGN
HUD FHA REGULATIONS AND GUIDELINES/ICC A117.1–2017

TOWN OF MT. PLEASANT, NY ADOPTED CODES WITH CURRENT AMENDMENTS DESIGN CRITERIA FOR THE TOWN OF MT. PLEASANT

7. SITE AREA: EXISTING PARCEL: ± 30,000 S.F. ± 0.69 ACRES

8. PROPOSED PROJECT AREA:

FIRST FLOOR: PARKING GARAGE, ENCLOSED, S–2	± 12,554 S.F.
SECOND FLOOR: MULTISTORY DWELLING UNITS, R–2	± 12,338 S.F.
THIRD FLOOR: MULTISTORY DWELLING UNITS, R–2	± 12,338 S.F.
TOTAL FLOOR AREA:	± 37,230 S.F.

302.1 9. PROPOSED USE / OCCUPANCY: R–2 – MULTISTORY DWELLING UNITS; S–2 – PARKING GARAGE, ENCLOSED

602.1 10. CONSTRUCTION CLASSIFICATION: TYPE II–B FULLY SPRINKLERED

TABLE 506.2 FOOTNOTE SM: BUILDINGS TWO OR MORE STORIES ABOVE GRADE PLANE EQUIPPED THROUGHOUT WITH AN AUTOMATIC SPRINKLER SYSTEM IN ACCORDANCE WITH SECTION 903.1.1.
S13R: BUILDINGS EQUIPPED THROUGHOUT WITH AN AUTOMATIC SPRINKLER SYSTEM IN ACCORDANCE WITH SECTION 903.1.2.*
⚠1 *NOTE: BY DESIGN, THE BUILDING IS EQUIPPED THROUGHOUT WITH AN NFPA 13 AUTOMATIC SPRINKLER SYSTEM IN ACCORDANCE WITH SECTION 903.1.1.

11. PROPOSED BUILDING HEIGHT : (VARIANCE GRANTED, TOWN OF MT. PLEASANT) ALLOWABLE STORIES: 2.5 ACTUAL STORIES: 3
ALLOWABLE HEIGHT: 35' ACTUAL HEIGHT: 46.25'

12. LOT COVERAGE: SEE SITE PLAN

13. PARKING: SEE SITE PLAN

506.2.4 MIXED–OCCUPANCY, MULTISTORY BUILDING (REFERENCE 508.4 SEPARATED OCCUPANCIES)

506.2.3 14. ALLOWABLE AREA:
TABLE 506.2. OCCUPANCY CLASSIFICATION S–2: TYPE II–B/SM ⚠1 78,000 SF
OCCUPANCY CLASSIFICATION R–2: TYPE II–B/SM ⚠1 48,000 SF

506.3. FRONTAGE INCREASE:
506.3.1 BUILDING SHALL HAVE MINIMUM 25% OF THE PERIMETER ON A PUBLIC WAY PER 2020 BC NYS 506.3.1 = O.K.

506.3.2 OPEN / FRONTAGE WITH MINIMUM 20' SIDES:

FRONT (181' L):	49' OPEN–USE 30' MAXIMUM ALLOWED
SIDE NORTH (76' L):	41' OPEN–USE 30' MAXIMUM ALLOWED
REAR (181' L):	N/A–NOT USED
SIDE SOUTH (70' L) :	46' OPEN–USE 30' MAXIMUM ALLOWED
BUILDING PERIMETER :	181' + 76' + 181' + 70' = 508'

AMOUNT OF INCREASE:

$$\text{If} = \left[\frac{F}{P} - 0.25\right]\frac{W}{30} \quad \text{If} = \left[\frac{327'}{508'} - 0.25\right]\frac{30}{30} \quad \text{If} = .39$$

506.3.3 EQUATION 5-5 ALLOWABLE AREA WITH FRONTAGE INCREASE/MIXED OCCUPANCY:

OCCUPANCY CLASSIFICATION S–2: TYPE II–B/SM
A ALLOWABLE = At + (NS X If)

506.2.4 EQUATION 5-3
A = 78,000 + (26,000 X .39)
A = 78,000 + 10,140
A = 88,140 TOTAL ALLOWABLE CALCULATED AREA/FLOOR
88,140 S.F. > 12,554 S.F. = O.K.

OCCUPANCY CLASSIFICATION R–2: TYPE II–B/SM ⚠1
A ALLOWABLE = At + (NS X If)
A = 48,000 + (48,000 X .39)
A = 48,000 + 18,720
A = 66,720 TOTAL ALLOWABLE CALCULATED AREA/FLOOR ⚠1
66,720 S.F. > 12,338 S.F. = O.K.

504.2 15. MIXED OCCUPANCY: ALLOWABLE PERMITTED PER OCCUPANCY

TABLE 504.4 ALLOWABLE NUMBER OF STORIES ABOVE GRADE PLANE:
OCCUPANCY CLASSIFICATION S–2: TYPE II–B/SM 4 STORIES > 1 STORY = O.K.
OCCUPANCY CLASSIFICATION R–2: TYPE II–B/SM 5 STORIES > 2 STORIES = O.K. ⚠1

TABLE 504.3 16. ALLOWABLE BUILDING HEIGHT ABOVE GRADE PLANE:
OCCUPANCY CLASSIFICATION S–2: TYPE II–B/S 75 FT*
OCCUPANCY CLASSIFICATION R–2: TYPE II–B/S 60 FT*

*HEIGHT/STORIES GOVERNED BY LOCAL VARIANCE GRANTED, TOWN OF MT. PLEASANT
ALLOWABLE STORIES: 2.5
ACTUAL STORIES: 3
ALLOWABLE HEIGHT: 35'
ACTUAL HEIGHT: 46.25'

LIBERTY PLAZA SUITES

500 COMMERCE STREET HAWTHORNE, NY 10532

ARCHITECT
dimovski architecture
59 Kensico Road, Thornwood, NY 10594
(914) 747.3500 | (914) 747.3588 fax
www.dimovskiarchitecture.com

STRUCTURAL ENGINEER
CHARLES A. MANGANARO CONSULTING ENGINEERS
A PROFESSIONAL CORPORATION
303 SOUTH BROADWAY, SUITE 223, TARRYTOWN, NY 10591–5488
SHAILESH R. NAIK, P.E.
NEW YORK LICENSE No. 072797-1

MEP ENGINEER
QLA Consulting Engineers
50 Broadway, Hawthorne, NY 10532, 914.747.3500
8 West 38th Street, Suite 1001, New York, NY 10018, 646.848.4110
qlaca.com

NO.	REVISION/ISSUE	DATE
3	ISSUE FOR DOB COMMENT ⚠1	04/26/2021
2	ISSUE FOR PRICING	03/16/2021
1	ISSUE FOR PERMIT	03/12/2021

SEAL
REGISTERED ARCHITECT JULIETTE DIMOVSKI 032761 STATE OF NEW YORK

PROJECT
LIBERTY PLAZA SUITES
500 COMMERCE ST. TOWN OF MT. PLEASANT, NY

DATE:	AUGUST 12, 2020
PROJECT NO:	DA 2034
DRAWN BY:	YK
CHECKED BY:	PD/SGD
SCALE:	AS NOTED

DRAWING TITLE
CODE ANALYSIS

SHEET NO.
A-001

CHAPTER 3: BUILDING BLOCKS

304.3.1| New buildings and facilities.
In new buildings and facilities, the turning space shall be a circular space with a 67-inch (1700 mm) minimum diameter.

304.3.1| Overlap.
Turning spaces shall be permitted to include knee and toe clearance complying with Section 306. Where the turning space includes knee and toe clearances under an obstruction, the overlap shall comply with all of the following:

1. The depth of the overlap shall not be more than 19 inches (255 mm), and the depth shall not exceed the depth of the knee and toe clearances provided.
2. The overlap shall be permitted only within the turning circle area shown shaded in Figure 304.3.1.

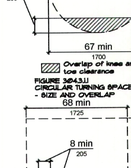

FIGURE 304.3.1|
CIRCULAR TURNING SPACE - NEW BUILDINGS - SIZE AND OVERLAP

304.3.2 T-Shaped space.

304.3.2.1 New buildings and facilities.
In new buildings and facilities, the turning space shall be a T-Shaped space complying with one of the following:

1. A T-Shaped space, clear of obstruction, that fits within an area 68 inches (1725 mm) side and 64 inches (1625 mm) deep, with two arms and one base that are all 36 inches (915 mm) minimum in width. Each arm shall extend 16 inches (405 mm) minimum from each side of the base located opposite the other, and the base shall extend 24 inches (610 mm) minimum from the arm. At the intersection of each arm and base, the interior corners shall be chamfered for 8 inches (205 mm) minimum along both the arm and along the base.

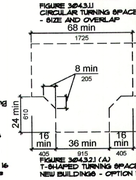

FIGURE 304.3.2.1(A)
T-SHAPED TURNING SPACE NEW BUILDINGS - OPTION 1

2. A T-Shaped space, clear of obstruction, that fits within an area 64 inches (1625 mm) side and 64 inches (1625 mm) deep, with two arms and a base 42 inches (1065 mm) minimum in width. Each arm shall extend 11 inches (280 mm) minimum from each side of the base, located opposite the other, and the base shall extend 22 inches (560 mm) minimum from each arm.

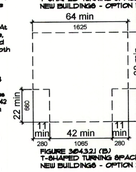

FIGURE 304.3.2.1(B)
T-SHAPED TURNING SPACE NEW BUILDINGS - OPTION 2

3. A T-Shaped space, clear of obstruction, 64 inches (1625 mm) wide and 68 inches (1725 mm) deep, with two arms and one base 40 inches (1015 mm) minimum in width. Each arm shall extend 12 inches (305 mm) minimum from each side of the base and the base shall extend 28 inches (1140 mm) minimum from each arm.

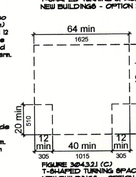

FIGURE 304.3.2.1(C)
T-SHAPED TURNING SPACE NEW BUILDINGS - OPTION 3

304.3.2.1| Overlap.
Turning spaces shall be permitted to include knee and toe clearance complying with Section 306 at either the base or one arm. For Option1, the base or arm is the portion beyond the chamfer.

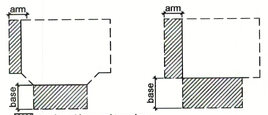

FIGURE 304.3.2.1|
T-SHAPED TURNING SPACE NEW BUILDINGS - OVERLAP

305.3.1| New buildings and facilities.
In new buildings and facilities, the clear floor space shall be 52 inches (1320 mm) minimum in length and 36 inches (760 mm) minimum in width.

FIGURE 305.3.1|
SIZE OF CLEAR FLOOR SPACE - NEW BUILDINGS

305.3.1| Parallel approach. Where a clear floor space is positioned for a parallel approach, the alcove shall be 60 inches (1525 mm) minimum in width where the depth exceeds 15 inches (380 mm)

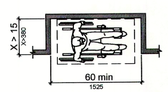

FIGURE 305.3.1|
MANEUVERING CLEARANCE IN AN ALCOVE PARALLEL APPROACH

305.3 Position. Unless otherwise specified, clear floor spaces shall be positioned for either forward or parallel approach to an element.

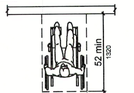

FIGURE 305.3(A)
POSITION OF CLEAR FLOOR SPACE - FORWARD

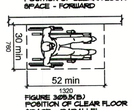

FIGURE 305.3(B)
POSITION OF CLEAR FLOOR SPACE - PARALLEL

305.3.2 Forward approach. Where a clear floor space is positioned for a forward approach, the alcove shall be 36 inches (915 mm) minimum in width where the depth exceeds 24 inches (610 mm)

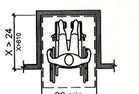

FIGURE 305.3.2|
MANEUVERING CLEARANCE IN AN ALCOVE FORWARD APPROACH

306.2 Toe clearance

306.2.1 General. Space beneath an element between the floor and 9 inches (230 mm) above the floor shall be considered toe clearance and shall comply with Section 306.2

306.2.2 Maximum depth. Toe clearance shall be permitted to extend 25 inches (635 mm) maximum under an element.

306.2.3 Minimum depth. Where toe clearance is required at an element as part of a clear floor space complying with Section 305, the toe clearance shall extend 17 inches (430 mm) minimum beneath the element.

306.2.4 Additional clearance. Space extending greater than 6 inches (150 mm) beyond the available knee clearance at 9 inches (230 mm) above the floor shall not be considered toe clearance.

306.2.5 Width. Toe clearance shall be 30 inches (760 mm) minimum in width.

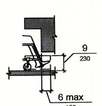

FIGURE 306.2 (A)
TOE CLEARANCE - ELEVATION

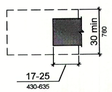

FIGURE 306.2 (B)
TOE CLEARANCE - PLAN

306.3 Knee clearance.

306.3.2 Maximum depth. Knee clearance shall be permitted to extend 25 inches (635 mm) maximum under an element at 9 inches (230 mm) above the floor

306.3.3 Minimum depth. Where knee clearance is required beneath an element as part of a clear floor space complying with Section 305, the knee clearance shall be 11 inches (280 mm) minimum in depth at 9 inches (230 mm) above the floor, and 8 inches (205 mm) minimum in depth at 27 inches (685 mm) above the floor.

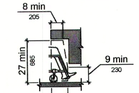

FIGURE 306.3 (A)
KNEE CLEARANCE - ELEVATION

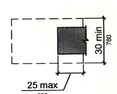

FIGURE 306.3 (B)
KNEE CLEARANCE - PLAN

307 Protruding Objects

307.2 Protrusion Limits. Objects with leading edges more than 27 inches (685 mm) and not more than 80 inches (2030 mm) above the floor shall protrude 4 inches (100 mm) maximum horizontally into the circulation path.

EXCEPTION: Handrails shall be permitted to protrude 4 1/2 inches (115 mm) maximum.

307.3 Post-Mounted Objects. Objects on posts or pylons shall permitted to overhang 4 inches (100 mm) maximum where more than 27 inches (685 mm) and not more than 80 inches (2030 mm) above the floor. Objects on multiple posts or pylons where the clear distance between posts or pylons is greater than 12 inches (305 mm) shall have the lowest edge of such object either 27 inches (685 mm) maximum or 80 inches (2030 mm) minimum above the floor.

Exception: Sloping portions of handrails between the top and bottom riser of stairs and above the ramp run shall not be required to comply with this section.

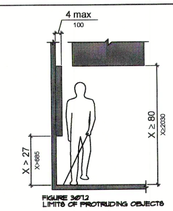

FIGURE 307.2
LIMITS OF PROTRUDING OBJECTS

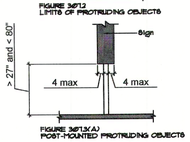

FIGURE 307.3(A)
POST-MOUNTED PROTRUDING OBJECTS

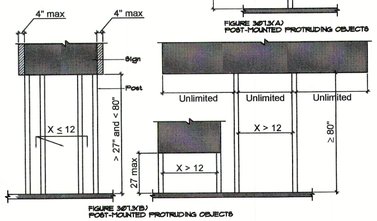

FIGURE 307.3(B)
POST-MOUNTED PROTRUDING OBJECTS

307.4 vertical clearance. vertical clearance shall be 80 inches (2030 mm) minimum. Rails or other barriers shall be provided where the vertical clearance is less than 80 inches (2030 mm). The leading edge of such rails or barrier shall be located 27 inches (685 mm) maximum above the floor.

EXCEPTION: Door closers and door stops shall be permitted to be 78 inches (1980 mm) minimum above the floor.

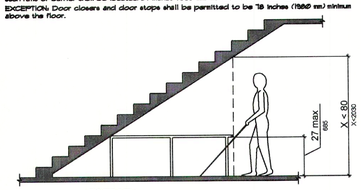

FIGURE 307.4
REDUCED VERTICAL CLEARANCE

308.2 Forward Reach.

308.2.1 Unobstructed. Where a forward reach is unobstructed, the high forward reach shall be 48 inches (1220 mm) maximum and the low forward reach shall be 15 inches (380 mm) minimum above the floor.

308.2.2 Obstructed High Reach. Where a high forward reach is over an obstruction, the clear floor space complying with Section 305 and knee and toe clearance complying with Section 306 shall extend beneath the element for a distance not less than the required reach depth over the obstruction. The high forward reach shall be 48 inches (1220 mm) maximum above the floor where the reach depth over the obstruction is 20 inches (510 mm) maximum. The high forward reach shall be 44 inches (1120 mm) maximum above the floor where the reach depth over the obstruction is greater than 20 inches (510 mm) and not more than 25 inches (635 mm) maximum.

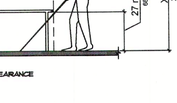

FIGURE 308.2.1
UNOBSTRUCTED FORWARD REACH

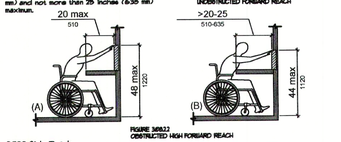

FIGURE 308.2.2
OBSTRUCTED HIGH FORWARD REACH

308.3 Side Reach.

308.3.1 Unobstructed. Where a clear floor space complying with Section 305 allows a parallel approach to an element and the edge of the clear floor space is 10 inches (255 mm) maximum from the element, the high side reach shall be 48 inches (1220 mm) maximum and the low side reach shall be 15 inches (380 mm) minimum above the floor.

Exception:
1. Existing elements that aranot altered shall be permitted at 54 inches (1370 mm) maximum above the floor.
2.Operable parts on fuel dispensers installed on existing curbs shall be permitted at 54 inches (1370 mm) maximum above the floor.

308.3.2 Obstructed High Reach. Where a clear floor space complying with Section 305 allows a parallel approach to an element and the high side reach is over an obstruction, the height of the obstruction shall be 34 inches (865 mm) maximum above the floor and the depth of the obstruction shall be 24 inches (610 mm) maximum. The high side reach shall be 48 inches (1220 mm) maximum above the floor for a reach depth of 10 inches (255 mm) maximum. Where the reach depth exceeds 10 inches (255 mm), the high side reach shall be 46 inches (1170 mm) maximum above the floor for a reach depth of 24 inches (610 mm) maximum.

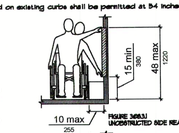

FIGURE 308.3.1
UNOBSTRUCTED SIDE REACH

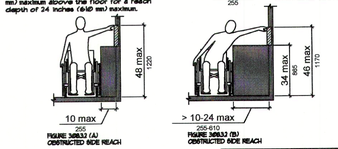

FIGURE 308.3.2 (A)
OBSTRUCTED SIDE REACH

FIGURE 308.3.2 (B)
OBSTRUCTED SIDE REACH

308 Operable Parts

308.1 General. Operable parts shall comply with Section 309.

EXCEPTIONS:
1. Receptacle outlets serving a dedicated use.
2. Where two or more receptacle outlets are provided in a kitchen above a length of countertop that is uninterrupted by a sink or appliance, one receptacle outlet shall not be required to comply with this section.
3. In a kitchen, where a clear floor space for a parallel approach cannot be located at a countertop in a corner between appliances, receptacle outlets over the countertop shall not be required to comply with this section provided that the countertop area does not exceed 9 square feet (0.8355 m²) maximum.

308.2 Clear Floor Space. A clear floor space complying with 305 shall be provided.

308.3 Height. Operable parts shall be placed within one or more of the reach ranges specified in 308.

308.4 Operation. Operable parts shall be operable with one hand and shall not require tight grasping, pinching, or twisting of the wrist. The force required to activate operable parts shall be 5 pounds (22.2 N) maximum.

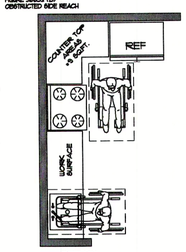

FIGURE 309.1
OPERABLE PARTS - EXCEPTION 3

CHAPTER 4: ACCESSIBLE ROUTES

402.2 Components. Accessible routes shall consist of one or more of the following components: walking surfaces with a running slope not steeper than 1:20, doors, and doorways, gates, ramps, curb ramps excluding the flared sides, blended transitions, elevators, and platform lifts. All components of an accessible route shall comply with the applicable portions of this standard.

403 Walking Surfaces

403.1 General. Walking surfaces that are a part of an accessible route shall comply with 403.

403.2 Floor Surface. Floor surfaces shall comply with Section 302.

403.3 Slope. The running slope of walking surfaces shall not be steeper than 1:20. The cross slope of a walking surface shall not be steeper than 1:48.

403.4 Changes in Level. Changes in level shall comply with 303.

403.5 Clear Width. The clear width of an accessible route shall comply with Section 403.5.1, 403.5.2, 403.5.3 or 403.5.4 as applicable.

403.5.1 General. The clear width of an interior accessible route shall be 36 inches (915 mm) minimum. The clear width of an exterior accessible route shall be 48 inches (1220 mm) minimum.

EXCEPTION:
1. In new buildings and facilities, the clear width shall be permitted to be reduced to 32 inches (815 mm) minimum for a length of 24 inches (610 mm) maximum provided the reduced-width segments are separated by segments that are 52 inches (1320 mm) minimum in length and 36 inches (915 mm) minimum in width.
2. In existing buildings and facilities, the clear width shall be permitted to be reduced to 32 inches (815 mm) minimum for a length of 24 inches (610 mm) maximum provided the reduced width segments are separated by segments that are 48 inches (1220 mm) minimum in length and 36 inches (915 mm) minimum in width.
3. The clear width of an exterior ramp where the slope between accessible passing areas shall be 36 inches (915 mm) minimum.
4. The clear width of an exterior ramp shall comply with Section 405.5.

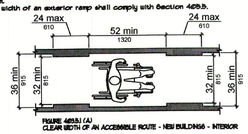

FIGURE 403.5.1(A)
CLEAR WIDTH OF AN ACCESSIBLE ROUTE - NEW BUILDING - INTERIOR

403.5.2 Clear Width at 180-degree turn.
403.5.2.1 New buildings and facilities. In new building and facilities, there an accessible route takes a 180 degree turn around an object that is equal to or greater than 52 inches (1320 mm) in width, the clear widths in the turn shall comply with Section 403.5.3.1. Where an accessible route takes a 180 degree turn around an object that is less than 52 inches (1320 mm) in width, the clear widths approaching the turn, during the turn and leaving the turn, shall be one of the following sets of dimensions:
1. Approaching widths 36 inches (915 mm) minimum, during width is 48 inches (1220 mm) minimum, and leaving width is 36 inches (915 mm) minimum.
2. Approaching width is 42 inches (1065 mm) minimum, during width is 48 inches (1220 mm) minimum, and leaving width is 42 inches (1065 mm) minimum.
3. Approaching width is 43 inches (1090 mm) during width is 43 inches (1090 mm) minimum, and leaving width is 43 inches (1090 mm) minimum.

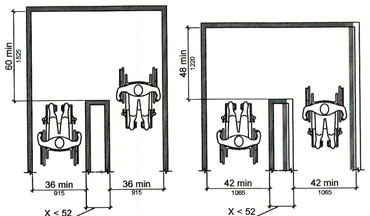

FIGURE 403.5.2(A)
CLEAR WIDTH AT 180 DEGREE TURN NEW BUILDINGS - OPTION 1

FIGURE 403.5.2(B)
CLEAR WIDTH AT 180 DEGREE TURN NEW BUILDINGS - OPTION 2

404 Doors, Doorways, and Gates

404.2.2 Clear Width. Doorways shall have a clear open width of 32 inches (815 mm) minimum. Clear opening width of doorways with swinging doors shall be measured between the face of door and stop, with the door open 90 degrees. Openings more than 24 inches (610 mm) in depth at doors and doorways without doors shall provide a clear opening width of 36 inches (915 mm) minimum. There shall be no projections into the clear opening width lower than 34 inches (865 mm) above the floor. Projections into the clear opening width between 34 inches (865 mm) and 80 inches (2030 mm) above the floor shall not exceed 4 inches (100 mm).

Exception:
1. Door closers and door stops shall be permitted to be 78 inches (1980 mm) minimum above the floor.
2. In alterations, a projection of 5/8 inch (16 mm) maximum into the required clear opening width shall be permitted for the latch side stop.

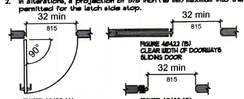

FIGURE 404.2.2 (A)
CLEAR WIDTH OF DOORWAYS HINGED DOOR

FIGURE 404.2.2 (B)
CLEAR WIDTH OF DOORWAYS SLIDING DOOR

FIGURE 404.2.2 (C)
CLEAR WIDTH OF DOORWAYS FOLDING DOOR

FIGURE 404.2.2 (D)
CLEAR WIDTH OF DOORWAYS WITHIN DOORS

404.2.3 Maneuvering clearances. Minimum maneuvering clearances at doors and gates shall comply with Section 404.2.3. Maneuvering clearances shall include the full clear opening width of the doorway and the required latch-side or hinge-side clearance.

404.2.3.1 Floor surface. The floor surface within the maneuvering clearances shall have a slope not steeper than 1:48 and shall comply with Section 302.

404.2.3.2 Swinging doors and gates. Swinging doors and gates shall have maneuvering clearances complying with Table 404.2.3.2

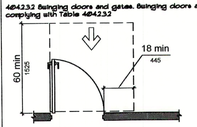

FIGURE 404.2.3.2 (A)
MANEUVERING CLEARANCE AT MANUAL SWINGING DOORS FRONT APPROACH - PULL SIDE

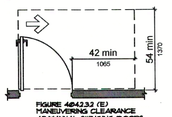

FIGURE 404.2.3.2 (E)
MANEUVERING CLEARANCE AT MANUAL SWINGING DOORS HINGE APPROACH - PULL SIDE

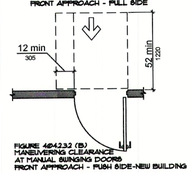

FIGURE 404.2.3.2 (B)
MANEUVERING CLEARANCE AT MANUAL SWINGING DOORS FRONT APPROACH - PUSH SIDE-NEW BUILDING

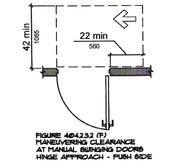

FIGURE 404.2.3.2 (F)
MANEUVERING CLEARANCE AT MANUAL SWINGING DOORS HINGE APPROACH - PUSH SIDE

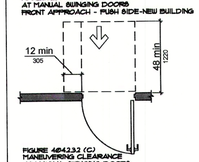

FIGURE 404.2.3.2 (C)
MANEUVERING CLEARANCE AT MANUAL SWINGING DOORS FRONT APPROACH - PUSH SIDE-EXISTING BUILDING

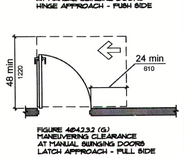

FIGURE 404.2.3.2 (G)
MANEUVERING CLEARANCE AT MANUAL SWINGING DOORS LATCH APPROACH - PULL SIDE

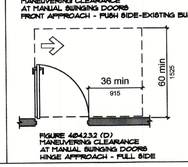

FIGURE 404.2.3.2 (D)
MANEUVERING CLEARANCE AT MANUAL SWINGING DOORS HINGE APPROACH - PULL SIDE

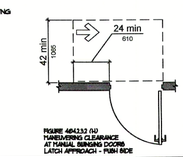

FIGURE 404.2.3.2 (H)
MANEUVERING CLEARANCE AT MANUAL SWINGING DOORS LATCH APPROACH - PUSH SIDE

404.2.3.3 Sliding and folding doors. Sliding doors and folding doors shall have maneuvering clearances complying with Table 404.2.3.3

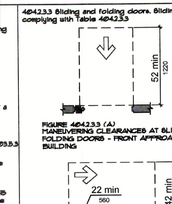

FIGURE 404.2.3.3 (A)
MANEUVERING CLEARANCES AT SLIDING AND FOLDING DOORS - FRONT APPROACH - NEW BUILDING

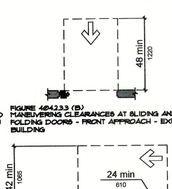

FIGURE 404.2.3.3 (B)
MANEUVERING CLEARANCES AT SLIDING AND FOLDING DOORS - FRONT APPROACH - EXISTING BUILDING

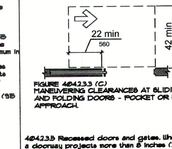

FIGURE 404.2.3.3 (C)
MANEUVERING CLEARANCES AT SLIDING AND FOLDING DOORS - POCKET OR HINGE APPROACH

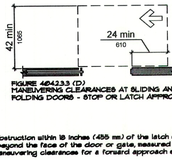

FIGURE 404.2.3.3 (D)
MANEUVERING CLEARANCES AT SLIDING AND FOLDING DOORS - STOP OR LATCH APPROACH

404.2.3.5 Recessed doors and gates. Where any obstruction within 18 inches (455 mm) of the latch side of a doorway projects more than 8 inches (205 mm) beyond the face of the door or gate, measured perpendicular to the face of the door or gate, sensuvering clearances for a forward approach shall be provided.

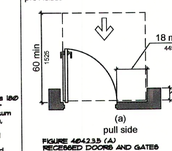

FIGURE 404.2.3.5 (A)
RECESSED DOORS AND GATES - NEW BUILDINGS PULL SIDE

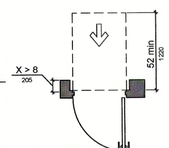

FIGURE 404.2.3.5 (B)
RECESSED DOORS AND GATES - NEW BUILDINGS PUSH SIDE

407 Elevators

407.2.2 Visible Signals. Visible signal fixtures shall be centered at 72 inches (1830 mm) minimum above the floor. The visible signal elements shall be 2 1/2 inches (64 mm) minimum between the uppermost and lowest edges of the illuminated shape measured vertically. Signals shall be visible from the floor area adjacent to the hall call button.

FIGURE 407.2.2.2
ELEVATOR VISIBLE SIGNALS SIZE OF SIGNALS

407.2.3.1 Floor Designation. Floor designations shall be provided in raised characters and braille complying with Section 1253 and 1254. Raised characters shall be 2 inches (51 mm) minimum in height. Floor designations shall be located on both jambs of elevator hoistway entrances. A raised star shall be provided on both jambs at the main entry level.

FIGURE 404.2.3.5 (C)
RECESSED DOORS AND GATES - NEW BUILDINGS PUSH SIDE - DOOR PROVIDED WITH BOTH CLOSER AND LATCH

FIGURE 407.2.3.1
FLOOR DESIGNATION

407.2.3.2 Car Designations. Destination-oriented elevators shall provide car identification in raised characters and braille complying with Section 1253 and 1254. Raised characters shall be 2 inches (51 mm) minimum in height. Car identifications shall be located on both jambs of the hoistway immediately below the floor designation.

FIGURE 407.2.3.2
DESTINATION-ORIENTED ELEVATOR CAR IDENTIFICATION

407.4.1 Inside dimensions. Inside dimensions of elevator cars shall comply with Table 407.4.1.

Exception: Existing elevator car configurations that provide a clear floor area of 16 square feet (15 M²) minimum, and provide a clear inside dimension of 36 inches (915 mm) minimum in width and 54 inches (1370 mm) minimum in depth, shall be permitted.

FIGURE 407.4.1 (B)
INSIDE DIMENSIONS OF ELEVATOR CARS SIDE (OFF-CENTERED DOOR) LOCATION

SECTION 1804 TYPE B UNITS

1804.1 General. Type B units shall comply with Section 1804.

1804.1.1 Clear floor space. For Type B units, clear floor spaces shall be 48 inches (1220 mm) minimum in length and 36 inches (1165 mm) minimum in width.

1804.5 Operable parts. Lighting controls, electrical switches and receptacle outlets, environmental controls, electrical panelboards, and user controls for security or intercom systems shall comply with Sections 1405.3 and 1804.1.1.

Exceptions:
1. Receptacle outlets serving a dedicated use.
2. In a kitchen where two or more receptacle outlets are provided above a length of countertop that is uninterrupted by a sink or appliance, only one receptacle outlet shall be required to comply with this section.
3. In a kitchen where a clear floor space for a parallel approach cannot be located at a countertop in a corner between appliances, receptacle outlets over the countertop shall not be required to comply with this section provided that the countertop area does not exceed 9 square feet (0.835 m²) maximum.
4. Floor receptacle outlets.
5. HVAC diffusers.
6. Controls mounted on ceiling fans.
7. Controls or switches mounted on appliances.
8. Plumbing fixture controls.
9. Reset buttons and shut-offs serving appliances, piping and plumbing fixtures.
10. Where redundant controls other than light switches are provided for a single element, one control in each space shall not be required to comply with this section.
11. Within kitchens and bathrooms, lighting controls, electrical switches and receptacle outlets are permitted to be located over cabinets with countertops 36 inches (915 mm) maximum in height and 25 1/2" inches (650 mm) maximum in depth.

1804.5.3.1 Lavatory. A clear floor space positioned for a parallel approach shall be provided at a lavatory. The clear floor space shall be centered on the lavatory.

Exception: A lavatory complying with Sections 606.3, 606.4 and 1804.1 shall be permitted. Cabinetry shall be permitted under the lavatory provided the following criteria are met:
1. The cabinetry can be removed without removal or replacement of the lavatory, and
2. The floor finish extends under the cabinetry, and
3. The walls behind and surrounding the cabinetry are finished.

1804.5.3.1.2 Water closet. The water closet shall comply with Section 1804.5.3.1.2.

1804.5.3.1.2.1 Location. The centerline of the water closet shall be 16 inches (405 mm) minimum and 18 inches (455 mm) maximum from one side of the required clearance.

1804.5.3.1.2.2 Clearance. Clearance around the water closet shall comply with Sections 1804.5.3.1.2.2.1 through 1804.5.3.1.2.2.3.

Exception: Clearance complying with Sections 1804.5.3.1.2.4.2 through 1804.5.3.1.2.4.4.

1804.5.3.1.2.2.1 Clearance width. Clearance around the water closet shall be 48 inches (1220 mm) minimum in width, measured perpendicular from the side of the clearance that is 16 inches (405 mm) minimum and 18 inches (455 mm) maximum from the water closet centerline.

1804.5.3.1.2.2.2 Clearance depth. Clearance around the water closet shall be 56 inches (1420 mm) minimum in depth, measured perpendicular from the rear wall.

1804.5.3.1.2.2.3 Increased clearance depth at forward approach. Where a forward approach is provided, the clearance shall be 66 inches (1675 mm) minimum in depth, measured perpendicular from the rear wall.

1804.5.3.1.2.2.4 Clearance overlap. A vanity or other obstruction 24 inches (610 mm) maximum in depth, measured perpendicular from the rear wall, shall be permitted to overlap the required clearance, provided the width of the remaining clearance at the water closet is 33 inches (840 mm) minimum.

FIGURE 1804.5.3.1 (A)
CLEAR FLOOR SPACE FOR TYPE B UNITS

FIGURE 1804.5.3.1 (B)
REACH OVER A KITCHEN OR BATHROOM CABINET

FIGURE 1804.5.3.1 (C)
LAVATORY IN TYPE B UNITS - OPTION A BATHROOM

FIGURE 1804.5.3.1.2 (A)
CLEARANCE AT WATER CLOSETS IN TYPE B UNITS
WATER CLOSET LOCATION

FIGURE 1804.5.3.1.2 (B)
CLEARANCE AT WATER CLOSETS IN TYPE B UNITS
CLEARANCE WIDTH AND DEPTH

FIGURE 1804.5.3.1.2 (C)
CLEARANCE AT WATER CLOSETS IN TYPE B UNITS
INCREASED CLEARANCE DEPTH - FORWARD APPROACH

FIGURE 1804.5.3.1.2 (D)
CLEARANCE AT WATER CLOSETS IN TYPE B UNITS
CLEARANCE WITH LAVATORY OVERLAP

1804.5.3.1.3.2 Forward approach bathtubs. A clearance 60 inches (1525 mm) minimum in length and 48 inches (1220 mm) minimum in width shall be provided in front of bathtubs with a forward approach. A water closet and a lavatory shall be permitted in the clearance at one end of the bathtubs.

FIGURE 1804.5.3.1.3.2
FORWARD APPROACH BATHTUB IN TYPE B UNITS
OPTION A BATHROOM

1804.4.2 Kitchens. Kitchens shall comply with Section 1804.4.2

1804.4.2.1 Clearance. Clearance complying with Section 1804.4.2.1 shall be provided.

1804.4.2.1.1 Minimum clearance. Clearance between all opposing base cabinets, countertops, appliances, or walls within kitchen work areas shall be 48 inches (1825 mm) minimum.

1804.4.2.1.2 U-shaped kitchens. In kitchens with counters, appliances or cabinets on three contiguous sides, clearance between all opposing base cabinets, countertops, appliances, or walls within kitchen work areas shall be 840 inches (1525 mm) minimum.
Exception: U-shaped kitchens with an island complying with Section 1804.4.2.1.1.

FIGURE 1804.5.2.1 (A)
MINIMUM CLEARANCE IN TYPE B UNITS

FIGURE 1804.5.2.1 (B)
MINIMUM CLEARANCE IN TYPE B UNITS

FIGURE 1804.5.2.1 (C)
U-SHAPED KITCHEN CLEARANCE IN TYPE B UNITS

1802.2 Vehicle Spaces. Car parking spaces shall be 96 inches (2440 mm) wide minimum in width. Van parking spaces shall be 132 inches (3350 mm) minimum in width.

EXCEPTION: Where the adjacent access aisle is 96 inches (2440 mm) minimum in width. Van parking spaces shall be 96 inches (2440 mm) minimum in width.

1802.3 Car and van parking spaces shall be marked to define the width. Where parking spaces are marked with lines, the width measurements of parking spaces and adjacent access aisles shall be made from the centerline of the markings.

Exception: Where parking spaces or access aisles are not adjacent to another parking space or access aisle, measurements shall be permitted to include the full width of the line defining the parking space or access aisle.

1802.4 Access Aisle. Car and van parking spaces shall have an adjacent access aisle complying with Section 1802.4

1802.4.1 Location. Access aisles shall adjoin an accessible route. Two parking spaces shall be permitted to share a common access aisle. Access aisles shall not overlap with the vehicular way. Parking spaces shall be permitted to have access aisles placed on either side of the car or van parking space. Van parking spaces that are angled shall have access aisles located on the passenger side of the parking space.

1802.4.2 Width. Access aisles serving car and van parking spaces shall be 60 inches (1525 mm) minimum in width.

1802.4.3 Length. Access aisles extend the full length of the parking spaces they serve.

1802.4.4 Marking. Access aisles shall be marked so as to discourage parking in them. Where access aisles are marked with lines, the width measurements of access aisles and adjacent parking spaces shall be made from the centerline of the markings.

Exception: Where access aisles or parking spaces are not adjacent to another access aisle or parking space, measurements shall be permitted to include the full width of the line defining the access aisle or parking space.

FIGURE 1802.2 (A)
VEHICLE PARKING SPACE SIZE

FIGURE 1802.2 (B)
VEHICLE PARKING SIZE EXCEPTION

FIGURE 1802.4
PARKING SPACE ACCESS AISLE

LIBERTY PLAZA SUITES
500 COMMERCE STREET
HAWTHORNE, NY 10532

ARCHITECT
dimovskiarchitecture
59 Kensico Road, Thornwood, NY 10594
(914) 747-3500 | (914) 747-3588 fax
www.dimovskiarchitecture.com

STRUCTURAL ENGINEER
CHARLES A. MANGANARO
CONSULTING ENGINEERS
A PROFESSIONAL CORPORATION
303 SOUTH BROADWAY, SUITE 223, TARRYTOWN, NY 10591-5488
SHAILESH R. NAIK, P.E.

CHAPTER 3: BUILDING BLOCKS

304.3.1 New buildings and facilities.
In new buildings and facilities, the turning space shall be a circular space with a 67-inch (1700 mm) minimum diameter.

304.3.1.1 Overlap.
Turning spaces shall be permitted to include knee and toe clearance complying with Section 306. Where the turning space includes knee and toe clearances under an obstruction, the overlap shall comply with all of the following:

1. The depth of the overlap shall not be more than 10 inches (255 mm), and
2. The depth shall not exceed the depth of the knee and toe clearances provided, and
3. The overlap shall be permitted only within the turning circle area shown shaded in Figure 304.3.1

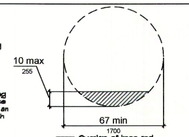

FIGURE 304.3.1
CIRCULAR TURNING SPACE - NEW BUILDINGS - SIZE AND OVERLAP

304.3.2 T-Shaped space.
304.3.2.1 New buildings and facilities.
In new buildings and facilities, the turning space shall be a T-Shaped space complying with one of the following:

1. A T-Shaped space, clear of obstruction, that fits within an area 68 inches (1725 mm) wide and 68 inches (1725 mm) deep, with two arms and one base that are all 36 inches (915 mm) minimum in width. Each arm shall extend 16 inches (405 mm) minimum from each side of the base located opposite the other, and the base shall extend 24 inches (610 mm) minimum from the arms. At the intersection of each arm and base, the interior corners shall be chamfered for 8 inches (205 mm) minimum along both the arm and along the base.

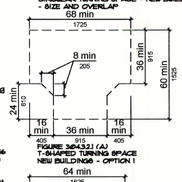

FIGURE 304.3.2.1 (A)
T-SHAPED TURNING SPACE
NEW BUILDINGS - OPTION 1

2. A T-Shaped space, clear of obstruction, that fits within an area 64 inches (1625 mm) wide and 64 inches (1625 mm) deep, with two arms and one base that are all 36 inches (965 mm) minimum in width and a base 42 inches (1065 mm) minimum in width. Each arm shall extend 11 inches (280 mm) minimum from each side of the base, located opposite the other, and the base shall extend 22 inches (560 mm) minimum from each arm.

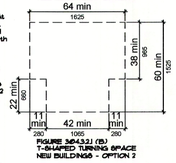

FIGURE 304.3.2.1 (B)
T-SHAPED TURNING SPACE
NEW BUILDINGS - OPTION 2

3. A T-Shaped space, clear of obstruction, 64 inches (1625 mm) wide and 64 inches (1625 mm) deep, with two arms and one base 40 inches (1015 mm) minimum in width. Each arm shall extend 12 inches (305 mm) minimum from each side of the base and the base shall extend 20 inches (510 mm) minimum from each arm.

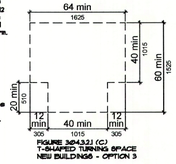

FIGURE 304.3.2.1 (C)
T-SHAPED TURNING SPACE
NEW BUILDINGS - OPTION 3

304.3.2.1.1 Overlap.
Turning spaces shall be permitted to include knee and toe clearance complying with Section 306 of either the base or one arm. For Option1, the base or arm is the portion beyond the chamfer.

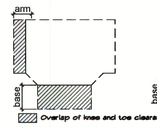

FIGURE 304.3.2.1.1
T-SHAPED TURNING SPACE NEW BUILDINGS - OVERLAP

305.3.1 New buildings and facilities.
In new buildings and facilities, the clear floor space shall be 30 inches (760 mm) minimum in length and 36 inches (760 mm) minimum in width.

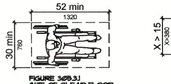

FIGURE 305.3.1
SIZE OF CLEAR FLOOR SPACE - NEW BUILDINGS

305.3.2 Position. Unless otherwise specified, clear floor spaces shall be positioned for either forward or parallel approach to an element.

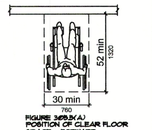

FIGURE 305.3(A)
POSITION OF CLEAR FLOOR SPACE - FORWARD

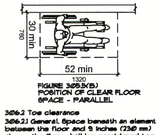

FIGURE 305.3(B)
POSITION OF CLEAR FLOOR SPACE - PARALLEL

306.2 Toe clearance
306.2.1 General. Space beneath an element between the floor and 9 inches (230 mm) above the floor shall be considered toe clearance and shall comply with Section 306.2.

306.2.2 Maximum depth. Toe clearance shall be permitted to extend 25 inches (635 mm) maximum under an element.

306.2.3 Minimum depth. Where toe clearance is required as an element as part of a clear floor space complying with Section 305, the toe clearance shall extend 17 inches (430 mm) minimum beneath the element.

306.2.4 Additional clearance. Space extending greater than 6 inches (150 mm) beyond the available knee clearance at 9 inches (230 mm) above the floor shall not be considered toe clearance.

306.2.5 Width. Toe clearance shall be 30 inches (760 mm) minimum in width.

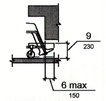

FIGURE 306.2 (A)
TOE CLEARANCE - ELEVATION

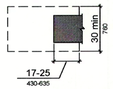

FIGURE 306.2 (B)
TOE CLEARANCE - PLAN

306.3.2 Maximum depth. Knee clearance shall be permitted to extend 25 inches (635 mm) maximum under an element at 9 inches (230 mm) above the floor

306.3.3 Minimum depth. Where knee clearance is required beneath an element as part of a clear floor space complying with Section 305, the knee clearance shall be 11 inches (280 mm) minimum in depth at 9 inches (230 mm) above the floor, and 8 inches (205 mm) minimum in depth at 27 inches (685 mm) above the floor.

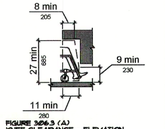

FIGURE 306.3 (A)
KNEE CLEARANCE - ELEVATION

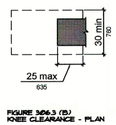

FIGURE 306.3 (B)
KNEE CLEARANCE - PLAN

307.1 Protruding Objects

307.2 Protrusion Limits. Objects with leading edges more than 27 inches (685 mm) and not more than 80 inches (2032 mm) above the floor shall protrude 4 inches (100 mm) maximum horizontally into the circulation path.

EXCEPTION: Handrails shall be permitted to protrude 4 1/2 inches (115 mm) maximum.

307.3 Post-Mounted Objects. Objects on posts or pylons shall permitted to overhang 12 inches (305 mm) maximum where more than 27 inches (685 mm) and not more than 80 inches (2032 mm) above the floor. Objects on multiple posts or pylons where the clear distance between posts or pylons is greater than 12 inches (305 mm) shall have the lowest edge of such object either 27 inches (685 mm) maximum or 80 inches (2032 mm) minimum above the floor.

Exception: Sloping portions of handrails between the top and bottom riser of stairs and above the ramp run shall not be required to comply with this section.

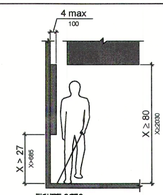

FIGURE 307.2
LIMITS OF PROTRUDING OBJECTS

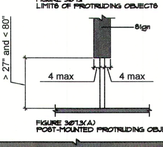

FIGURE 307.3(A)
POST-MOUNTED PROTRUDING OBJECTS

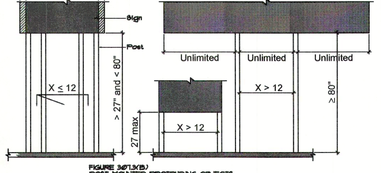

FIGURE 307.3(B)
POST-MOUNTED PROTRUDING OBJECTS

307.4 vertical clearance. vertical clearance shall be 80 inches (2032 mm) minimum. Rails or other barriers shall be provided where the vertical clearance is less than 80 inches (2032 mm). The leading edge of such rails or barrier shall be located 27 inches (685 mm) maximum above the floor.

EXCEPTION: Door closers and door stops shall be permitted to be 78 inches (1980 mm) minimum above the floor.

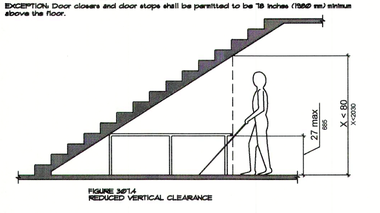

FIGURE 307.4
REDUCED VERTICAL CLEARANCE

308.2 Forward Reach.

308.2.1 Unobstructed. Where a forward reach is unobstructed, the high forward reach shall be 48 inches (1220 mm) maximum and the low forward reach shall be 15 inches (380 mm) minimum above the floor.

308.2.2 Obstructed High Reach. Where a high forward reach is over an obstruction, the clear floor space complying with Section 305 and knee and toe clearance complying with Section 306 shall extend beneath the element for a distance not less than the required reach depth over the obstruction. The high forward reach shall be 48 inches (1220 mm) maximum above the floor where the reach depth over the obstruction is 20 inches (510 mm) maximum. The high forward reach shall be 44 inches (1120 mm) maximum above the floor where the reach depth over the obstruction is greater than 20 inches (510 mm) and not more than 25 inches (635 mm) maximum.

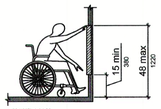

FIGURE 308.2.1
UNOBSTRUCTED FORWARD REACH

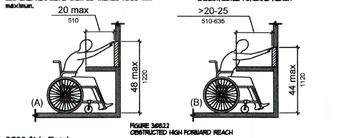

FIGURE 308.2.2
OBSTRUCTED HIGH FORWARD REACH

308.3 Side Reach.
308.3.1 Unobstructed. Where a clear floor space complying with Section 305 allows a parallel approach to an element and the edge of the clear floor space is 24 inches (255 mm) maximum from the element, the high side reach shall be 48 inches (1220 mm) maximum and the low side reach shall be 15 inches (380 mm) minimum above the floor.

Exception:
1. Existing elements that cannot altered shall be permitted at 54 inches (1370 mm) maximum above the floor.
2. Operable parts on fuel dispensers installed on existing curbs shall be permitted at 54 inches (1370 mm) maximum above the floor.

308.3.2 Obstructed High Reach. Where a clear floor space complying with Section 305 allows a parallel approach to an element and the high side reach is over an obstruction, the height of the obstruction shall be 34 inches (865 mm) maximum above the floor and the depth of the obstruction shall be 24 inches (610 mm) maximum. The high side reach shall be 48 inches (1220 mm) maximum above the floor for a reach depth of 10 inches (255 mm) maximum. Where the reach depth exceeds 10 inches (255 mm), the high side reach shall be 46 inches (1170 mm) maximum above the floor for a reach depth of 24 inches (610 mm) maximum.

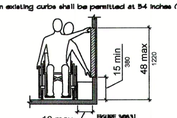

FIGURE 308.3.1
UNOBSTRUCTED SIDE REACH

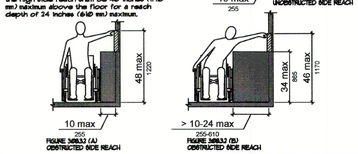

FIGURE 308.3.2 (A)
OBSTRUCTED SIDE REACH

FIGURE 308.3.2 (B)
OBSTRUCTED SIDE REACH

309 Operable Parts
309.1 General. Operable parts shall comply with Section 309.

EXCEPTIONS:
1. Receptacle outlets serving a dedicated use.
2. Where two or more receptacle outlets are provided in a kitchen above a length of countertop that is uninterrupted by a sink or appliance, one receptacle outlet shall not be required to comply with this section.
3. In a kitchen, where a clear floor space for a parallel approach cannot be located at a countertop in a corner between appliances, receptacle outlets over the countertop shall not be required to comply with this section provided that the countertop area does not exceed 9 square feet (0.835 m²) maximum.

309.2 Clear Floor Space. A clear floor space complying with 305 shall be provided.

309.3 Height. Operable parts shall be placed within one or more of the reach ranges specified in 308.

309.4 Operation. Operable parts shall be operable with one hand and shall not require tight grasping, pinching, or twisting of the wrist. The force required to activate operable parts shall be 5 pounds (22.2 N) maximum.

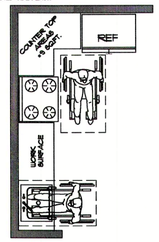

FIGURE 309.1
OPERABLE PARTS - EXCEPTION 3

CHAPTER 4: ACCESSIBLE ROUTES

402.2 Components. Accessible routes shall consist of one or sons of the following components: walking surfaces with a running slope not steeper than 1:20, doors, and doorways, gates, ramps, curb ramps excluding the flared sides, blended transitions, elevators, and platform lifts. All components of an accessible route shall comply with the applicable portions of this standard.

403 Walking Surfaces

403.1 General. Walking surfaces that are a part of an accessible route shall comply with 403.

403.2 Floor Surface. Floor surfaces shall comply with Section 302.

403.3 Slope. The running slope of walking surfaces shall not be steeper than 1:20. The cross slope of a walking surface shall not be steeper than 1:48.

403.4 Changes in Level. Changes in level shall comply with 303.

403.5 Clear Width. The clear width of an accessible route shall comply with Section 403.5.1, 403.5.2, 403.5.3 or 403.5.4 as applicable.

403.5.1 General. The clear width of an interior accessible route shall be 36 inches (915 mm) minimum. The clear width of an exterior accessible route shall be 48 inches (1220 mm) minimum.

EXCEPTION:
1. In new buildings and facilities, the clear width shall be permitted to be reduced to 32 inches (815 mm) minimum for a length of 24 inches (610 mm) maximum provided the reduced-width segments are separated by segments that are 52 inches (1320 mm) minimum in length and 36 inches (915 mm) minimum in width.
2. In existing buildings and facilities, the clear width shall be permitted to be reduced to 32 inches (815 mm) minimum for a length of 24 inches (610 mm) maximum provided the reduced-width segments are separated by segments that are 48 inches (1220 mm) minimum in length and 36 inches (915 mm) minimum in width.
3. The clear width of an exterior accessible route located within seating areas shall be 36 inches (915 mm) minimum.
4. The clear width of an exterior ramp shall comply with Section 405.5.

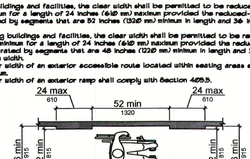

FIGURE 403.5 (A)
CLEAR WIDTH OF AN ACCESSIBLE ROUTE - NEW BUILDING - INTERIOR

403.5.2 Clear Width at 180-degree turn.
403.5.2.1 New buildings and facilities. In new building and facilities, where an accessible route makes a 180 degree turn around an object that is equal to or greater than 32 inches (1320 mm) in width, the clear width in the turn shall comply with Section 403.5.2.1. Where an accessible route makes a 180 degree turn around an object that is less than 32 inches (1320 mm) in width, the clear widths approaching the turn, during the turn and leaving the turn, shall be one of the following sets of dimensions:
1. Approaching width is 36 inches (915 mm) minimum, during width is 60 inches (1525 mm) minimum, and leaving width is 36 inches (915 mm) minimum.
2. Approaching width is 42 inches (1065 mm) minimum, during width is 48 inches (1220 mm) minimum, and leaving width is 42 inches (1065 mm) minimum.
3. Approaching width is 43 inches (1090 mm) during width is 43 inches (1090 mm) minimum, and leaving width is 43 inches (1090 mm) minimum.

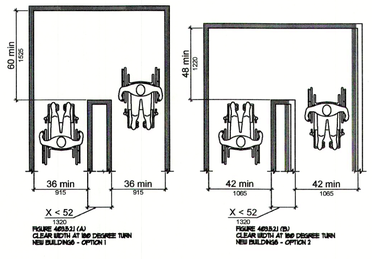

FIGURE 403.5.2 (A)
CLEAR WIDTH AT 180 DEGREE TURN
NEW BUILDINGS - OPTION 1

FIGURE 403.5.2 (B)
CLEAR WIDTH AT 180 DEGREE TURN
NEW BUILDINGS - OPTION 2

404 Doors, Doorways, and Gates
404.2.2 Clear Width. Doorways shall have a clear open width of 32 inches (815 mm) minimum. Clear opening width of doorways with swinging doors shall be measured between the face of door and stop, with the door open 90 degrees. Openings more than 24 inches (610 mm) in depth at doors and doorways without doors shall provide a clear opening width of 36 inches (915 mm) minimum. There shall be no projections into the clear opening width lower than 34 inches (865 mm) above the floor. Projections into the clear opening width between 34 inches (865 mm) and 80 inches (2030 mm) above the floor shall not exceed 4 inches (100 mm).

Exception:
1. Door closers and door stops shall be permitted to be 78 inches (1980 mm) minimum above the floor.
2. In alterations, a projection of 5/8 inch (16 mm) maximum into the required clear opening width shall be permitted for the latch side stop.

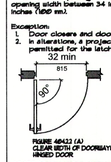

FIGURE 404.2.2 (A)
CLEAR WIDTH OF DOORWAYS HINGED DOOR

FIGURE 404.2.2 (B)
CLEAR WIDTH OF DOORWAYS FOLDING DOOR

FIGURE 404.2.2 (C)
CLEAR WIDTH OF DOORWAYS DOORWAYS WITHIN DOORS

404.2.3 Maneuvering clearances. Minimum maneuvering clearances at doors and gates shall comply with Section 404.2.3. Maneuvering clearances shall include the full clear opening width of the doorway and the required latch-side or hinge-side clearance.

404.2.3.1 Floor surface. The floor surface within the maneuvering clearances shall have a slope not steeper than 1:48 and shall comply with Section 302.

404.2.3.2 Swinging doors and gates. Swinging doors and gates shall have maneuvering clearances complying with Table 404.2.3.2

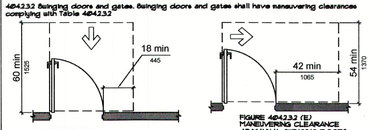

FIGURE 404.2.3.2 (A)
MANEUVERING CLEARANCE AT MANUAL SWINGING DOORS FRONT APPROACH - PULL SIDE

FIGURE 404.2.3.2 (E)
MANEUVERING CLEARANCE AT MANUAL SWINGING DOORS HINGE APPROACH - PULL SIDE

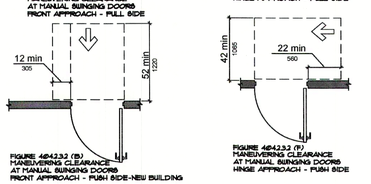

FIGURE 404.2.3.2 (B)
MANEUVERING CLEARANCE AT MANUAL SWINGING DOORS FRONT APPROACH - PUSH SIDE-NEW BUILDING

FIGURE 404.2.3.2 (F)
MANEUVERING CLEARANCE AT MANUAL SWINGING DOORS HINGE APPROACH - PUSH SIDE

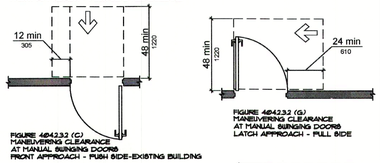

FIGURE 404.2.3.2 (C)
MANEUVERING CLEARANCE AT MANUAL SWINGING DOORS FRONT APPROACH - PUSH SIDE-EXISTING BUILDING

FIGURE 404.2.3.2 (G)
MANEUVERING CLEARANCE AT MANUAL SWINGING DOORS LATCH APPROACH - PULL SIDE

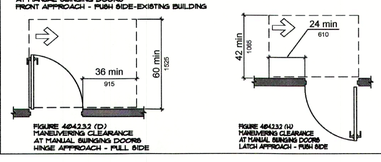

FIGURE 404.2.3.2 (D)
MANEUVERING CLEARANCE AT MANUAL SWINGING DOORS HINGE APPROACH - PULL SIDE

FIGURE 404.2.3.2 (H)
MANEUVERING CLEARANCE AT MANUAL SWINGING DOORS LATCH APPROACH - PUSH SIDE

404.2.3.3 Sliding and folding doors. Sliding doors and folding doors shall have maneuvering clearances complying with Table 404.2.3.3

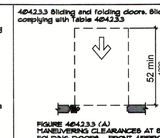

FIGURE 404.2.3.3 (A)
MANEUVERING CLEARANCES AT SLIDING AND FOLDING DOORS - FRONT APPROACH - NEW BUILDING

FIGURE 404.2.3.3 (B)
MANEUVERING CLEARANCES AT SLIDING AND FOLDING DOORS - FRONT APPROACH - EXISTING BUILDING

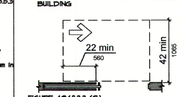

FIGURE 404.2.3.3 (C)
MANEUVERING CLEARANCES AT SLIDING AND FOLDING DOORS - POCKET OR HINGE APPROACH

FIGURE 404.2.3.3 (D)
MANEUVERING CLEARANCES AT SLIDING AND FOLDING DOORS - STOP OR LATCH APPROACH.

404.2.3.5 Recessed doors and gates. Where any obstruction within 18 inches (455 mm) of the latch side of a doorway projects more than 8 inches (205 mm) beyond the face of the door or gate, measured perpendicular to the face of the door or gate, maneuvering clearances for a forward approach shall be provided.

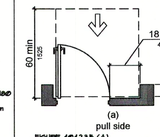

FIGURE 404.2.3.5 (A)
RECESSED DOORS AND GATES - NEW BUILDINGS PULL SIDE

FIGURE 404.2.3.5 (B)
RECESSED DOORS AND GATES - NEW BUILDINGS PUSH SIDE

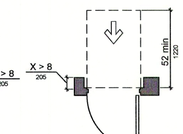

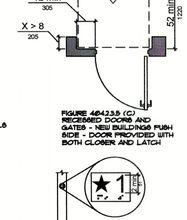

FIGURE 404.2.3.5 (C)
RECESSED DOORS AND GATES - NEW BUILDINGS PUSH SIDE - DOOR PROVIDED WITH BOTH CLOSER AND LATCH

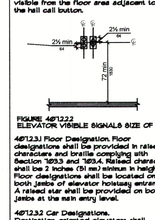

FIGURE 407.2.2
ELEVATOR VISIBLE SIGNALS SIZE OF SIGNALS

407 Elevators
407.2.2 Visible Signals. Visible signal fixtures shall be centered at 72 inches (1830 mm) minimum above the floor. The visible signal elements shall be 2 1/2 inches (64 mm) minimum between the uppermost and lowest edges of the illuminated shape measured vertically. Signals shall be visible from the floor area adjacent to the hall call button.

407.2.3 Floor Designation. Floor designations shall be provided in raised characters and braille complying with Section 703.3 and 703.4. Raised characters shall be 2 inches (51 mm) minimum in height. Floor designations shall be located on both jambs of elevator hoistway entrances. A raised star shall be provided on both jambs at the main entry level.

407.2.3.2 Car Designations. Destination-oriented elevators shall provide car identification in raised characters and braille complying with Section 703.3 and 703.4. Raised characters shall be 2 inches (51 mm) minimum in height. Car identifications shall be located on both jambs of the hoistway immediately below the floor designation.

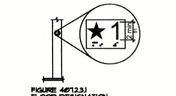

FIGURE 407.2.3.1
FLOOR DESIGNATION

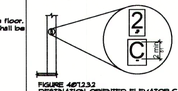

FIGURE 407.2.3.2
DESTINATION-ORIENTED ELEVATOR CAR IDENTIFICATION

407.4.1 Inside dimensions. Inside dimensions of elevator cars shall comply with Table 407.4.1.

Exception: Existing elevator car configurations that provide a clear floor area of 16 square feet (1.19 m²) minimum, and provide a clear inside dimension of 36 inches (915 mm) minimum in width and 54 inches (1370 mm) minimum in depth, shall be permitted.

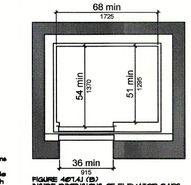

FIGURE 407.4.1 (B)
INSIDE DIMENSIONS OF ELEVATOR CARS SIDE (OFF-CENTERED DOOR) LOCATION

502.2 Vehicle Spaces. Car parking spaces shall be 96 inches (2440 mm) wide minimum in width. Van parking spaces shall be 132 inches (3350 mm) minimum in width.

Exception: Where the adjacent access aisle is 96 inches (2440 mm) minimum in width, Van parking spaces shall be 96 inches (2440 mm) minimum in width.

502.3 Car and van parking spaces shall be marked to define the width. Where parking spaces are marked with lines, the width measurements of parking spaces and adjacent access aisles shall be made from the centerline of the markings.

Exception: Where parking spaces or access aisles are not adjacent to another parking space or access aisle, measurements shall be permitted to include the full width of the line defining the parking space or access aisle.

502.4 Access Aisle. Car and van parking spaces shall have an adjacent access aisle complying with Section 502.4

502.4.1 Location. Access aisles shall adjoin an accessible route. Two parking spaces shall be permitted to share a common access aisle. Access aisles shall not overlap with the vehicular way. Parking spaces shall be permitted to have access aisles placed on either side of the car or van parking space. Van parking spaces that are angled shall have access aisles located on the passenger side of the parking space.

502.4.2 Width. Access aisles serving car and van parking spaces shall be 60 inches (1525 mm) minimum in width.

502.4.3 Length. Access aisles shall extend the full length of the parking spaces they serve.

502.4.4 Marking. Access aisles shall be marked so as to discourage parking in them. Where access aisles are marked with lines, the width measurements of access aisles and adjacent parking spaces shall be made from the centerline of the markings.

Exception: Where access aisles or parking spaces are not adjacent to another access aisle or parking space, measurements shall be permitted to include the full width of the line defining the access aisle or parking space.

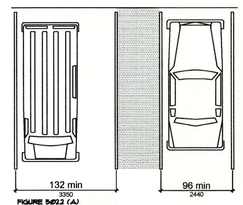

FIGURE 502.2 (A)
VEHICLE PARKING SPACE SIZE

FIGURE 502.2 (B)
VEHICLE PARKING SIZE EXCEPTION

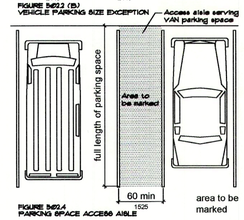

FIGURE 502.4
PARKING SPACE ACCESS AISLE

SECTION 1104 TYPE B UNITS

1104.1 General. Type B units shall comply with Section 1104.

1104.1.1 Clear floor space. For Type B units, clear floor spaces shall be 48 inches (1220 mm) minimum in length and 36 inches (760 mm) minimum in width.

1104.1.2 Operable parts. Lighting controls, electrical switches and receptacle outlets, environmental controls, electrical panelboards, and user controls for security or intercom systems shall comply with Sections 309.3 and 1104.1.1.

Exceptions:
1. Receptacle outlets serving a dedicated use.
2. In a kitchen where two or more receptacle outlets are provided above a length of countertop that is uninterrupted by a sink or appliance, only one receptacle outlet shall be required to comply with this section.
3. In a kitchen where a clear floor space for a parallel approach cannot be located at a countertop in a corner between appliances, receptacle outlets over the countertop shall not be required to comply with this section provided that the countertop area does not exceed 9 square feet (0.835 m²) maximum.
4. Floor receptacle outlets.
5. HVAC diffusers.
6. Controls mounted on ceiling fans.
7. Circuit breakers mounted on appliances.
8. Plumbing fixture controls.
9. Reset buttons and shut-offs serving appliances, piping and plumbing fixtures.
10. Where more than one receptacle outlet serves the same light switches are provided for a single element, one control in each space shall not be required to comply with this section.
11. Within kitchens and bathrooms, lighting controls, electrical switches and receptacle outlets are permitted to be located over cabinets with countertops 36 inches (915 mm) maximum in height and 29 1/2" inches (650 mm) maximum in depth.

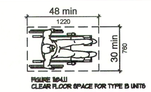

FIGURE 1104.1
CLEAR FLOOR SPACE FOR TYPE B UNITS

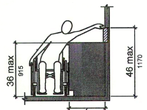

FIGURE 1104.1
REACH OVER A KITCHEN OR BATHROOM CABINET

1104.1.3.1 Lavatory. A clear floor space positioned for a parallel approach shall be provided at a lavatory. The clear floor space shall be centered on the lavatory.

Exception: At lavatory complying with Sections 606.3, 606.4 and 1804.1 shall be permitted. Cabinetry shall be permitted under the lavatory provided the following criteria are met.
1. The cabinetry can be removed without removal or replacement of the lavatory, and
2. The floor finish extends under the cabinetry, and
3. The walls behind and surrounding the cabinetry are finished.

1104.1.3.2 Water closet. The water closet shall comply with Section 1804.1.3.2.

1104.1.3.2.1 Location. The centerline of the water closet shall be 16 inches (405 mm) minimum and 18 inches (455 mm) maximum from one side of the required clearance.

1104.1.3.2.2 Clearance. Clearance around the water closet shall comply with Sections 1104.1.3.2.2.1 through 1104.1.3.2.2.3.

Exception: Clearance complying with Sections 1803.2.2.4.2 through 1803.2.2.4.4.

1104.1.3.2.2.1 Clearance width. Clearance around the water closet shall be 48 inches (1220 mm) minimum in width, measured perpendicular from the side of the clearance that is 16 inches (405 mm) minimum and 18 inches (455 mm) maximum from the water closet centerline.

1104.1.3.2.2.2 Clearance depth. Clearance around the water closet shall be 56 inches (1420 mm) minimum in depth, measured perpendicular from the rear wall.

1104.1.3.2.2.3 Increased clearance depth at forward approach. Where a forward approach is provided, the clearance shall be 66 inches (1675 mm) minimum in depth, measured perpendicular from the rear wall.

1104.1.3.2.2.4 Clearance overlap. A vanity or other obstruction 24 inches (610 mm) maximum in depth, measured perpendicular from the rear wall, shall be permitted to overlap the required clearance, provided the width of the remaining clearance at the water closet is 33 inches (840 mm) minimum.

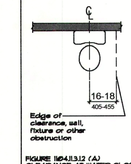

FIGURE 1104.1.3.1.2 (A)
CLEARANCE AT WATER CLOSETS IN TYPE B UNITS
WATER CLOSET LOCATION

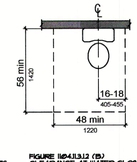

FIGURE 1104.1.3.1.2 (B)
CLEARANCE AT WATER CLOSETS IN TYPE B UNITS
CLEARANCE WIDTH AND DEPTH

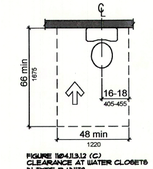

FIGURE 1104.1.3.1.2 (C)
CLEARANCE AT WATER CLOSETS IN TYPE B UNITS
INCREASED CLEARANCE DEPTH - FORWARD APPROACH

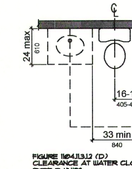

FIGURE 1104.1.3.1.2 (D)
CLEARANCE AT WATER CLOSETS IN TYPE B UNITS
CLEARANCE WITH LAVATORY OVERLAP

1104.1.3.1.3.2 Forward approach bathtub. A clearance 60 inches (1525 mm) minimum in length and 48 inches (1220 mm) minimum in width shall be provided in front of bathtubs with a forward approach. A water closet and a lavatory shall be permitted in the clearance at one end of the bathtube.

FIGURE 1104.1.3.1.3.2
FORWARD APPROACH BATHTUB IN TYPE B UNITS
OPTION A BATHROOM

1804.2 Kitchens. Kitchens shall comply with Section 1804.2

1804.2.1 Clearance. Clearance complying with Section 1804.2.1 shall be provided.

1804.2.1.1 Minimum clearance. Clearance between all opposing base cabinets, countertops, appliances, or walls within kitchen work areas shall be 48 inches (1815 mm) minimum.

1804.2.1.2 U-shaped kitchens. In kitchens with counters, appliances or cabinets on three contiguous sides, clearance between all opposing base cabinets, countertops, appliances, or walls within kitchen work areas shall be 60 inches (1525 mm) minimum.

Exception: U-shaped kitchens with an island complying with Section 1804.2.1.1.

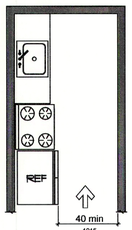

FIGURE 1804.2.1.1 (A)
MINIMUM CLEARANCE IN TYPE B UNITS

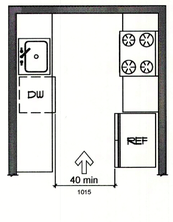

FIGURE 1804.2.1.1 (B)
MINIMUM CLEARANCE IN TYPE B UNITS

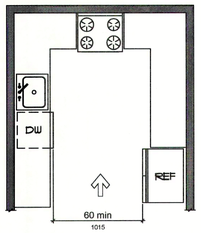

FIGURE 1804.2.1.2 (A)
U-SHAPED KITCHEN CLEARANCE IN TYPE B UNITS

LIBERTY PLAZA SUITES

500 COMMERCE STREET
HAWTHORNE, NY 10532

ARCHITECT
dimovski architecture LLC
59 Kensico Road, Thornwood, NY 10594
(914) 747-3500 | (914) 747-3588 fax
www.dimovskiarchitecture.com

STRUCTURAL ENGINEER
CHARLES A. MANGANARO CONSULTING ENGINEERS
A PROFESSIONAL CORPORATION
303 SOUTH BROADWAY, SUITE 223, TARRYTOWN, NY 10591-5488
SHAILESH R. NAIK, P.E.
NEW YORK LICENSE No. 072797-1

MEP ENGINEER
OLA Consulting Engineers
50 Broadway,
Hawthorne, NY 10532
914.747.2800
8 West 38th Street,
Suite 501
New York, NY 10018
646.846.4110
ola-cs.com

NO.	REVISION/ISSUE	DATE
1	ISSUE FOR PERMIT	03/12/2021

SEAL
REGISTERED ARCHITECT LAUZETTE DIMOVSKI 032316 STATE OF NEW YORK

PROJECT
LIBERTY PLAZA SUITES
500 COMMERCE ST.
TOWN OF MT. PLEASANT, NY

DATE:	AUGUST 12, 2020
PROJECT NO:	DA 2034
DRAWN BY:	YK
CHECKED BY:	PD/SGD
SCALE:	AS NOTED

DRAWING TITLE
AMERICANS WITH DISABILITIES ACT NATIONAL STANDARD GUIDELINES

SHEET NO.
A-002

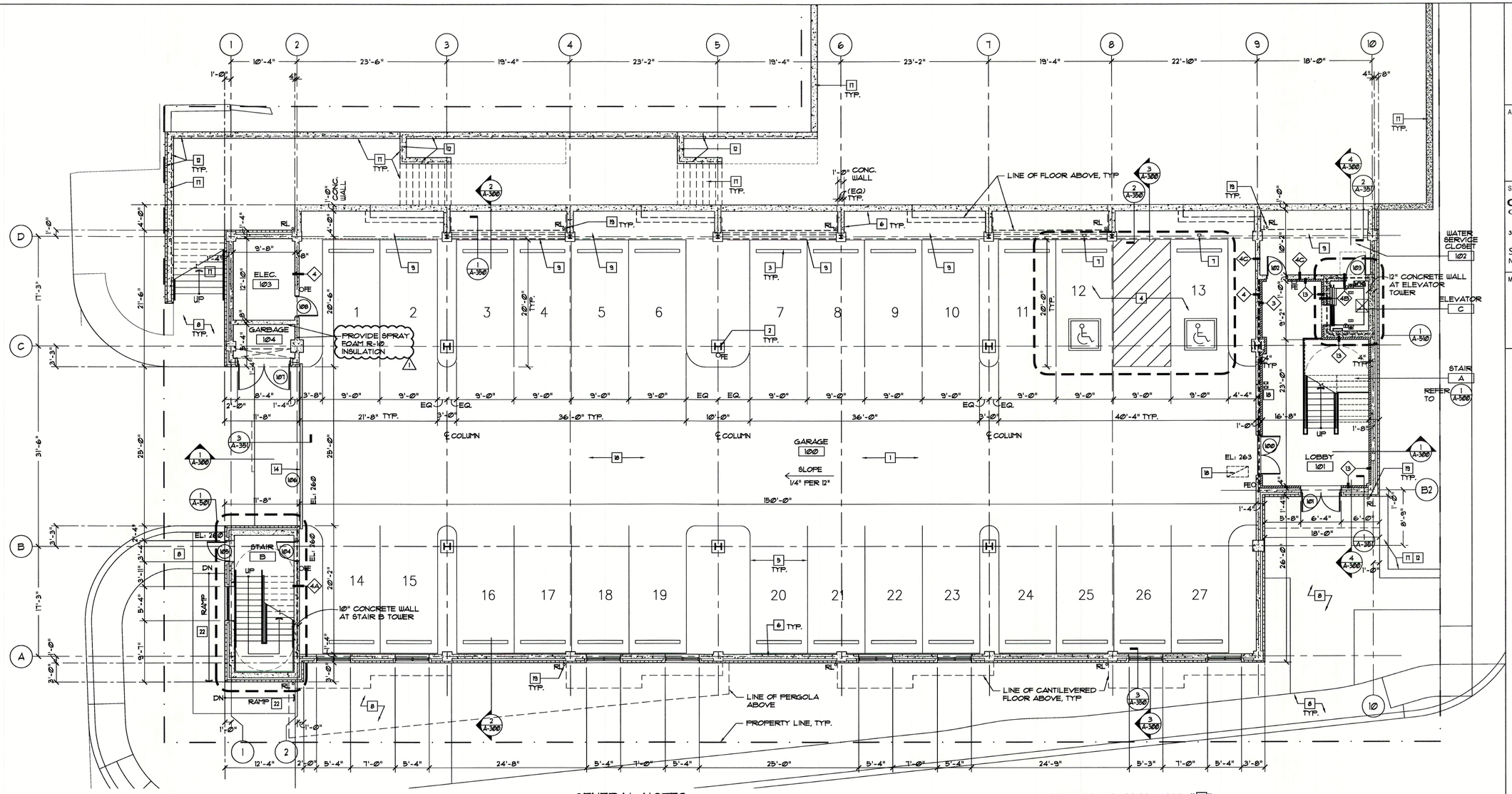

1 FIRST FLOOR CONSTRUCTION PLAN (GARAGE LEVEL)
SCALE: 1/8" = 1'-0"

LEGEND

- CONCRETE WALL
- CMU WALL
- BRICK VENEER
- NEW METAL STUD WALL WITH 5/8" TYPE "X" FIRECODE GYPSUM WALL BOARD
- 6" UON — NEW DOOR & FRAME, TYP. SEE DOOR SCHEDULE
- F.E. — SEMI RECESSED FIRE EXTINGUISHER, REFER TO NOTE 9.
- F.E. — FIRE EXTINGUISHER ON BRACKET, REFER TO GENERAL NOTE 9.
- ONE HOUR FIRE BARRIER
- ONE HOUR FIRE RATED WALL

1ST FLOOR (GARAGE LEVEL) COMMON AREA DOOR SCHEDULE

REFER TO A-900 FOR DOOR NOTES, ELEVATIONS, HARDWARE SCHEDULE, ETC.

DOOR NUMBER	DOOR TYPE	DOOR MATERIAL	DOOR SIZE WIDTH	DOOR SIZE HEIGHT	DOOR THICKNESS	DOOR HAND	DOOR UNDERCUT	FRAME TYPE	FRAME MATERIAL	FRAME THICKNESS	HARDWARE	RATING	REMARKS
100	B	HM-16GA	(2) 3'-0"	x7'-0"	1 3/4"		3/8"	B	HM-16GA		H16	60 MIN	FIRE-LITE FIRE RATED GLAZING, MIN. 60 MIN. ⚠1
101	C	MFR	(2) 3'-0"	x7'-0"	MFR		-	MFR	MFR		H4	-	
102	A	HM-16GA	(1) 3'-0"	x7'-0"	1 3/4"		3/8"	A	HM-16GA		H1	-	
103	A	HM-16GA	(1) 3'-0"	x7'-0"	1 3/4"		3/8"	A	HM-16GA		H1	-	
104	A	HM-16GA	(1) 3'-0"	x7'-0"	1 3/4"		3/8"	A	HM-16GA		H3	60 MIN	⚠
105	A	HM-16GA	(1) 3'-0"	x7'-0"	1 3/4"		3/8"	A	HM-16GA		H2	-	
106	D	SS	25'-0"	x10'-0"	-		-	-	-		H13	-	VIF EXACT SIZE OF OPENING PRIOR TO ORDER. INSTALL AS PER MFR'S REQUIREMENTS
107	G	SS	6'-0"	x7'-0"	-		-	-			H15		VIF EXACT SIZE OF OPENING PRIOR TO ORDER. INSTALL AS PER MFR'S REQUIREMENTS SEE JAMB DETL 11/A-901
108	A	HM-16GA	(1) 3'-0"	x7'-0"	1 3/4"		3/8"	A	HM-16GA		H1	-	

GENERAL NOTES

A. ECCCNYS NOTES:
- 1.1. SEAL ALL EXTERIOR JOINTS AROUND ALL DOOR AND WINDOW FRAMES & MAS. EXPANSION I.
- 1.2. SEAL ALL OPENINGS FOR PLUMBING AND ELECTRICAL
- 1.3. SEAL ALL OTHER PENETRATIONS OF THE BUILDING ENVELOPE.
- 1.4. ADDITIONAL ENERGY EFFICIENT PACKAGE OPTION: PROVIDE LED LIGHTING IN PARKING GARAGE AT FIRST FLOOR.
- 1.5. SECOND AND THIRD FLOORS: A PERMANENT CERTIFICATE DESCRIBING ALL PERTINENT ENERGY CONSERVATION CRITERIA FOR THE BUILDING SHALL BE POSTED IN A DESIGNATED LOCATION.
- 1.6. SECOND AND THIRD FLOORS: THERMAL ENVELOPE AIR LEAKAGE TESTS SHALL BE CONDUCTED IN ACCORDANCE WITH ASTM E779 or ASTM E1827.
- 1.7. PROVIDE A WRITTEN REPORT WITH THE RESULTS OF THE TESTS OUTLINED ABOVE.
- 1.8. ALL RECESSED LUMINAIRES SHALL BE IC-RATED AND SEALED WITH A GASKET OR CAULKED AT THE HOUSEING TO PREVENT AIR LEAKAGE OF MORE THAN 2.0 CFM.

B. REFERENCE CIVIL DRAWINGS FOR ALL FINISH FLOOR ELEVATIONS & EXTERIOR GRADES.

C. PRIOR TO START OF FRAMING, CONTRACTOR TO VERIFY ALL FRAMING REQUIREMENTS FOR MECHANICAL EQUIPMENT, CHASES AND PLENUMS, AND OTHER CONSTRUCTION NECESSARY FOR THIS PROJECT, BUT NOT SPECIFICALLY DETAILED IN THE CONSTRUCTION DOCUMENTS.

D. ALL THRESHOLDS SHALL BE NO HIGHER THAN 1/2" AND BEVELED AT THE EDGES WITH THE SLOPE BEING NO GREATER THAN 1:2

E. GLASS & GLAZING SUBJECT TO HUMAN IMPACT SHALL CONFORM TO BC NYS SECTION 2406.

F. LIGHT AND VENTILATION REQUIREMENTS SHALL BE PER BCNYS SECTION 1202, 1204 AND BCNYS TABLE 403.3.

G. ALL MASONRY DIMENSIONS ARE NOMINAL. ALL CORNERS OTHER THAN 90° SHALL BE MITERED TYP.

H. ALL NEW PARTITIONS, DOORS, AND FRAMES SHALL BE PRIMED AND PAINTED. BUILDING TO BE PROVIDED WITH AUTOMATIC FIRE PROTECTION SPRINKLER SYSTEM, INCLUDING ALL CONCEALED SPACE, IN ACCORDANCE WITH NFPA-13.

J. 8'-2" AFF MIN. HEAD CLEARANCE REQUIRED IN THE 1ST FLOOR FOR ADA PARKING SPACE AND VEHICULAR ROUTE PER ADA STANDARDS SECTION 502.5. COORDINATE WITH ENGINEER'S DRAWINGS FOR PIPE AND STEEL CLEARANCE.

K. 7'-6" AFF MIN. HEAD CLEARANCE REQUIRED IN THE 1ST FLOOR FOR ACCESSIBLE ROUTE. COORDINATE WITH ENGINEER'S DRAWINGS.

L. PROVIDE LARSEN'S ARCHITECTURAL SERIES SEMI-RECESSED CABINET. PROVIDE FIRE RATED CABINET. COORDINATE W/ WALL TYPE. FIRE EXTINGUISHERS TO BE 2a-10bc TYPE. PROVIDE PORTABLE FIRE EXTINGUISHERS 2a-10bc TYPE, MTD. ON WALL BRACKET 42" AFF. REFER TO PLAN FOR LOCATIONS. ALL MOUNTING HEIGHT TO COMPLY WITH ADA REQUIREMENT. VERIFY QUANTITY & LOCATIONS WITH FIRE CITY FIRE DEPT. TYP.

M. UNLESS NOTED OTHERWISE ALL DIMENSIONS ARE MEASURED FROM:
- 1.1. FACE OF MASONRY OR CONCRETE,
- 1.2. FACE OF GYP. BD. AT TYPICAL INTERIOR PARTITIONS. SEE PARTITION TYPES TYP.

N. PROVIDE STEEL ANGLE/BOND BEAM AT MASONRY OPENING(S). COORDINATE W/ STRUCT. DWGS.

O. FIRESTOP ALL WALLS/CEILING/FLOOR PENETRATIONS AT RATED WALLS/CEILING/FLOOR WITH APPROVED HILTI FIRESTOPPING. TYPICAL AT ALL PENETRATIONS.

P. GC TO PROVIDE NOTATION AT ALL FIRE PARTITION/BARRIER LOCANTIONS AND FLOOR-CEILING CAVITY READING "FIRE AND/OR SMOKE BARRIER-PROTECT ALL OPENINGS". THE NOTATION SHALL BE LOCATED WITHIN 15 FEET OF THE END OF EACH WALL AND AT INTERVALS, NOT EXCEEDING 30 FEET MEASURED HORIZONTALLY. LETTERING SHALL BE MIN 3" HIGH WITH A MIN 3/8" STROKE IN A CONTRASTING COLOR. REFER TO A-200 FOR LOCATIONS OF FIRE PARTITIONS/BARRIERS.

CONSTRUCTION NOTES "-"

1. CONCRETE SLAB ON GRADE. REFER TO STRUCTURAL DWGS. REFER TO FINISH SCHEDULE.
2. STEEL COLUMN AND CONC. PIER (42" HIGH ABOVE FIRST FLOOR ELEV. 263'). (6) TOTAL. REFER TO STRUCTURAL DWGS FOR DETAILS. PAINT.
3. 1 1/2"x12" PRECAST CONCRETE WHEEL STOP. MFR: GRANITE PRECASTING & CONCRETE, INC. 800-808-2251 OR APPROVED EQUAL. PROVIDE TWO STEEL ANCHOR BOLTS.
4. ACCESSIBLE PARKING SPACE. REFER TO DETAIL ON A-801. MIN. 98" AFF CEILING HEIGHT PER ADA STANDARDS SECTION 502.5.
5. 4" PAINTED PARKING STRIP.
6. REINFORCED CONCRETE FOUNDATION WALL (PAINT). REFER TO STRUCTURAL DWGS. REFER TO FINISH SCHEDULE.
7. ACCESSIBLE SIGN. REFER TO DETAIL ON A-801
8. REFER TO CIVIL DRAWINGS FOR SITE LAYOUT, EXTENT OF RETAINING WALL, WALKWAY, OUTDOOR SPACE, DETAILS, ETC.
9. REINFORCED PRECAST CONC. SLAB ABOVE, REFER TO STRUCT. DWGS AND WALL DETAILS ON A-350/A-351.
10. PAINTED STEEL FRAMED PERGOLA, SEE STRUCT. DWGS.
11. PAVERS OVER REINFORCED STRUCTURAL SLAB. REFER TO STRUCTURAL DWGS AND WALL DETAILS.
12. 4" BRICK VENEER, PROVIDE BRICK TIES, BRICK RELIEVING ANGLE, BRICK SHELF. COORDINATE W/ STRUCT. DWGS.
13. MAIL BOX. COORDINATE W/ OWNER/ARCHITECT.
14. INSULATED GARAGE DOOR W/ LOUVER. SEE DOOR SCHEDULE.
15. TRENCH DRAIN, REFER TO PLUMBING DRAWINGS AND CIVIL DRAWINGS.
16. PROVIDE ACCESS PANEL IN SHAFT IF REQUIRED PER ENGINEER'S DRAWINGS. COORDINATE W/ ENGINEER'S DRAWINGS FOR LOCATION AND SIZE. CONFIRM W/ ARCHITECT FOR FINAL LOCATION.
17. REINFORCED CONC. RETAINING WALL (W/ 4'' BOOND BEAM AT DESIGNATED LOCATIONS), CONC. STAIR, 42" AFF 1-1/2" DIA. STEEL GUARDRAIL, 33"-36" ABOVE NOSING | 1/2" DIA. STEEL HANDRAIL. REFER TO ELEVATIONS. REFER TO STRUCT. DWGS. FOR DETAILS. GUARDRAIL TO BE 1 1/2" DIA. STEEL PIPE TOP RAIL, BOTTOM RAIL AND POST @ 4'-0" MAX. PROVIDE 1 1/2" VERTICAL BALUSTERS @ 5" MAX SPACING. PAINT ALL STEEL PIPES. COORDINATE W/ CIVIL DRAWINGS FOR COMPLETE SCOPE OF RETAINING WALL HEIGHTS AND LOCATIONS.
18. FLOOR/CEILING PENETRATION FOR DUCT, PIPE, ETC. FOR REFERENCE ONLY. COORDINATE W/ MEP ENGINEER'S DWGS FOR FULL SCOPE OF LOCATION AND SIZE. REFER TO STRUCT. DRAWINGS. FIRESTOP W/ APPROVED HILTI FIRESTOPPING AT ALL PENETRATIONS.
19. ROOF LEADER, COORDINATE W/ CIVIL AND PLUMBING DRAWINGS.
20. SHAFT WALL FOR GARBAGE ROOM EXHAUST. COORDINATE W/ MECH. DWG.
21. VEHICLE GUARDRAIL, REFER TO CIVIL DRAWING.
22. FUTURE PHASE 2 RAMP. REFER TO CIVIL DRAWING.

LIBERTY PLAZA SUITES

500 COMMERCE STREET
HAWTHORNE, NY 10532

ARCHITECT

dimovski architecture
59 Kensico Road, Thornwood, NY 10594
(914) 747-3500 | (914) 747-3588 fax
www.dimovskiarchitecture.com

STRUCTURAL ENGINEER

CHARLES A. MANGANARO CONSULTING ENGINEERS
A PROFESSIONAL CORPORATION
303 SOUTH BROADWAY, SUITE 223, TARRYTOWN, NY 10591-5488
SHAILESH R. NAIK, P.E.
NEW YORK LICENSE No. 072797-1

MEP ENGINEER

OLA Consulting Engineers
50 Broadway
Hawthorne, NY 10532
914.747.3800
&
5 West 30th Street,
Suite 501
New York, NY 10018
646.848.4110
ola-ce.com

NO.	REVISION/ISSUE	DATE
3	ISSUE FOR DOB COMMENT ⚠1	04/26/2021
2	ISSUE FOR PRICING	03/16/2021
1	ISSUE FOR PERMIT	03/12/2021

SEAL

REGISTERED ARCHITECT DAULETTE DIMOVSKI 032261 STATE OF NEW YORK

PROJECT

LIBERTY PLAZA SUITES
500 COMMERCE ST.
TOWN OF MT. PLEASANT, NY

DATE:	AUGUST 12, 2020
PROJECT NO:	DA 2034
DRAWN BY:	YK
CHECKED BY:	PD/SGD
SCALE:	AS NOTED

DRAWING TITLE

FIRST FLOOR (GARAGE LEVEL) CONSTRUCTION PLAN AND NOTES

SHEET NO.

A-101

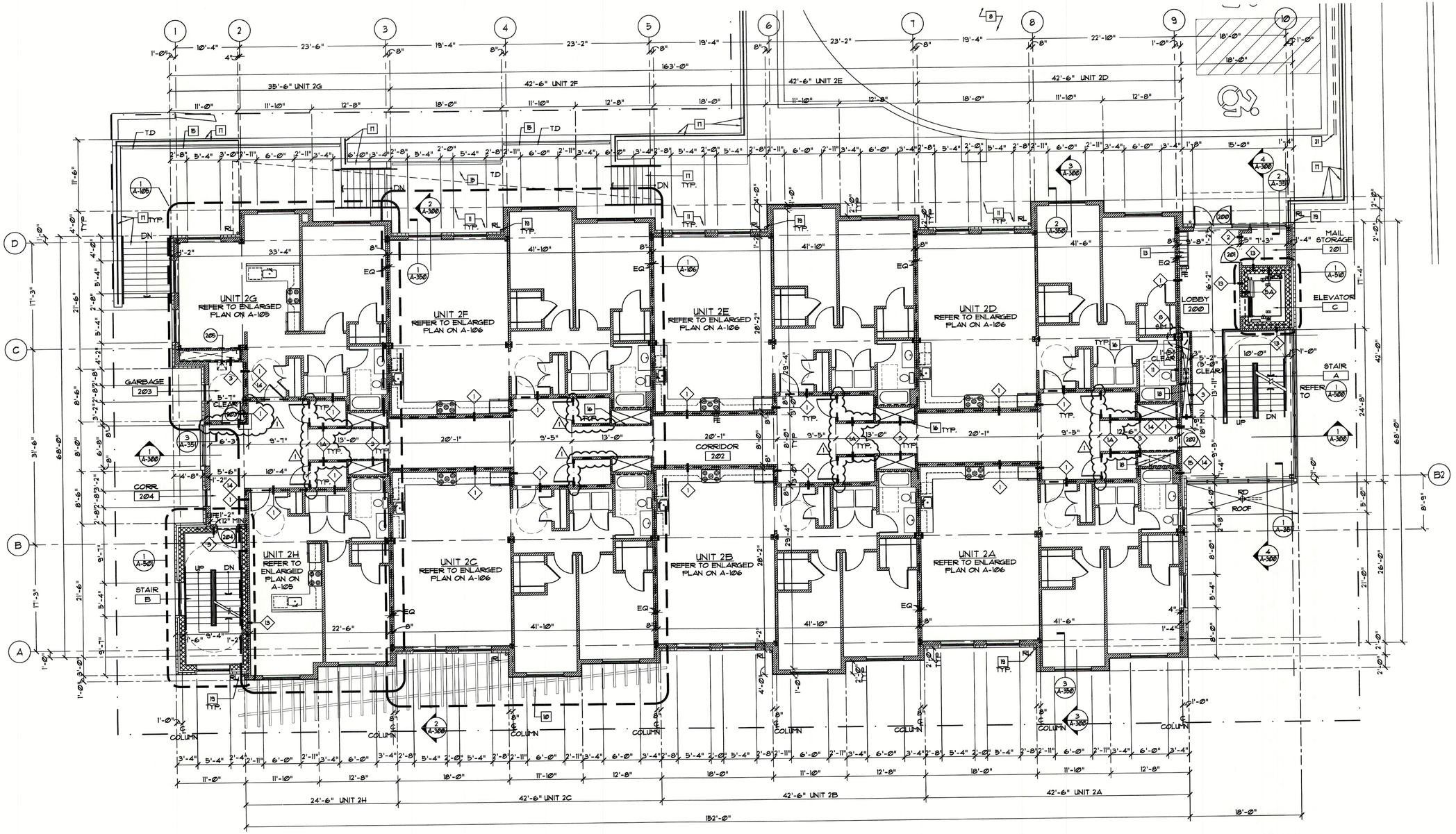

1 SECOND FLOOR CONSTRUCTION PLAN

SCALE: 1/8" = 1'-0"

NOTES

1. REFER TO A-101 FOR GENERAL NOTES & LEGEND.

2ND FLOOR COMMON AREA DOOR SCHEDULE

REFER TO A-300 FOR DOOR NOTES, ELEVATIONS, HARDWARE SCHEDULE, ETC.

DOOR		DOOR						FRAME			HARDWARE		
			SIZE										
DOOR NUMBER	TYPE	MATERIAL	WIDTH	HEIGHT	THICKNESS	HAND	UNDERCUT AFF	TYPE	MATERIAL	THICKNESS		RATING	REMARKS
200	C	MFR	(2) 3'-0"x7'-0"		-		-	MFR	MFR		H4	-	
201	A	HM-16GA	(1) 3'-0"x7'-0"		1 3/4"		3/8"	A	NHM-16GA		H7		
202	B	HM-16GA	(1) 3'-0"x7'-0"		1 3/4"		3/8"	A	NHM-16GA		H3	60 MIN	FIRELITE FIRE RATED GLAZING MIN 60 MIN.
203	A	HM-16GA	(1) 3'-0"x7'-0"		1 3/4"		3/8"	A	NHM-16GA		H5	45 MIN	PROVIDE SELF CLOSING CLOSER
204	A	HM-16GA	(1) 3'-0"x7'-0"		1 3/4"		3/8"	A	NHM-16GA		H3	60 MIN	
205	E	MFR	(1) 15"x18"		-		-	-	MFR		H6	60 MIN	

CONSTRUCTION NOTES "-"

1. CONCRETE SLAB ON GRADE. REFER TO STRUCTURAL DWGS. REFER TO FINISH SCHEDULE.
2. STEEL COLUMN AND CONC. PIER (42" HIGH ABOVE FIRST FLOOR ELEV. 263'), (6) TOTAL. REFER TO STRUCTURAL DWGS FOR DETAILS. PAINT.
3. 7 1/2"x12" PRECAST CONCRETE WHEEL STOP. MFR: GRANITE PRECASTING & CONCRETE, INC. 800-808-2251 OR APPROVED EQUAL. PROVIDE TWO STEEL ANCHOR BOLTS.
4. ACCESSIBLE PARKING SPACE. REFER TO DETAIL ON A-801. MIN. 98" AFF CEILING HEIGHT PER ADA STANDARDS SECTION 502.5.
5. 4" PAINTED PARKING STRIP.
6. REINFORCED CONCRETE FOUNDATION WALL (PAINT), REFER TO STRUCTURAL DWGS. REFER TO FINISH SCHEDULE.
7. ACCESSIBLE SIGN. REFER TO DETAIL ON A-801
8. REFER TO CIVIL DRAWINGS FOR SITE LAYOUT, EXTENT OF RETAINING WALL, WALKWAY, OUTDOOR SPACE, DETAILS, ETC.
9. REINFORCED PRECAST CONC. SLAB ABOVE, REFER TO STRUCT. DWGS AND WALL DETAILS ON A-350/A-351.
10. PAINTED STEEL FRAMED PERGOLA, SEE STRUCT. DWGS.
11. PAVERS OVER REINFORCED STRUCTURAL SLAB. REFER TO STRUCTURAL DWGS AND WALL DETAILS.
12. 4" BRICK VENEER. PROVIDE BRICK TIES, BRICK RELIEVING ANGLE, BRICK SHELF. COORDINATE W/ STRUCT. DWG.
13. MAIL BOX. COORDINATE W/ OWNER/ARCHITECT.
14. INSULATED GARAGE DOOR W/ LOUVER. SEE DOOR SCHEDULE.
15. TRENCH DRAIN, REFER TO PLUMBING DRAWINGS AND CIVIL DRAWINGS.
16. PROVIDE ACCESS PANEL IN SHAFT IF REQUIRED PER ENGINEER'S DRAWINGS. COORDINATE W/ ENGINEER'S DRAWINGS FOR LOCATION AND SIZE. CONFIRM W/ ARCHITECT FOR FINAL LOCATION.
17. REINFORCED CONC. RETAINING WALL (W/ 4" BRICK VENEER AT DESIGNATED LOCATIONS), CONC. STAIR, 42" AFF 1-1/2" DIA. STEEL GUARDRAIL. 33"-36" ABOVE NOSING 1 1/2" DIA. STEEL HANDRAIL. REFER TO ELEVATIONS. REFER TO STRUCT. DWGS. FOR DETAILS.
18. GUARDRAIL TO BE 1 1/2" DIA. STEEL PIPE TOP RAIL, BOTTOM RAIL AND POST @ 4'-0" MAX. PROVIDE 1 1/2" VERTICAL BALUSTERS @ 5" MAX SPACING. PAINT ALL STEEL PIPES. COORDINATE W/ CIVIL DRAWINGS FOR COMPLETE SCOPE OF RETAINING WALL HEIGHTS AND LOCATIONS.
19. FLOOR/CEILING PENETRATION FOR DUCT, PIPE, ETC. FOR REFERENCE ONLY. COORDINATE W/ MEP ENGINEER'S DWGS FOR FULL SCOPE OF LOCATION AND SIZE. REFER TO STRUCT. DRAWINGS. FIRESTOP W/ APPROVED HILTI FIRESTOPPING AT ALL PENETRATIONS.
20. ROOF LEADER. COORDINATE W/ CIVIL AND PLUMBING DRAWINGS.
21. SHAFT WALL FOR GARBAGE ROOM EXHAUST. COORDINATE W/ MECH. DWG.
22. VEHICLE GUARDRAIL, REFER TO CIVIL DRAWING.
23. FUTURE PHASE 2 RAMP. REFER TO CIVIL DRAWINGS.

LIBERTY PLAZA SUITES

500 COMMERCE STREET
HAWTHORNE, NY 10532

ARCHITECT

dimovski architecture PLLC
59 Kensico Road, Thornwood, NY 10594
(914) 747-3500 | (914) 747-3588 fax
www.dimovskiarchitecture.com

STRUCTURAL ENGINEER

CHARLES A. MANGANARO CONSULTING ENGINEERS
A PROFESSIONAL CORPORATION
303 SOUTH BROADWAY, SUITE 223, TARRYTOWN, NY 10591-5488
SHAILESH R. NAIK, P.E.
NEW YORK LICENSE No. 072797-1

MEP ENGINEER

OLA Consulting Engineers
50 Broadway
Hawthorne, NY 10532
914.747.2500
8 West 38th Street,
Suite 801
New York, NY 10018
646.946.4110
olace.com

NO.	REVISION/ISSUE	DATE
3	ISSUE FOR DOB COMMENT 1	04/26/2021
2	ISSUE FOR PRICING	03/16/2021
1	ISSUE FOR PERMIT	03/12/2021

SEAL

REGISTERED ARCHITECT
PAULETTE DIMOVSKI
032380
STATE OF NEW YORK

PROJECT

LIBERTY PLAZA SUITES
500 COMMERCE ST.
TOWN OF MT. PLEASANT, NY

DATE:	AUGUST 12, 2020
PROJECT NO:	DA 2034
DRAWN BY:	YK
CHECKED BY:	PD/SGD
SCALE:	AS NOTED

DRAWING TITLE

SECOND FLOOR CONSTRUCTION PLAN

SHEET NO.

A-102

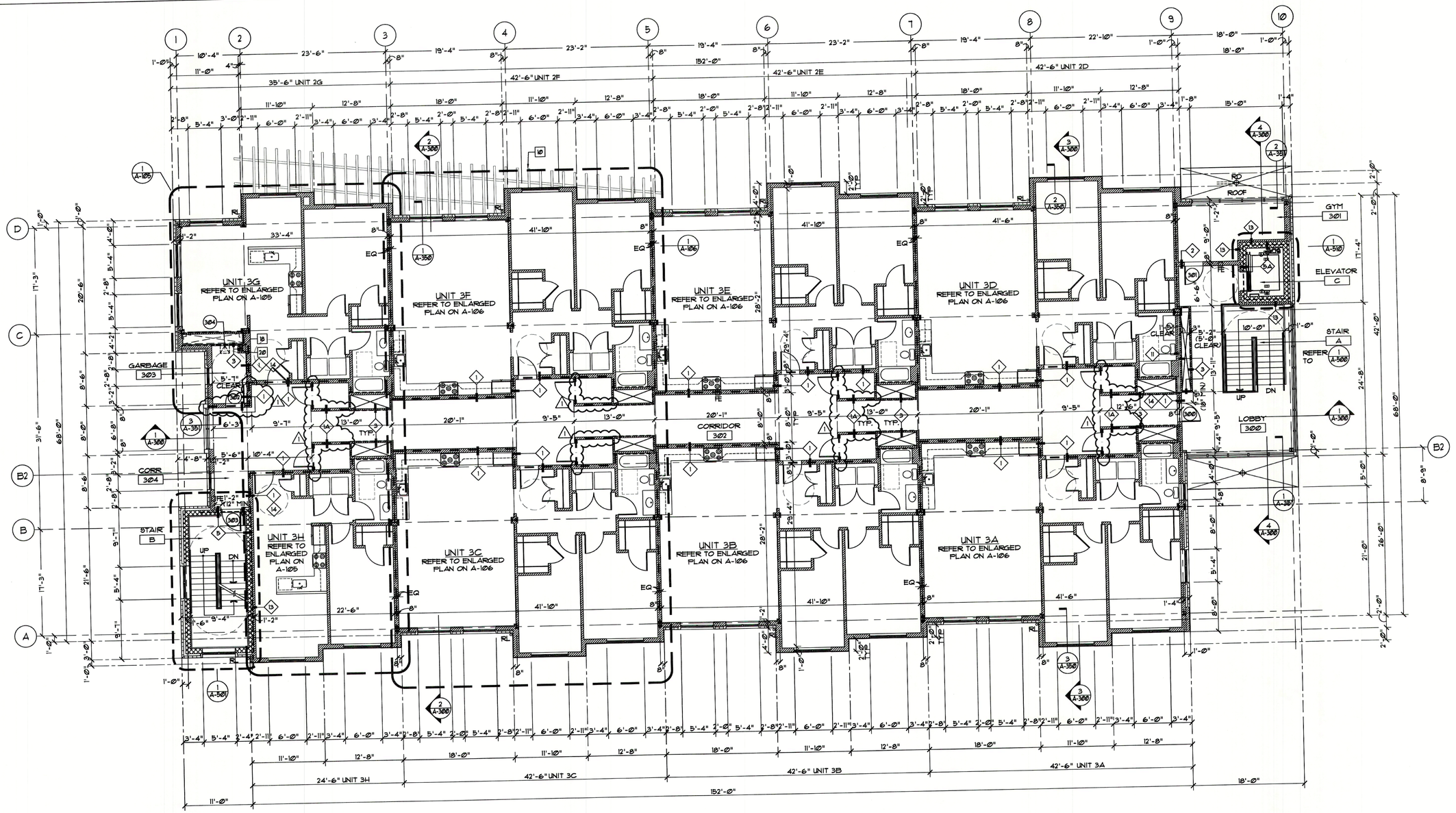

1 THIRD FLOOR CONSTRUCTION PLAN

SCALE: 1/8" = 1'-0"

NOTES

1. REFER TO A-101 FOR GENERAL NOTES & LEGEND.

3RD FLOOR COMMON AREA DOOR SCHEDULE

REFER TO A-300 FOR DOOR NOTES, ELEVATIONS, HARDWARE SCHEDULE, ETC. TYP.

DOOR NUMBER	DOOR TYPE	DOOR MATERIAL	DOOR SIZE WIDTH	DOOR SIZE HEIGHT	DOOR THICKNESS	DOOR HAND	DOOR UNDERCUT AFF	FRAME TYPE	FRAME MATERIAL	FRAME THICKNESS	HARDWARE	RATING	REMARKS
300	B	HM-16GA	(1) 3'-0"	x7'-0"	1 3/4"		3/8"	A	WHM-16GA		H3	60 MIN	FIRELITE FIRE RATED GLAZING, MIN. 60 MIN. /1
301	H	HM-16GA	(1) 3'-0"	x7'-0"	1 3/4"		3/8"	A	WHM-16GA		H7	60 MIN	PROVIDE SELF CLOSING CLOSER
302	A	HM-16GA	(1) 3'-0"	x7'-0"	1 3/4"		3/8"	A	WHM-16GA		H5	60 MIN	
303	A	HM-16GA	(1) 3'-0"	x7'-0"	1 3/4"		3/8"	A	WHM-16GA		H3	60 MIN	
304	E	MFR	(1) 15"	x18"	-		-	-	MFR		H6	60 MIN	/1

ROOF FLOOR (4TH LEVEL) DOOR SCHEDULE

REFER TO ROOF FLOOR PLAN, A-104.

400	A	HM-16GA	(1) 3'-0"	x6'-8"	1 3/4"		3/8"	A	WHM-16GA		H14	-	

CONSTRUCTION NOTES "-"

1. CONCRETE SLAB ON GRADE, REFER TO STRUCTURAL DWGS. REFER TO FINISH SCHEDULE.
2. STEEL COLUMN AND CONC. PIER (42" HIGH ABOVE FIRST FLOOR ELEV. 263'). (6) TOTAL. REFER TO STRUCTURAL DWGS FOR DETAILS. PAINT.
3. 7 1/2"x12" PRECAST CONCRETE WHEEL STOP. MFR: GRANITE PRECASTING & CONCRETE, INC. 800-808-2251 OR APPROVED EQUAL. PROVIDE TWO STEEL ANCHOR BOLTS.
4. ACCESSIBLE PARKING SPACE. REFER TO DETAIL ON A-801. MIN. 98" AFF CEILING HEIGHT PER ADA STANDARDS SECTION 502.5.
5. 4" PAINTED PARKING STRIP.
6. REINFORCED CONCRETE FOUNDATION WALL (PAINT). REFER TO STRUCTURAL DWGS. REFER TO FINISH SCHEDULE.
7. ACCESSIBLE SIGN. REFER TO DETAIL ON A-801
8. REFER TO CIVIL DRAWINGS FOR SITE LAYOUT, EXTENT OF RETAINING WALL, WALKWAY, OUTDOOR SPACE, DETAILS, ETC.
9. REINFORCED PRECAST CONC. SLAB ABOVE, REFER TO STRUCT. DWGS AND WALL DETAILS ON A-350/A-351.
10. PAINTED STEEL FRAMED PERGOLA, SEE STRUCT. DWGS.
11. PAVERS OVER REINFORCED STRUCTURAL SLAB. REFER TO STRUCTURAL DWGS AND WALL DETAILS.
12. 4" BRICK VENEER, PROVIDE BRICK TIES, BRICK RELIEVING ANGLE, BRICK SHELF. COORDINATE W/ STRUCT. DWG.
13. MAIL BOX. COORDINATE W/ OWNER/ARCHITECT.
14. INSULATED GARAGE DOOR W/ LOUVER. SEE DOOR SCHEDULE.
15. TRENCH DRAIN, REFER TO PLUMBING DRAWINGS AND CIVIL DRAWINGS.
16. PROVIDE ACCESS PANEL IN SHAFT IF REQUIRED PER ENGINEER'S DRAWINGS. COORDINATE W/ ENGINEER'S DRAWINGS FOR LOCATION AND SIZE. CONFIRM W/ ARCHITECT FOR FINAL LOCATION.
17. REINFORCED CONC. RETAINING WALL (W/ 4" BRICK VENEER AT DESIGNATED LOCATIONS), CONC. STAIR, 42" AFF 1-1/2" DIA. STEEL GUARDRAIL. 33"-36" ABOVE NOSING 1 1/2" DIA. STEEL HANDRAIL. REFER TO ELEVATIONS. REFER TO STRUCT. DWGS. FOR DETAILS.
18. GUARDRAIL TO BE 1 1/2" DIA. STEEL PIPE TOP RAIL, BOTTOM RAIL AND POST @ 4'-0" MAX. PROVIDE 1 1/2" VERTICAL BALUSTERS @ 5" MAX SPACING. PAINT ALL STEEL PIPES. COORDINATE W/ CIVIL DRAWINGS FOR COMPLETE SCOPE OF RETAINING WALL HEIGHTS AND LOCATIONS.
19. FLOOR/CEILING PENETRATION FOR DUCT, PIPE, ETC. FOR REFERENCE ONLY. COORDINATE W/ MEP ENGINEER'S DWGS FOR FULL SCOPE OF LOCATION AND SIZE. REFER TO STRUCT. DRAWINGS. FIRESTOP W/ APPROVED HILTI FIRESTOPPING AT ALL PENETRATIONS.
20. ROOF LEADER, COORDINATE W/ CIVIL AND PLUMBING DRAWINGS.
21. SHAFT WALL FOR GARBAGE ROOM EXHAUST. COORDINATE W/ MECH. DWG.
22. VEHICLE GUARDRAIL, REFER TO CIVIL DRAWING.
23. FUTURE PHASE 2 RAMP. REFER TO CIVIL DRAWINGS.

LIBERTY PLAZA SUITES

500 COMMERCE STREET
HAWTHORNE, NY 10532

ARCHITECT

dimovskiarchitecture
59 Kensico Road, Thornwood, NY 10594
(914) 747-3500 | (914) 747-3588 fax
www.dimovskiarchitecture.com

STRUCTURAL ENGINEER

CHARLES A. MANGANARO
CONSULTING ENGINEERS
A PROFESSIONAL CORPORATION
303 SOUTH BROADWAY, SUITE 223, TARRYTOWN, NY 10591-5488

SHAILESH R. NAIK, P.E.
NEW YORK LICENSE No. 072797-1

MEP ENGINEER

CLA Consulting Engineers
50 Broadway
Hawthorne, NY 10532
914.747.3500
8 West 38th Street,
Suite 501
New York, NY 10018
646.848.4110
clcos.com

NO.	REVISION/ISSUE	DATE
3	ISSUE FOR DOB COMMENT /1	04/26/2021
2	ISSUE FOR PRICING	03/16/2021
1	ISSUE FOR PERMIT	03/12/2021

SEAL

REGISTERED ARCHITECT
JULIETTE DIMOVSKI
032361
STATE OF NEW YORK

PROJECT

LIBERTY PLAZA SUITES
500 COMMERCE ST.
TOWN OF MT. PLEASANT, NY

DATE:	AUGUST 12, 2020
PROJECT NO:	DA 2034
DRAWN BY:	YK
CHECKED BY:	PD/SGD
SCALE:	AS NOTED

DRAWING TITLE

THIRD FLOOR CONSTRUCTION PLAN

SHEET NO.

A-103

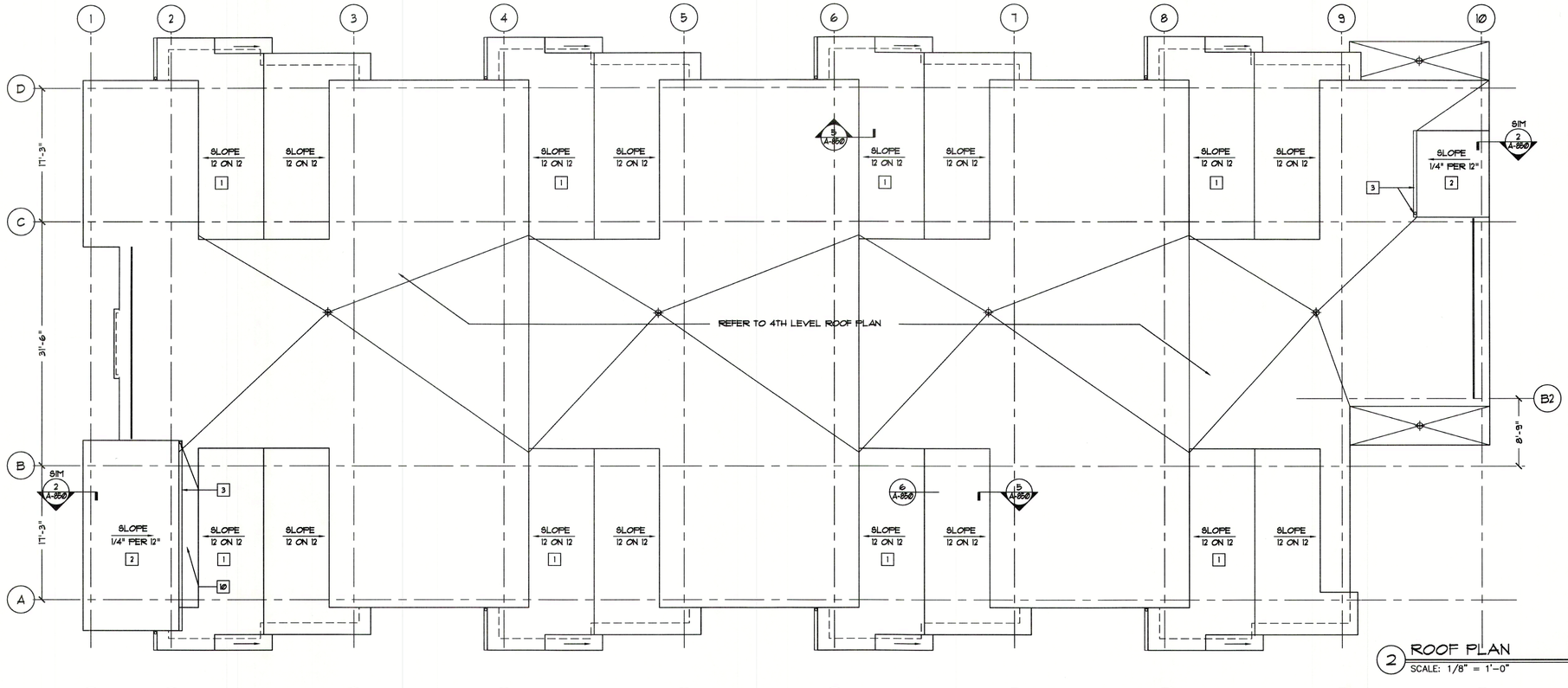

2 ROOF PLAN
SCALE: 1/8" = 1'-0"

ROOF NOTES

1. REFER TO STRUCTURAL DRAWINGS FOR ROOF FRAMING INFORMATION.
2. PROVIDE ALL REQUIRED FLASHING AT ALL ROOF CONNECTIONS.
3. PROVIDE INSULATIONS AS SHOWN IN BUILDING SECTIONS AND WALL SECTION.

ROOF CONSTRUCTION NOTES "[-]"

1. STANDING SEAM ROOF, REFER TO TYP. WALL SECTION AND DETAILS ON A-850.
2. EPDM FLEECEBACK ROOF MEMBRANE BY CARLISLE, INSTALL AS PER MFR'S SPECIFICATION. SLOPE 1/4" PER 12" AT MAIN ROOF, ELEVATOR TOWER AND STAIR TOWER. FLAT ROOF ASSEMBLY AT ENCLOSED AREA (UNDER GABLE ROOF). REFER TO DETAIL ON A-850.
3. ALUMINUM GUTTER & LEADER SYSTEM.
4. 42"AFF I 1/2" DIA. STEEL PIPE GUARDRAIL, POST SPACING TO BE 4'-0" O.C. MAX. BOTTOM RAIL TO BE 4" AFF. PROVIDE (2) HORIZONTAL INTERMEDIATE RAILS (21" MAX SPACING) REFER TO EXTERIOR ELEVATION, PAINT.
5. 3 SF MIN. VENT PER ELEVATOR SPEC. PROVIDE 2'-8"Wx1'-4"H ALUM. LOUVER WITH INSECT SCREEN.
6. WALL CONSTRUCTION: FINISH SIDING, TYVEK, 3/4" EXTERIOR GRADE PLYWOOD SHEATHING, 6" METAL STUD @ 16" O.C. ON CONC. CURB.
7. CONCRETE CURB TO SUPPORT ROOF FRAMING AND WALL. SEE STRUCT. DWG.
8. PROVIDE SPLASH BLOCK AT ROOF LEADER LOCATION.
9. ROOF EQUIPMENT PER ENGINEER'S DRAWINGS.
10. PROVIDE CRICKET
11. PROVIDE PAD (SLIP SHEET) FOR ACC UNIT BY CARLISLE. SLIP SHEET TO WITHSTAND ACC UNIT WEIGHT.
12. PROVIDE 24"x24" ROOF PADS BY CARLISLE
13. ROOF SLAB PENETRATIONS FOR DUCT, PIPE, ETC. FOR REFERENCE ONLY. COORDINATE W/ MEP FOR FULL SCOPE OF SIZE AND LOCATION. REFER TO STRUCT. DRAWINGS. FIRESTOP W/ APPROVED HILTI FIRESTOPPING AT ALL PENETRATIONS.
14. PROVIDE R-49 SPRAY FOAM INSULATION BETWEEN ROOF RAFTERS WHERE R-30 INSULATION IS NOT INSTALLED AT ROOF SLAB (GABLE ROOF OVERHANG AREAS ONLY)

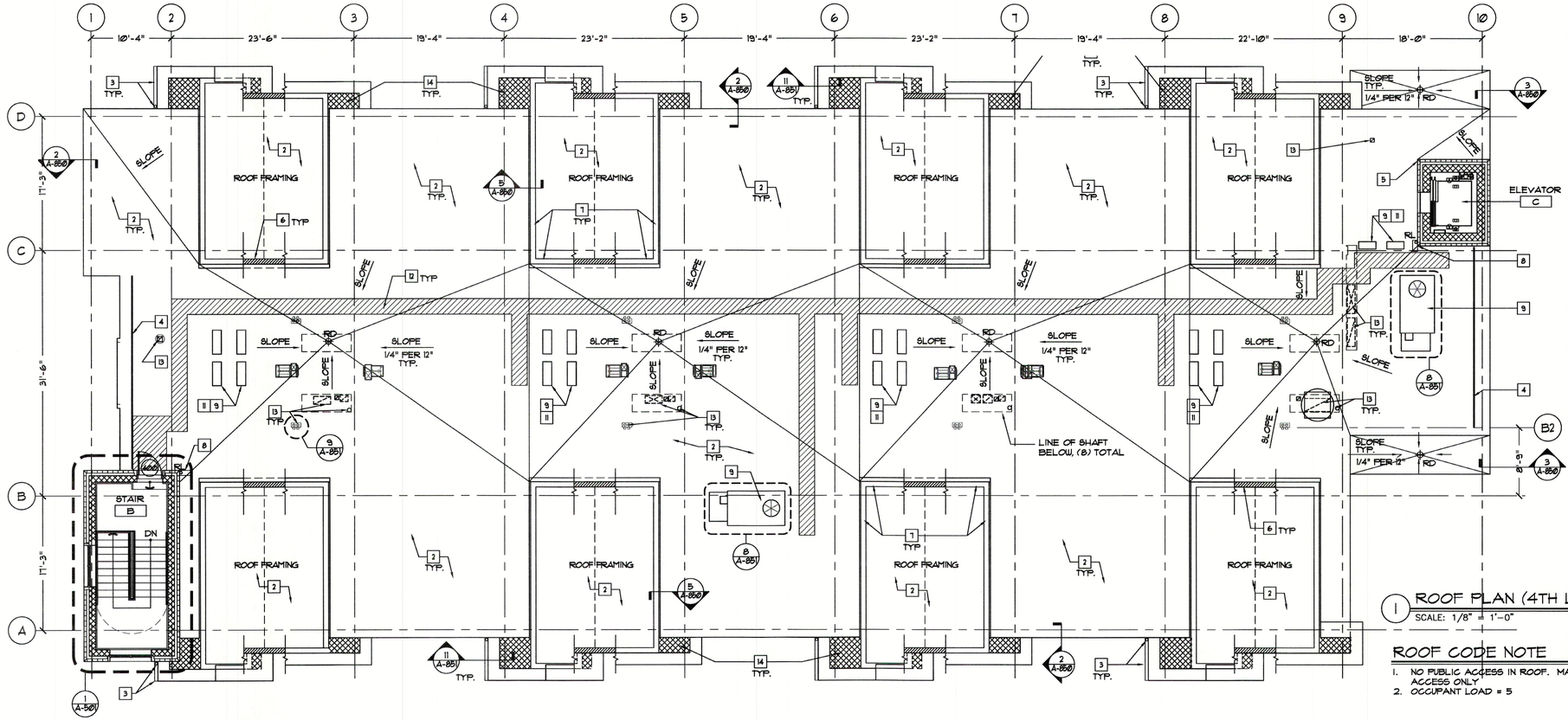

1 ROOF PLAN (4TH LEVEL)
SCALE: 1/8" = 1'-0"

ROOF CODE NOTE

1. NO PUBLIC ACCESS IN ROOF. MAINTENANCE ACCESS ONLY
2. OCCUPANT LOAD = 5

LIBERTY PLAZA SUITES

500 COMMERCE STREET
HAWTHORNE, NY 10532

ARCHITECT

dimovski architecture p.c.
59 Kensico Road, Thornwood, NY 10594
(914) 747-3500 | (914) 747-3588 fax
www.dimovskiarchitecture.com

STRUCTURAL ENGINEER

CHARLES A. MANGANARO
CONSULTING ENGINEERS
A PROFESSIONAL CORPORATION
303 SOUTH BROADWAY, SUITE 223, TARRYTOWN, NY 10591-5488
SHAILESH R. NAIK, P.E.
NEW YORK LICENSE No. 072797-1

MEP ENGINEER

GLA Consulting Engineers
50 Broadway
Hawthorne, NY 10532
914.747.2500
6 West 20th Street,
Suite 502
New York, NY 10018
646.848.4110
glace.com

NO.	REVISION/ISSUE	DATE
1	ISSUE FOR PERMIT	03/12/2021

SEAL

REGISTERED ARCHITECT JULIETTE DIMOVSKI 032561 STATE OF NEW YORK

PROJECT

LIBERTY PLAZA SUITES
500 COMMERCE ST.
TOWN OF MT. PLEASANT, NY

DATE:	AUGUST 12, 2020
PROJECT NO:	DA 2034
DRAWN BY:	YK
CHECKED BY:	PD/SGD
SCALE:	AS NOTED

DRAWING TITLE

4TH LEVEL ROOF PLAN & ROOF PLAN

SHEET NO.

A-104

LEGEND

- ONE HOUR FIRE BARRIER WALL
- ONE HOUR FIRE RATED WALL

NOTES

REFER TO A-101 FOR GENERAL NOTES & LEGEND

CONSTRUCTION NOTES "-"

1. CLOSET ROD AND (2) FIXED SHELVES ABOVE AT ALL CLOSETS U.O.N.
2. WASHER AND ELECTRIC DRYER, SEE APPLIANCE SCHEDULE. REFER TO ENGINEER'S DRAWINGS FOR VENT REQUIREMENT.
3. REFER TO SCHEDULE FOR REFRIGERATOR, KITCHEN SINK, DISHWASHER, ELECTRIC RANGE & HOOD ABOVE. REFER TO ENGINEER'S DRAWINGS FOR VENT REQUIREMENT.
4. WOOD BASE CABINETS AND SOLID STONE COUNTERTOP. SEE INT. ELEVATION.
5. WOOD UPPER CABINETS. SEE INT. ELEVATION.
6. FULL HEIGHT TILE BACKSPLASH. REFER TO FINISH SCHEDULE.
7. NOT USED.
8. MANUFACTURED TUB AND SHOWER ENCLOSURE. INSTALL AS PER MFR'S SPECIFICATION.
9. VANITY SINK, SEE PLUMBING FIXTURE SCHEDULE. PROVIDE WOOD VANITY W/ 4" BACKSPLASH. PROVIDE MIRROR ABOVE.
10. CHANGE IN FLOOR MATERIALS, SEE FINISH SCHEDULE
11. INSTALL WOOD BLOCKING(S) IN WALL AT TOILET AND BATHTUB LOCATIONS FOR FUTURE GRAB BAR. REFER TO DETAIL 4 & 5 ON A-105.

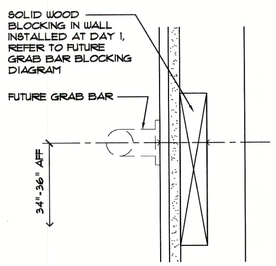

5 FUTURE GRAB BAR BLOCKING DETAIL

SCALE: 3" = 1'-0"

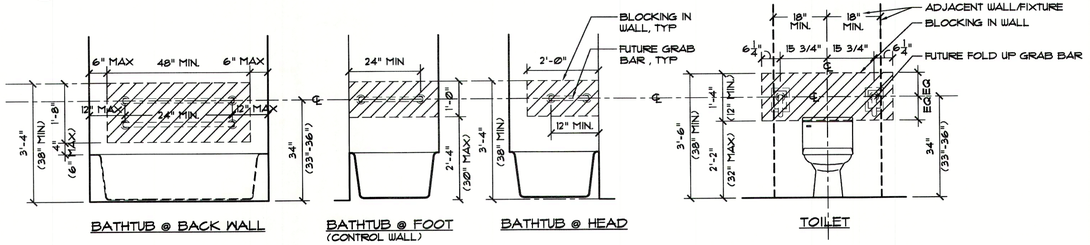

BATHTUB @ BACK WALL | BATHTUB @ FOOT (CONTROL WALL) | BATHTUB @ HEAD | TOILET

4 FUTURE GRAB BAR BLOCKING DIAGRAM

SCALE: 1/2" = 1'-0"

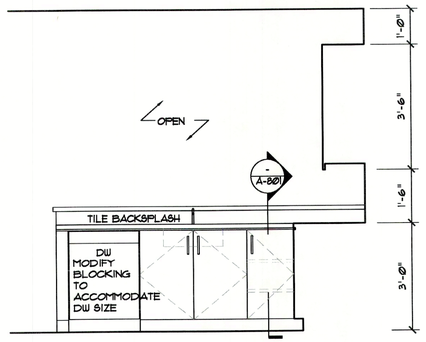

2 INT. ELEVATION @ KITCHEN

SCALE: 1/2" = 1'-0"

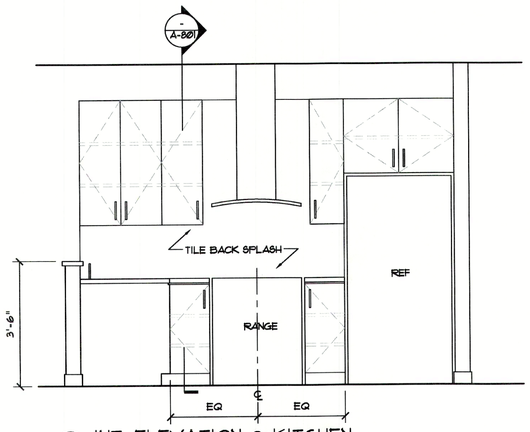

3 INT. ELEVATION @ KITCHEN

SCALE: 1/2" = 1'-0"

DOOR SCHEDULE

REFER TO A-900 FOR DOOR NOTES, ELEVATIONS, HARDWARE SCHEDULE, ETC.

APT. UNIT NUMBER	DOOR NUMBER	DOOR TYPE	DOOR MATERIAL	DOOR SIZE WIDTH	DOOR SIZE HEIGHT	DOOR THICKNESS	DOOR HAND	DOOR UNDERCUT AFF.	FRAME TYPE	FRAME MATERIAL	FRAME THICKNESS	HARDWARE	RATING	REMARKS
UNIT 2G, 3G	01	F	HM-16GA	(1) 3'-0"	x7'-0"	1 3/4"		3/8"	A	WHM-16GA		H8	45 MIN	
	02	F	WD	(2) 2'-0"	x7'-0"	1 3/4"		3/8"	A	WD		H12	-	
	03	F	WD	(2) 3'-0"	x7'-0"	1 3/4"		3/8"	A	WD		H12	-	
	04	F	WD	(1) 3'-0"	x7'-0"	1 3/4"		3/8"	A	WD		H9	-	
	05	F	WD	(1) 3'-0"	x7'-0"	1 3/4"		3/8"	A	WD		H9	-	
	06	F	WD	(1) 3'-0"	x7'-0"	1 3/4"		3/8"	A	WD		H10	-	
	07	A	HM-16GA	(1) 3'-0"	x7'-0"	1 3/4"		3/8"	A	WHM-16GA		H7	45 MIN	1
UNIT 2H, 3H	01	F	HM-16GA	(1) 3'-0"	x7'-0"	1 3/4"		3/8"	A	WHM-16GA		H8	45 MIN	
	02	F	WD	(1) 2'-0"	x7'-0"	1 3/4"		3/8"	A	WD		H11	-	
	03	F	WD	(2) 3'-0"	x7'-0"	1 3/4"		3/8"	A	WD		H12	-	
	04	F	WD	(1) 3'-0"	x7'-0"	1 3/4"		3/8"	A	WD		H9	-	
	05	F	WD	(1) 3'-0"	x7'-0"	1 3/4"		3/8"	A	WD		H9	-	
	06	F	WD	(1) 3'-0"	x7'-0"	1 3/4"		3/8"	A	WD		H10	-	
	07	A	HM-16GA	(1) 3'-0"	x7'-0"	1 3/4"		3/8"	A	WHM-16GA		H7	45 MIN	1

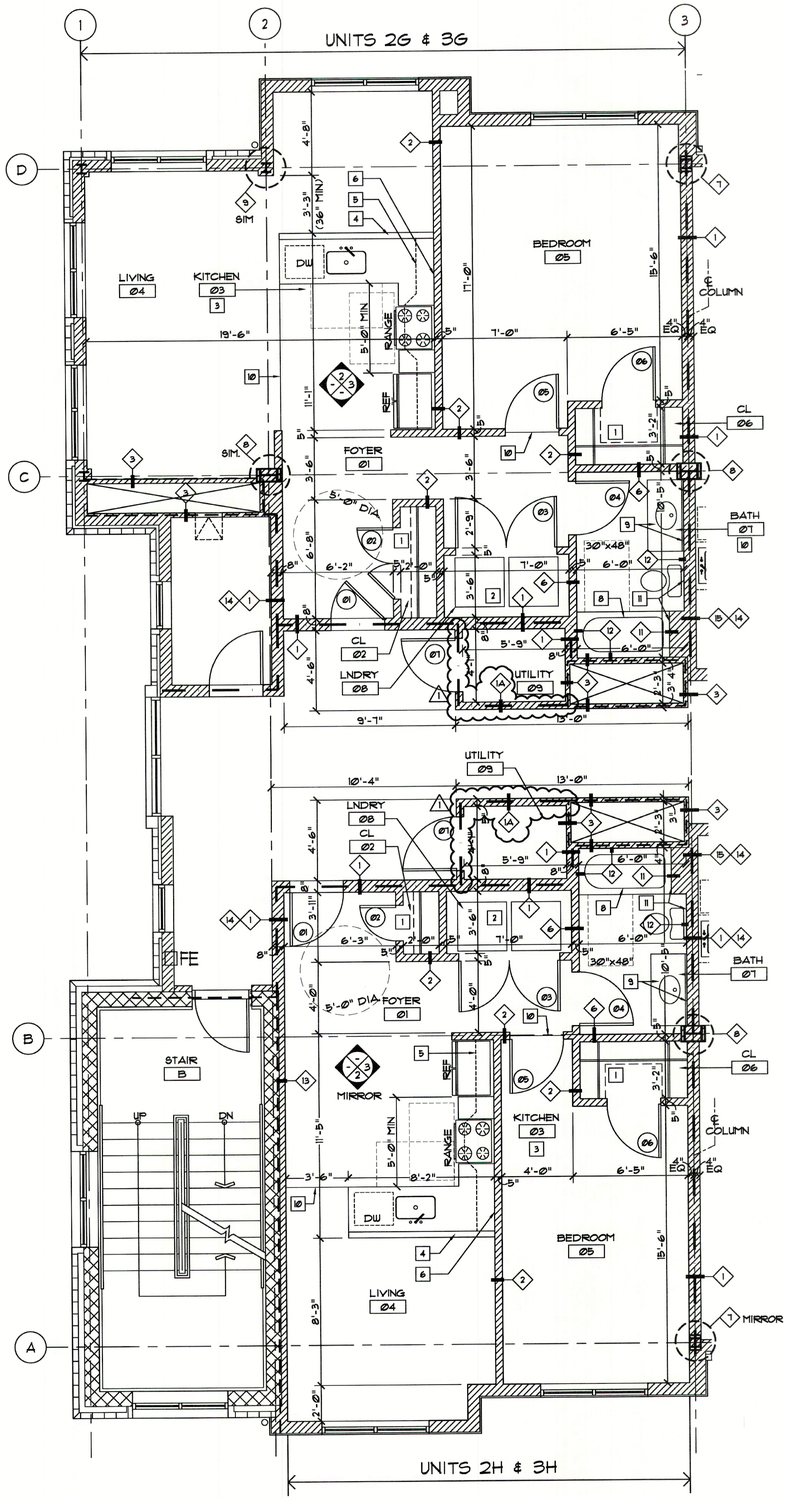

1 TYP. APARTMENT UNIT ENLARGED CONSTRUCTION PLAN

SCALE: 1/4" = 1'-0"

LIBERTY PLAZA SUITES

500 COMMERCE STREET
HAWTHORNE, NY 10532

ARCHITECT

dimovski architecture
59 Kensico Road, Thornwood, NY 10594
(914) 747-3500 | (914) 747-3588 fax
www.dimovskiarchitecture.com

STRUCTURAL ENGINEER

CHARLES A. MANGANARO
CONSULTING ENGINEERS
A PROFESSIONAL CORPORATION
303 SOUTH BROADWAY, SUITE 223, TARRYTOWN, NY 10591-5488
SHAILESH R. NAIK, P.E.
NEW YORK LICENSE No. 072797-1

MEP ENGINEER

OLA Consulting Engineers
50 Broadway
Hawthorne, NY 10532
914.747.3500
8 West 38th Street, Suite 501
New York, NY 10018
646.848.4110
olace.com

NO.	REVISION/ISSUE	DATE
3	ISSUE FOR DOB COMMENT 1	04/26/2021
2	ISSUE FOR PRICING	03/16/2021
1	ISSUE FOR PERMIT	03/12/2021

SEAL

REGISTERED ARCHITECT PAULETTE DIMOVSKI 032361 STATE OF NEW YORK

PROJECT

LIBERTY PLAZA SUITES
500 COMMERCE ST.
TOWN OF MT. PLEASANT, NY

DATE:	AUGUST 12, 2020
PROJECT NO:	DA 2034
DRAWN BY:	YK
CHECKED BY:	PD/SGD
SCALE:	AS NOTED

DRAWING TITLE

APT. UNIT ENLARGED CONSTRUCTION PLANS & DR. SCHEDULE (UNITS 2G, 2H, 3G & 3H)

SHEET NO.

A-105

LEGEND

- ONE HOUR FIRE BARRIER WALL
- ONE HOUR FIRE RATED WALL

NOTES

REFER TO A-101 FOR GENERAL NOTES & LEGEND

CONSTRUCTION NOTES "-"

1. CLOSET ROD AND (2) FIXED SHELVES ABOVE AT ALL CLOSETS U.O.N.
2. WASHER AND ELECTRIC DRYER, SEE APPLIANCE SCHEDULE. REFER TO ENGINEER'S DRAWINGS FOR VENT REQUIREMENT.
3. REFER TO SCHEDULE FOR REFRIGERATOR, KITCHEN SINK, DISHWASHER, ELECTRIC RANGE & HOOD ABOVE. REFER TO ENGINEER'S DRAWINGS FOR VENT REQUIREMENT.
4. WOOD BASE CABINETS AND SOLID STONE COUNTERTOP. SEE INT. ELEVATION.
5. WOOD UPPER CABINETS. SEE INT. ELEVATION.
6. FULL HEIGHT TILE BACKSPLASH. REFER TO FINISH SCHEDULE.
7. NOT USED.
8. MANUFACTURED TUB AND SHOWER ENCLOSURE. INSTALL AS PER MFR'S SPECIFICATION.
9. VANITY SINK, SEE PLUMBING FIXTURE SCHEDULE. PROVIDE WOOD VANITY W/ 4" BACKSPLASH. PROVIDE MIRROR ABOVE.
10. CHANGE IN FLOOR MATERIALS, SEE FINISH SCHEDULE
11. INSTALL WOOD BLOCKING(S) IN WALL AT TOILET AND BATHTUB LOCATIONS FOR FUTURE GRAB BAR. REFER TO DETAIL 4 & 5 ON A-105.

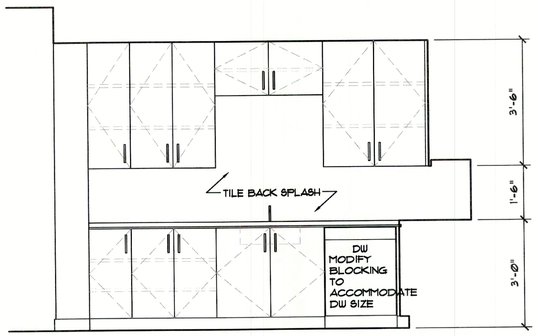

3 INT. ELEVATION @ KITCHEN

SCALE: 1/2" = 1'-0"

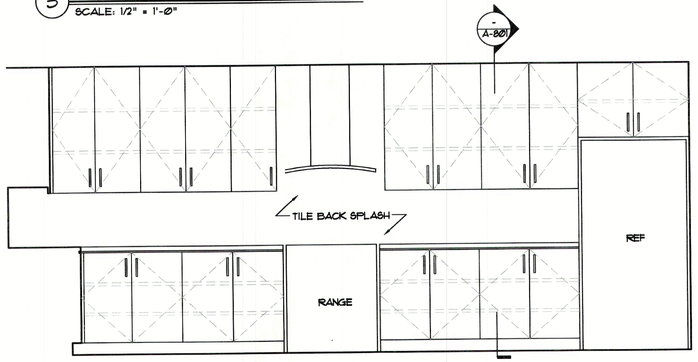

4 INT. ELEVATION @ KITCHEN

SCALE: 1/2" = 1'-0"

DOOR SCHEDULE

REFER TO A-300 FOR DOOR NOTES, ELEVATIONS, HARDWARE SCHEDULE, ETC.

APT. UNIT NUMBER	DOOR NUMBER	DOOR TYPE	DOOR MATERIAL	DOOR SIZE WIDTH	DOOR SIZE HEIGHT	DOOR THICKNESS	DOOR HAND	DOOR UNDERCUT ABV. FIN. FLR.	FRAME TYPE	FRAME MATERIAL	FRAME THICKNESS	HARDWARE	RATING	REMARKS
UNIT 2D, 2E, 2F UNIT 3D, 3E, 3F	01	F	HM-16GA	(1) 3'-0"	x7'-0"	1 3/4"		3/8"	A	WHM-16GA		H8	45 MIN	
	02	F	WD	(2) 2'-0"	x7'-0"	1 3/4"		3/8"	B	WD		H12	-	
	03	F	WD	(1) 3'-0"	x7'-0"	1 3/4"		3/8"	A	WD		H3	-	
	04	F	WD	(1) 3'-0"	x7'-0"	1 3/4"		3/8"	A	WD		H10	-	
	05	F	WD	(1) 3'-0"	x7'-0"	1 3/4"		3/8"	A	WD		H3	-	
	06	F	WD	(1) 3'-0"	x7'-0"	1 3/4"		3/8"	A	WD		H10	-	
	07	F	WD	(1) 3'-0"	x7'-0"	1 3/4"		3/8"	A	WD		H3	-	
	08	F	WD	(2) 3'-0"	x7'-0"	1 3/4"		3/8"	B	WD		H12	-	
	09	A	HM-16GA	(1) 3'-0"	x7'-0"	1 3/4"		3/8"	A	WHM-16GA		H7	45 MIN	1
UNIT 2A, 2B, 2C UNIT 3A, 3B, 3C	01	F	HM-16GA	(1) 3'-0"	x7'-0"	1 3/4"		3/8"	A	WHM-16GA		H8	45 MIN	
	02	F	WD	(2) 2'-0"	x7'-0"	1 3/4"		3/8"	B	WD		H12	-	
	03	F	WD	(1) 3'-0"	x7'-0"	1 3/4"		3/8"	A	WD		H3	-	
	04	F	WD	(1) 3'-0"	x7'-0"	1 3/4"		3/8"	A	WD		H10	-	
	05	F	WD	(1) 3'-0"	x7'-0"	1 3/4"		3/8"	A	WD		H3	-	
	06	F	WD	(1) 3'-0"	x7'-0"	1 3/4"		3/8"	A	WD		H10	-	
	07	F	WD	(1) 3'-0"	x7'-0"	1 3/4"		3/8"	A	WD		H3	-	
	08	F	WD	(2) 3'-0"	x7'-0"	1 3/4"		3/8"	B	WD		H12		
	09	A	HM-16GA	(1) 3'-0"	x7'-0"	1 3/4"		3/8"	A	WHM-16GA		H7	45 MIN	1

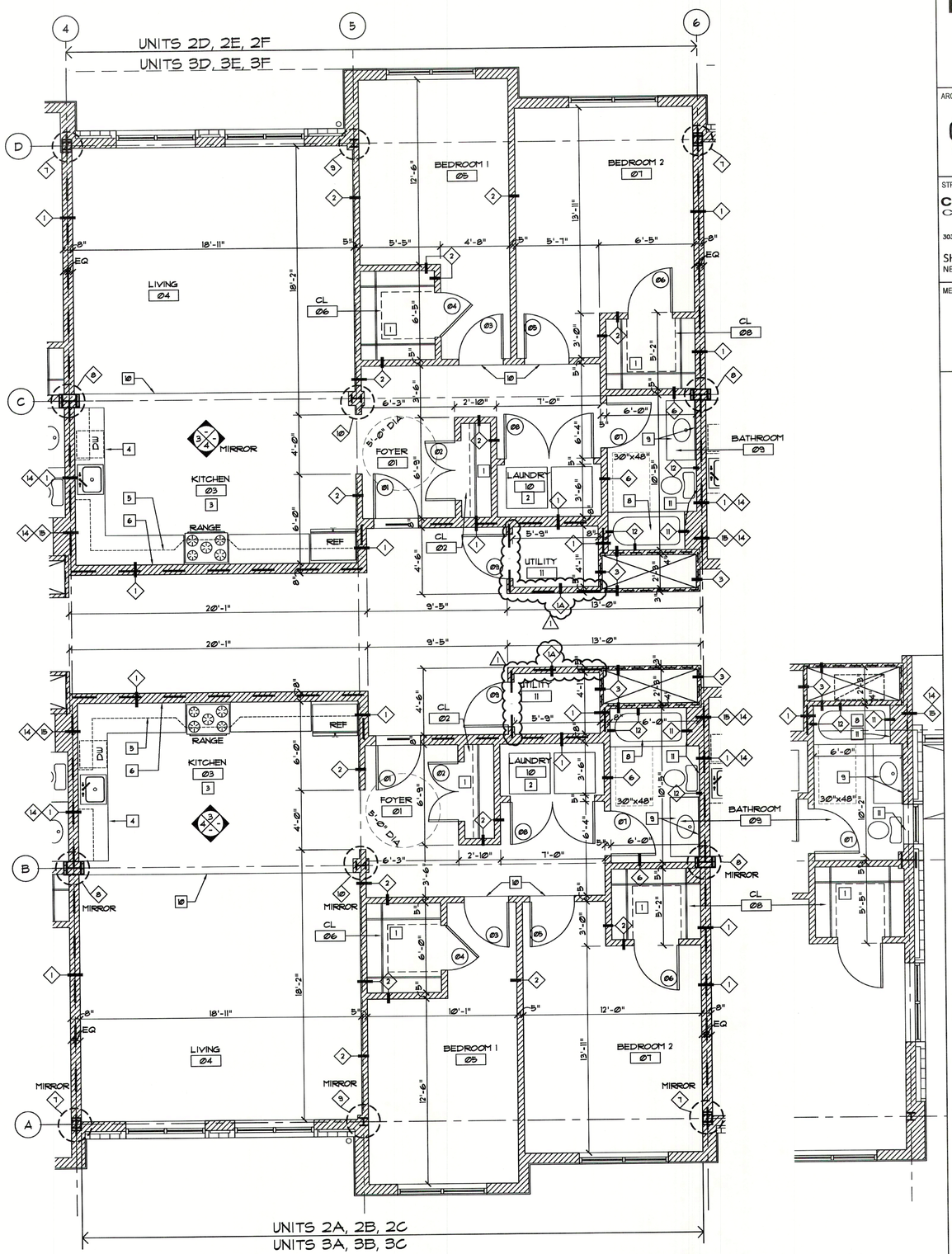

1 TYP. APARTMENT UNIT ENLARGED CONSTRUCTION PLAN

SCALE: 1/4" = 1'-0"

2 TYPICAL PARTIAL 2A & 3A APARTMENT UNIT ENLARGED PLAN

SCALE: 1/4" = 1'-0"

LIBERTY PLAZA SUITES

500 COMMERCE STREET
HAWTHORNE, NY 10532

ARCHITECT

dimovski architecture
59 Kensico Road, Thornwood, NY 10594
(914) 747-3500 | (914) 747-3588 fax
www.dimovskiarchitecture.com

STRUCTURAL ENGINEER

CHARLES A. MANGANARO
CONSULTING ENGINEERS
A PROFESSIONAL CORPORATION
303 SOUTH BROADWAY, SUITE 223, TARRYTOWN, NY 10591-5488

SHAILESH R. NAIK, P.E.
NEW YORK LICENSE No. 072797-1

MEP ENGINEER

CLA Consulting Engineers
50 Broadway
Hawthorne, NY 10532
914.747.3800
8 West 38th Street,
Suite 501
New York, NY 10018
646.848.4110
clace.com

NO.	REVISION/ISSUE	DATE
3	ISSUE FOR DOB COMMENT 1	04/26/2021
2	ISSUE FOR PRICING	03/16/2021
1	ISSUE FOR PERMIT	03/12/2021

SEAL

REGISTERED ARCHITECT JULIETTE DIMOVSKI 032180 STATE OF NEW YORK

PROJECT

LIBERTY PLAZA SUITES
500 COMMERCE ST.
TOWN OF MT. PLEASANT, NY

DATE:	AUGUST 12, 2020
PROJECT NO:	DA 2034
DRAWN BY:	YK
CHECKED BY:	PD/SGD
SCALE:	AS NOTED

DRAWING TITLE

APT. UNIT ENLARGED CONSTRUCTION PLANS & DR. SCHEDULE (UNITS 2A, 2B, 2C, 2D, 2E, 2F & 3A, 3B, 3C, 3D, 3E, 3F)

SHEET NO.

A-106

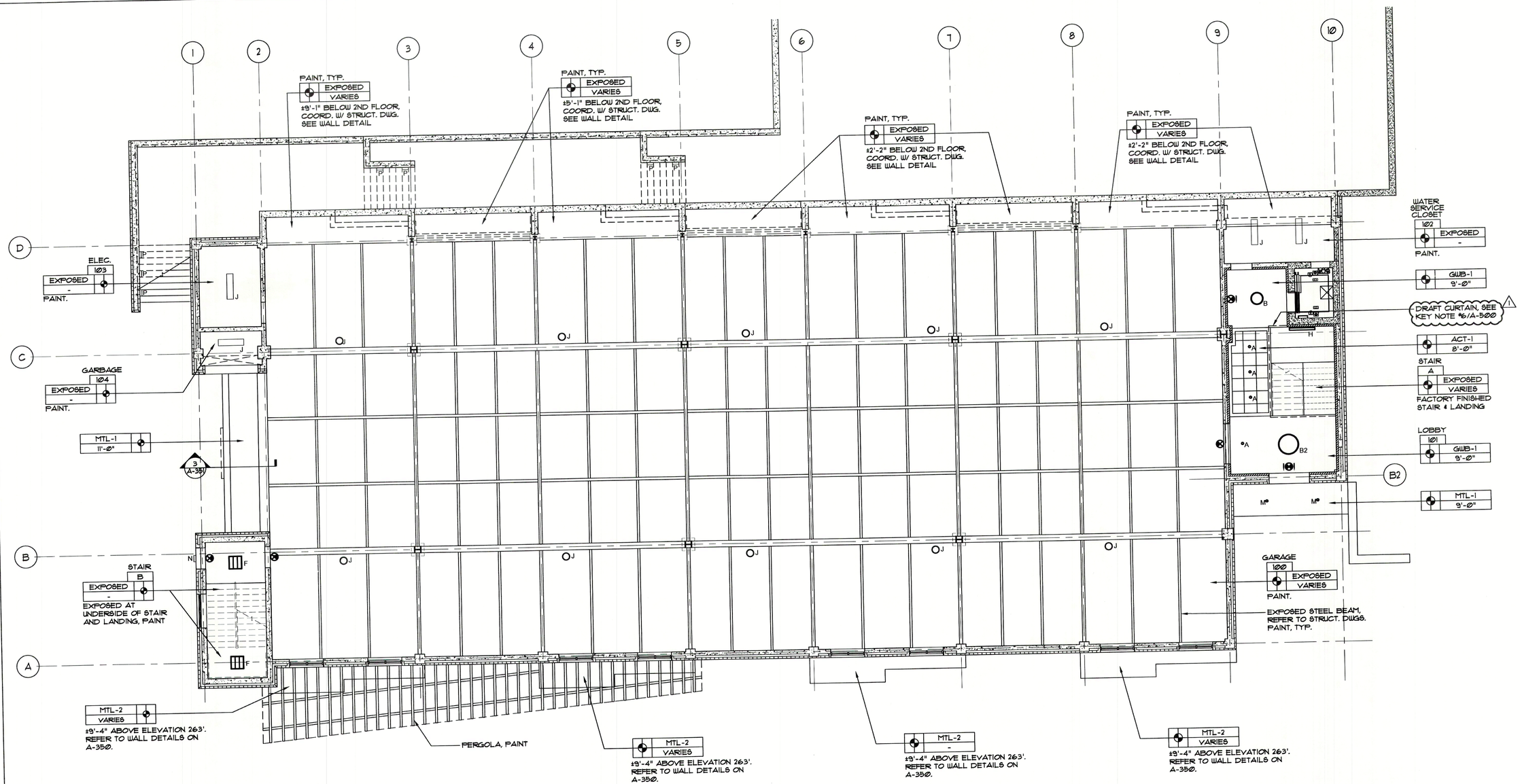

1 GROUND FLOOR (1ST LEVEL) RCP

SCALE: 1/8" = 1'-0"

RCP GENERAL NOTES

1. REFER TO ELECTRICAL DRAWINGS FOR FIXTURE SCHEDULE, OCCUPANCY SENSOR, EMERGENCY LIGHTS, DIFFUSERS, ETC.
2. REFER TO ENGINEER'S DRAWINGS FOR DIMMABLE LIGHTS.

LIBERTY PLAZA SUITES

500 COMMERCE STREET
HAWTHORNE, NY 10532

ARCHITECT

dimovski architecture
59 Kensico Road, Thornwood, NY 10594
(914) 747-3500 | (914) 747-3588 fax
www.dimovskiarchitecture.com

STRUCTURAL ENGINEER

CHARLES A. MANGANARO
CONSULTING ENGINEERS
A PROFESSIONAL CORPORATION
303 SOUTH BROADWAY, SUITE 223, TARRYTOWN, NY 10591-5488

SHAILESH R. NAIK, P.E.
NEW YORK LICENSE No. 072797-1

MEP ENGINEER

CLA Consulting Engineers
50 Broadway, Hawthorne, NY 10532
914.747.2800
8 West 38th Street, Suite 901
New York, NY 10018
646.646.4110
clace.com

NO.	REVISION/ISSUE	DATE
3	ISSUE FOR DOB COMMENT 1	04/26/2021
2	ISSUE FOR PRICING	03/16/2021
1	ISSUE FOR PERMIT	03/12/2021

SEAL

REGISTERED ARCHITECT PAULETTE DIMOVSKI 032161 STATE OF NEW YORK

PROJECT

LIBERTY PLAZA SUITES
500 COMMERCE ST.
TOWN OF MT. PLEASANT, NY

DATE:	AUGUST 12, 2020
PROJECT NO:	DA 2034
DRAWN BY:	YK
CHECKED BY:	PD/SGD
SCALE:	AS NOTED

DRAWING TITLE

FIRST FLOOR (GARAGE LEVEL) RCP

SHEET NO.

A-151

RCP GENERAL NOTES

1. REFER TO A-151

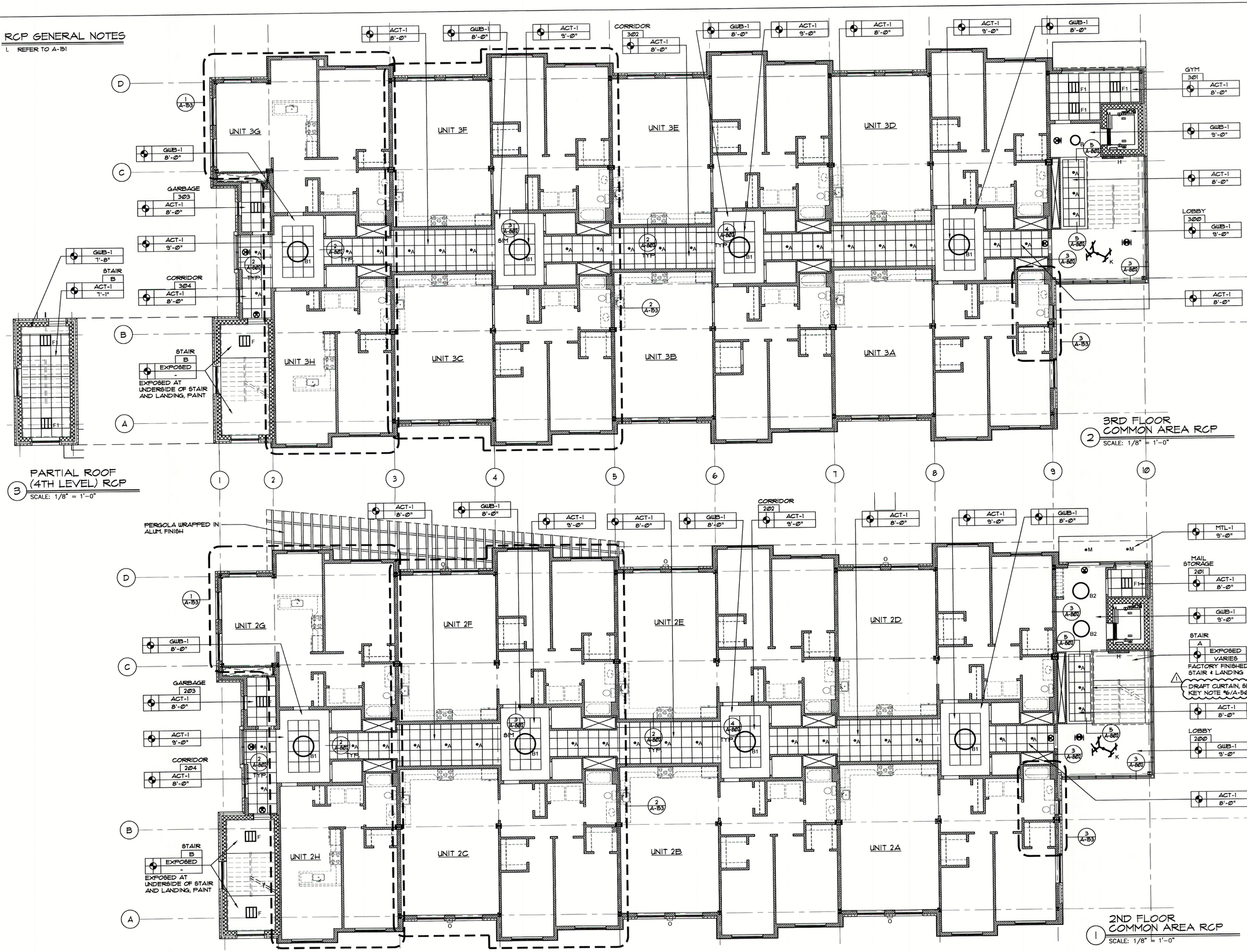

3 PARTIAL ROOF (4TH LEVEL) RCP
SCALE: 1/8" = 1'-0"

2 3RD FLOOR COMMON AREA RCP
SCALE: 1/8" = 1'-0"

1 2ND FLOOR COMMON AREA RCP
SCALE: 1/8" = 1'-0"

LIBERTY PLAZA SUITES

500 COMMERCE STREET
HAWTHORNE, NY 10532

ARCHITECT

dimovski architecture PLLC
59 Kensico Road, Thornwood, NY 10594
(914) 747-3500 | (914) 747-3588 fax
www.dimovskiarchitecture.com

STRUCTURAL ENGINEER

CHARLES A. MANGANARO CONSULTING ENGINEERS
A PROFESSIONAL CORPORATION
303 SOUTH BROADWAY, SUITE 223, TARRYTOWN, NY 10591-5488
SHAILESH R. NAIK, P.E.
NEW YORK LICENSE No. 072797-1

MEP ENGINEER

OLA Consulting Engineers
50 Broadway, Hawthorne, NY 10532
914.747.3500
8 West 38th Street, Suite 501, New York, NY 10018
646.946.4110
olace.com

NO.	REVISION/ISSUE	DATE
3	ISSUE FOR DOB COMMENT	04/26/2021
2	ISSUE FOR PRICING	03/16/2021
1	ISSUE FOR PERMIT	03/12/2021

SEAL

REGISTERED ARCHITECT JULIETTE DIMOVSKI 032580 STATE OF NEW YORK

PROJECT

LIBERTY PLAZA SUITES
500 COMMERCE ST.
TOWN OF MT. PLEASANT, NY

DATE:	AUGUST 12, 2020
PROJECT NO:	DA 2034
DRAWN BY:	YK
CHECKED BY:	PD/SGD
SCALE:	AS NOTED

DRAWING TITLE

2ND FLOOR & 3RD FLOOR RCP

SHEET NO.

A-152

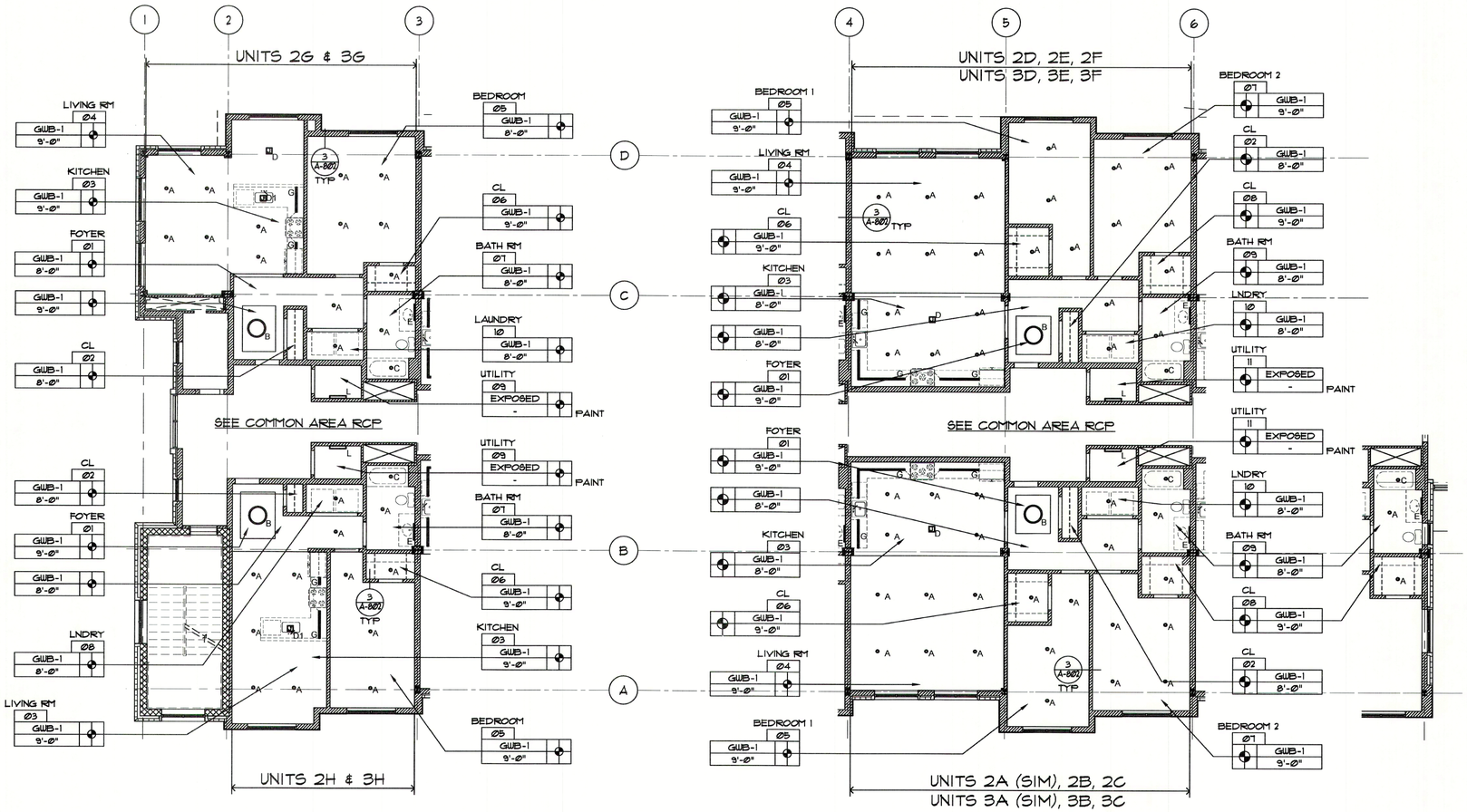

1 TYPICAL APARTMENT UNIT RCP - PARTIAL
SCALE: 1/8" = 1'-0"

2 TYPICAL APARTMENT UNIT RCP - PARTIAL
SCALE: 1/8" = 1'-0"

3 PORTION OF 2A & 3A APARTMENT UNIT RCP
SCALE: 1/8" = 1'-0"

RCP GENERAL NOTES

1. REFER TO A-151

APARTMENT UNIT RCP NOTES

1. AT ALL APARTMENT UNITS, PROVIDE CEILING ACCESS PANEL IF REQUIRED PER MEP ENGINEER'S REQUIREMENTS. COORDINATE SIZE AND LOCATION W/ ENGINEER'S DRAWINGS. CONFIRM W/ ARCHITECT PRIOR TO INSTALLATION.

LIBERTY PLAZA SUITES

500 COMMERCE STREET
HAWTHORNE, NY 10532

ARCHITECT
dimovski architecture p.l.l.c.
59 Kensico Road, Thornwood, NY 10594
(914) 747-3500 | (914) 747-3588 fax
www.dimovskiarchitecture.com

STRUCTURAL ENGINEER
CHARLES A. MANGANARO
CONSULTING ENGINEERS
A PROFESSIONAL CORPORATION
303 SOUTH BROADWAY, SUITE 223, TARRYTOWN, NY 10591-5488
SHAILESH R. NAIK, P.E.
NEW YORK LICENSE No. 072797-1

MEP ENGINEER
OLA Consulting Engineers
50 Broadway
Hawthorne, NY 10532
914.747.2800
8 West 38th Street,
Suite 501
New York, NY 10018
646.848.4110
ola-ca.com

NO.	REVISION/ISSUE	DATE
1	ISSUE FOR PERMIT	03/12/2021

SEAL
REGISTERED ARCHITECT
JULIETTE DIMOVSKI
032161
STATE OF NEW YORK

PROJECT
LIBERTY PLAZA SUITES
500 COMMERCE ST.
TOWN OF MT. PLEASANT, NY

DATE:	AUGUST 12, 2020
PROJECT NO:	DA 2034
DRAWN BY:	YK
CHECKED BY:	PD/SGD
SCALE:	AS NOTED

DRAWING TITLE
TYPICAL APT. UNIT RCP

SHEET NO.
A-153

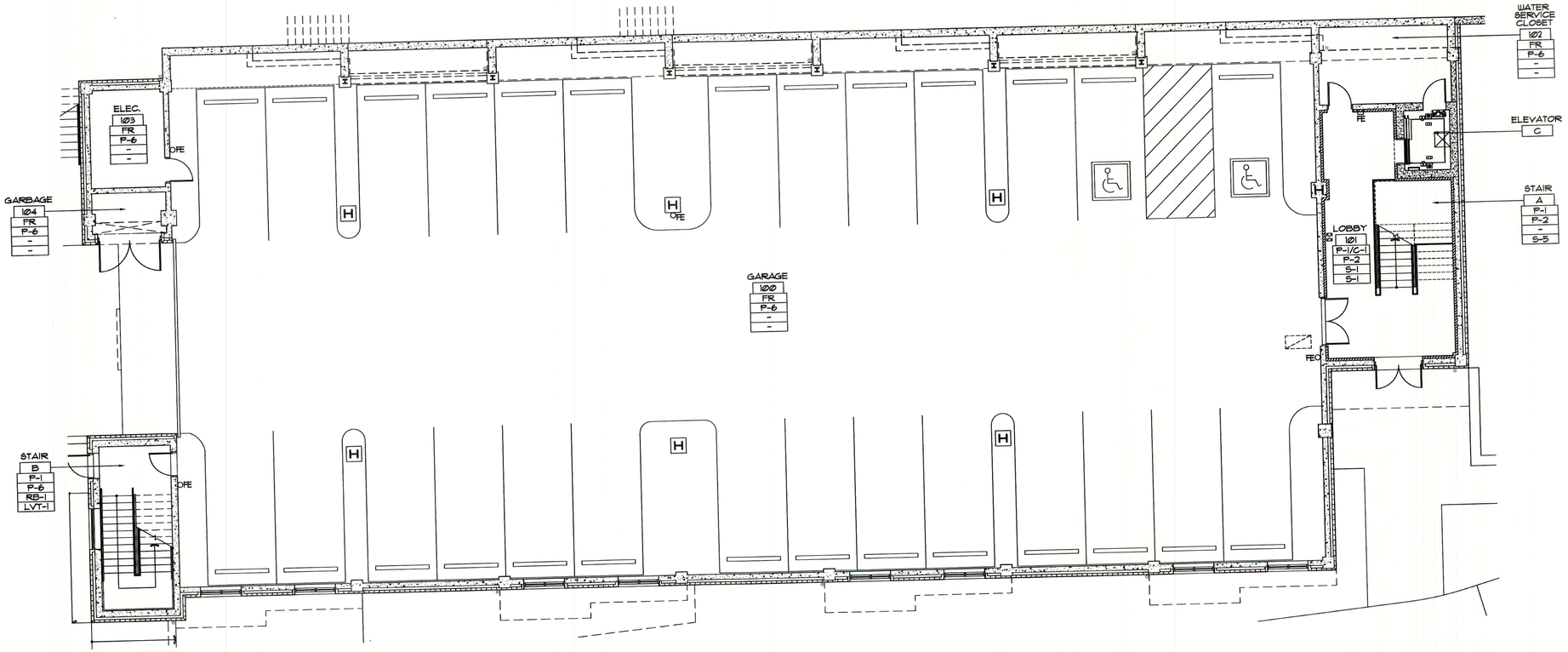

1 FIRST FLOOR FINISH PLAN (GARAGE LEVEL)
SCALE: 1/8" = 1'-0"

FINISH SYMBOL

CEILING FINISH — –
WALL FINISH — –
BASE FINISH — –
FLOOR FINISH — –

FINISH TYPE AND SPECIFICATION x–x

PAINT FINISH, TYP

WALLS: SATIN
CEILINGS: FLAT
DOORS/FRAMES: SATIN
SPECIALTY: PEARL
METAL: ELECTROSTATICALLY PAINTED, TYP.

C CEILING
CQ CARPET QUALITY
VCT VINYL FLOORING
GL GLASS
P PAINT
RB RUBBER BASE
S STONE
W WOOD
WC WALL COVERING
WT WINDOW TREATMENT
SP SPECIALTY FINISH

⧗ INDICATES FLOOR MATERIAL CHANGE. PROVIDE TRANSITION STRIP DUE TO MATERIAL CHANGE AND ELEVATION CHANGE

FR FIRE RATED/SPRAY INSULATION

WD POPLAR WOOD TRIM: F&I AND PAINT WOOD BASE, DOOR TRIM, AND CROWN THROUGHOUT DWELLING UNITS, TYP.

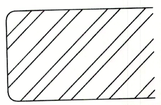

S-1 SQUARE EDGE PROFILE AT COUNTERTOP, TYP.

INTERIOR FINISH SCHEDULE

Item	Manufacturer	Description	Model #	Notes	Finish/Color
C-1	Armstrong	Acoustical Ceiling Tile	1942 Ultima 9/16" Beveled Tegular	24" x 24" x 7/8" Order with Suprafine 9/16" Suspension System	White
CQ-1	Shaw Contract	Carpet Tile	Assembly: ESTABLISH 5T268	Staggered Pattern, 50% quantity variations; Provide 6" carpet base to match Interaction 67515.	Interaction 67515; Clear Interaction 67518
LVT-1	Shaw Contract	Luxury Vinyl Tile	Unite: COVE 0927V	Staggered Pattern, 50% quantity variations.	Silt 27504; Pour 27530
LVT-2	Shaw Contract	Luxury Vinyl Tile	Inlet 0926V	Staggered Pattern; Herringbone Pattern at Dwelling Unit Entry*	V3 Thatch 26720
RF-1	Rubber Flooring, Inc.	Gym Flooring	3/8" Heavy Duty Rubber Rolls	Install seamlessly throughout gym.	Blue Gray - 10%
WC-1	DesignTex	Wall Covering	Luxe 6545	-	6545-402 Ink
WC-2	DesignTex	Wall Covering	Luxe 6545	-	6545-804 Mercury
RB-1	Johnsonite	Rubber Base	6" High Rubber Base	Cove at Vinyl Flooring; Straight at Carpet Flooring, unless otherwise noted.	48-Grey
WT-1	Mecho Shade	Window Treatment	SoHo Collection; 1100 Series	Manual Roller Shades, field verify for installation and panel sizes.	1115 Smoke
P-1	Sherwin Williams	Paint-ceiling	2 Coats: A86W01151 SuperPaint Flat, A86 Series	Provide B28W08000 PVA Drywall Primer & Sealer White.	Extra White SW-7006
P-2	Sherwin Williams	Paint-wall (general)	2 Coats: K27W00051 Emerald Designer Edition, Interior Latex Satin	Provide B28W08000 PVA Drywall Primer & Sealer White.	Zircon SW-7667
P-3	Sherwin Williams	Paint-trim and doors	2 Coats: K38W01751 Emerald Urethane trim Enamel, Satin	Provide B28W08111 Premium Wall & Wood Primer, Interior Latex White; For Electrostatically painted metal (i.e. elevator doors and trim) use Primer: B51W00620 Preprite ProBlock Primer & Sealer White; For Steel/Ferrous Metal Use Primer B66W01310 PI ProCryl Universal Acrylic Primer.	March Wind SW-7668
P-4	Sherwin Williams	All Millwork Cabinetry	Custom Sprayed Finish by Millworker	Refer to Millwork Details	Summit Gray SW-7669
P-5	Sherwin Williams	Paint-accent walls	2 Coats: K27W00051 Emerald Designer Edition, Interior Latex Satin	Provide B28W08000 PVA Drywall Primer & Sealer White.	TBS
P-6	Sherwin Williams	Concrete Walls	CONFLEX SHERLASTIC Elastomeric Coating, CF16W0051 Extra White CF16W0053 Deep Base	Provide LOXON Concrete & Masonry Primer/Sealer, Interior/Exterior Latex US- LX02W0050 White Canada- LX02WQ050 White	Use tint: Zircon SW-7667
S-1	Porcelain Tile	Happy Floors	24" x 48" Crash Blue	Install with 3" x 24" Crash Blue Bullnose Base.	Natural Finish
S-2	Corian Quartz	Countertop and Backsplash	Course Carrara	Submit seaming diagram prior to fabrication.	As per Spec
S-3	Porcelain Tile	Happy Floors	12" x 24" Apollo Grey	Install with 3" x 24" Appolo Gray Bullnose Base.	Straight Lay Installation
S-4	Ceramic Tile	daltile	Polaris	Subway Pattern Installation.	Gloss White PL01
S-5	Angelozzi	Terralite Terrazzo	Precast Epoxy Terrazzo Treads	Refer Stair Details.	TBS
MTL-1	-	Metal	Exterior Grade Metal Ceiling	-	TBS
M-1	-	Mirror	Wall Mirror	-	TBS

APPLIANCE SCHEDULE

Type	Manufacturer	Description	Model #
A	GE Profile	36" Energy Star Counter-depth french Door Refrigerator	PWE23KSKSS
B	GE Profile	24" Dishwasher	PDT715SYNFS
C	GE Profile	30" Smart Slide-In Electric Range	PSS93YPFS
D	GE Profile	Series 30" Wall-Mount Hood	PV970NSS
E	GE Profile	2.2 Cu. Ft. Countertop Sensor Microwave Oven	PES7227SLSS
F	GE	4.6 Cu. Ft. Capacity Washer with FlexDispense	GTW725BPNDG
G	GE	7.4 Cu. Ft. Capacity Aluminized Alloy Drum Electric Dryer With HE Sensor Dry	GTD72EBPNDG

Each Resident Unit to have one of the above fixtures, typ.

HVAC
Gas Hydro Air heating and cooling at common areas. Resident Units to have individual Electric Heat Pump Split Systems for heating and cooling with supplemental baseboard heating at windows. Refer to MEP Engineer's Drawings.

PLUMBING FIXTURE SCHEDULE

Type	Manufacturer	Description	Model #
1	Kohlor	Crue Touchless pull-down single-handle kitchen faucet	K-22974-VS
2	Kohlor	Cairn Under-Mount Kitchen Sink	K-28001-CM6
3	Kohlor	Cimarron Comfort Height One-piece elongated 1.28 gpf chair height toilet	K-3619-0
4	Kohlor	Entity 60" x 30" alcove bath	K-26109-0
5	Kohlor	Ladena Bathroom Sink	K-2214-0
6	Kohlor	Hint widespread bathroom sink faucet	K-97093-4-BN
7	Kohlor	Pitch Rite-Temp® 1.75 gpm bath and shower trim	K-TS97074-4G-BN

LIBERTY PLAZA SUITES

500 COMMERCE STREET
HAWTHORNE, NY 10532

ARCHITECT
dimovski architecture PLLC
59 Kensico Road, Thornwood, NY 10594
(914) 747-3500 | (914) 747-3588 fax
www.dimovskiarchitecture.com

STRUCTURAL ENGINEER
CHARLES A. MANGANARO
CONSULTING ENGINEERS
A PROFESSIONAL CORPORATION
303 SOUTH BROADWAY, SUITE 223, TARRYTOWN, NY 10591-5488
SHAILESH R. NAIK, P.E.
NEW YORK LICENSE No. 072797-1

MEP ENGINEER
OLA Consulting Engineers
50 Broadway, Hawthorne, NY 10532 914.747.2800
9 West 38th Street, Suite 501 New York, NY 10018 646.845.4110
olace.com

NO.	REVISION/ISSUE	DATE
1	ISSUE FOR PERMIT	03/12/2021

SEAL
REGISTERED ARCHITECT JULIETTE DIMOVSKI 032561 STATE OF NEW YORK

PROJECT
LIBERTY PLAZA SUITES
500 COMMERCE ST.
TOWN OF MT. PLEASANT, NY

DATE:	AUGUST 12, 2020
PROJECT NO:	DA 2034
DRAWN BY:	YK
CHECKED BY:	PD/SGD
SCALE:	AS NOTED

DRAWING TITLE
1ST FLOOR (GARAGE LEVEL) FINISH PLAN AND SCHEDULES

SHEET NO.
A-171

NOTES

1. REFER TO A-171 FOR NOTES AND SCHEDULES

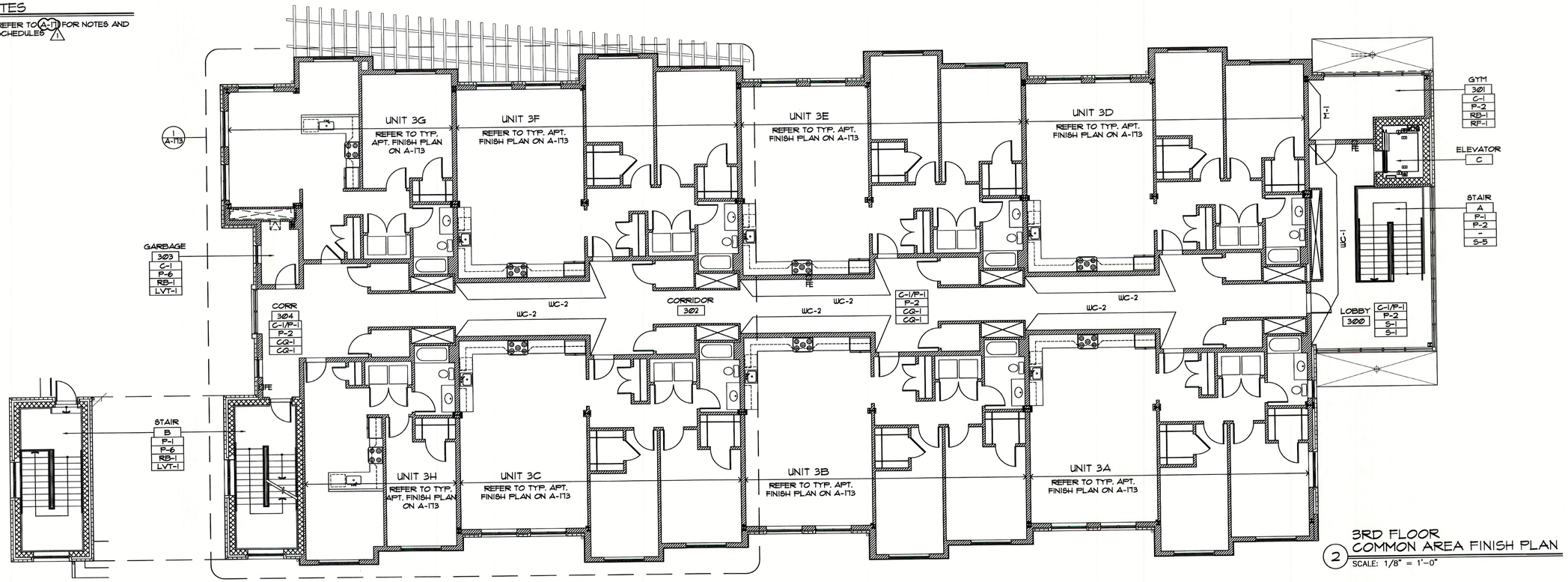

2 3RD FLOOR COMMON AREA FINISH PLAN
SCALE: 1/8" = 1'-0"

3 PARTIAL ROOF FINISH PLAN @ STAIR B
SCALE: 1/8" = 1'-0"

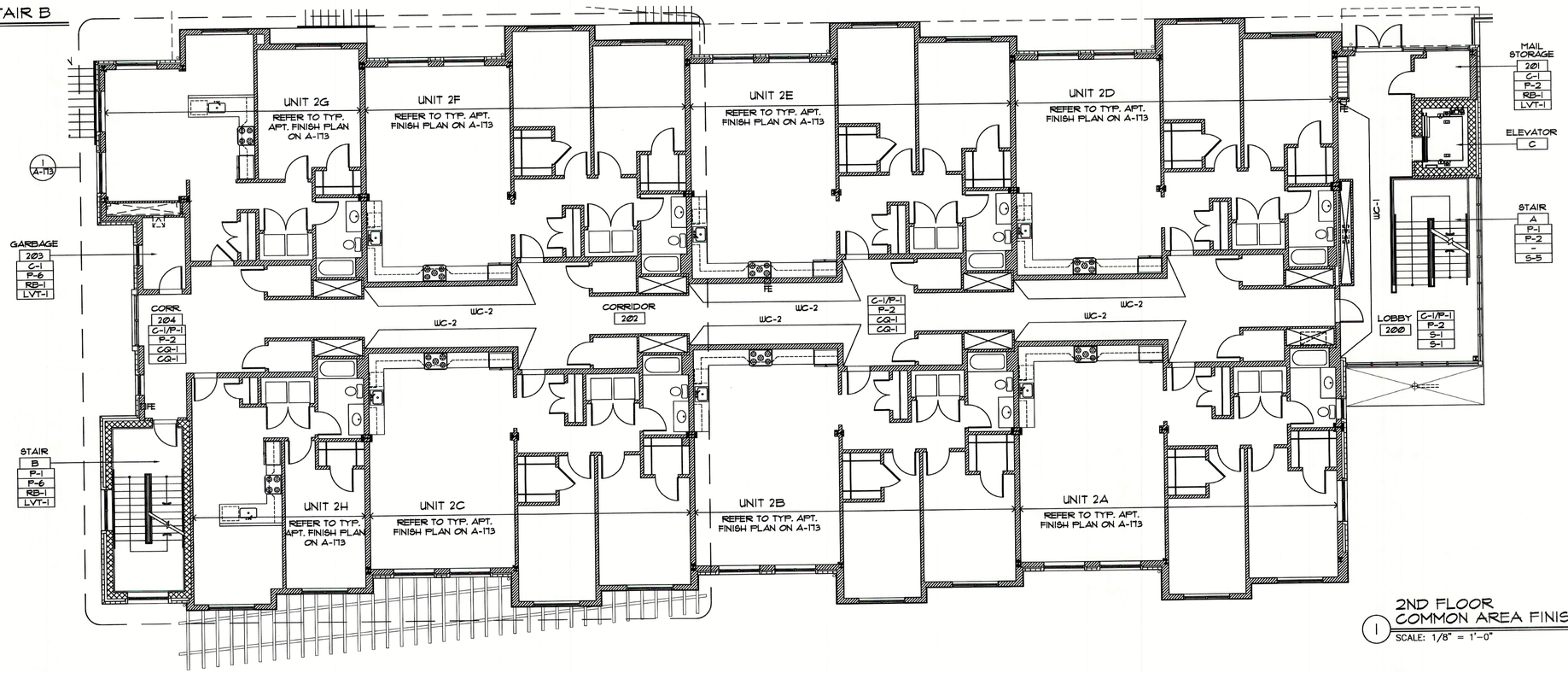

1 2ND FLOOR COMMON AREA FINISH PLAN
SCALE: 1/8" = 1'-0"

LIBERTY PLAZA SUITES

500 COMMERCE STREET
HAWTHORNE, NY 10532

ARCHITECT
dimovskiarchitecture
59 Kensico Road, Thornwood, NY 10594
(914) 747-3500 | (914) 747-3588 fax
www.dimovskiarchitecture.com

STRUCTURAL ENGINEER
CHARLES A. MANGANARO CONSULTING ENGINEERS
A PROFESSIONAL CORPORATION
303 SOUTH BROADWAY, SUITE 223, TARRYTOWN, NY 10591-5488
SHAILESH R. NAIK, P.E.
NEW YORK LICENSE No. 072797-1

MEP ENGINEER
OLA Consulting Engineers
50 Broadway, Hawthorne, NY 10532 914.747.3500
6 West 18th Street, Suite 501 New York, NY 10016 646.848.4110
olace.com

NO.	REVISION/ISSUE	DATE
3	ISSUE FOR DOB COMMENT	04/26/2021
2	ISSUE FOR PRICING	03/16/2021
1	ISSUE FOR PERMIT	03/12/2021

SEAL
REGISTERED ARCHITECT JULIETTE DIMOVSKI 032364 STATE OF NEW YORK

PROJECT
LIBERTY PLAZA SUITES
500 COMMERCE ST.
TOWN OF MT. PLEASANT, NY

DATE:	AUGUST 12, 2020
PROJECT NO:	DA 2034
DRAWN BY:	YK
CHECKED BY:	PD/SGD
SCALE:	AS NOTED

DRAWING TITLE
2ND FLOOR & 3RD FLOOR FINISH PLANS

SHEET NO.
A-172

NOTES

1. REFER TO A-171 FOR NOTES AND SCHEDULES

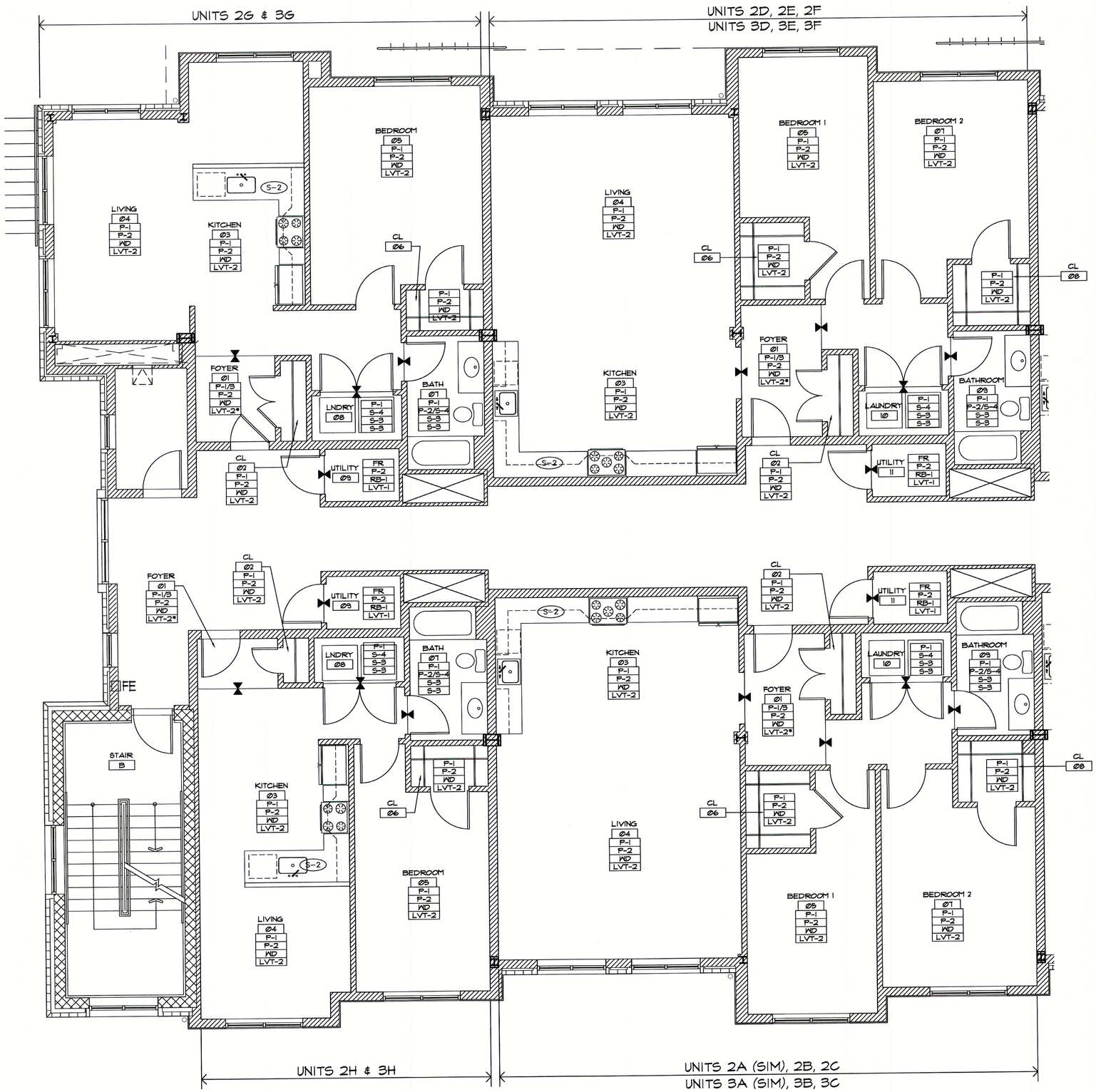

1 TYP. APARTMENT UNIT ENLARGED FINISH PLAN
SCALE: 1/4" = 1'-0"

LIBERTY PLAZA SUITES

500 COMMERCE STREET
HAWTHORNE, NY 10532

ARCHITECT

dimovski architecture
59 Kensico Road, Thornwood, NY 10594
(914) 747-3500 | (914) 747-3588 fax
www.dimovskiarchitecture.com

STRUCTURAL ENGINEER

CHARLES A. MANGANARO
CONSULTING ENGINEERS
A PROFESSIONAL CORPORATION
303 SOUTH BROADWAY, SUITE 223, TARRYTOWN, NY 10591-5488

SHAILESH R. NAIK, P.E.
NEW YORK LICENSE No. 072797-1

MEP ENGINEER

OLA Consulting Engineers
50 Broadway
Hawthorne, NY 10532
914.747.2800
6 West 39th Street,
Suite 501
New York, NY 10018
646.840.4110
ola-ce.com

NO.	REVISION/ISSUE	DATE
3	ISSUE FOR DOB COMMENT 1	04/26/2021
2	ISSUE FOR PRICING	03/16/2021
1	ISSUE FOR PERMIT	03/12/2021

SEAL

REGISTERED ARCHITECT JULIETTE DIMOVSKI 032161 STATE OF NEW YORK

PROJECT

LIBERTY PLAZA SUITES
500 COMMERCE ST.
TOWN OF MT. PLEASANT, NY

DATE:	AUGUST 12, 2020
PROJECT NO:	DA 2034
DRAWN BY:	YK
CHECKED BY:	PD/SGD
SCALE:	AS NOTED

DRAWING TITLE

TYPICAL APT. UNIT FINISH PLAN

SHEET NO.

A-173

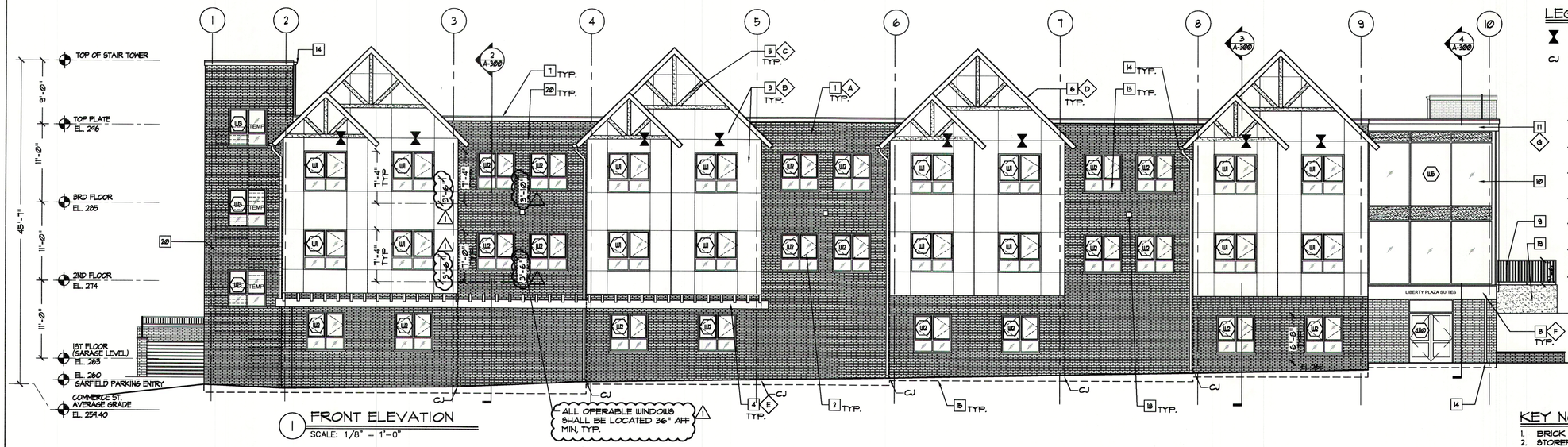

1 FRONT ELEVATION
SCALE: 1/8" = 1'-0"

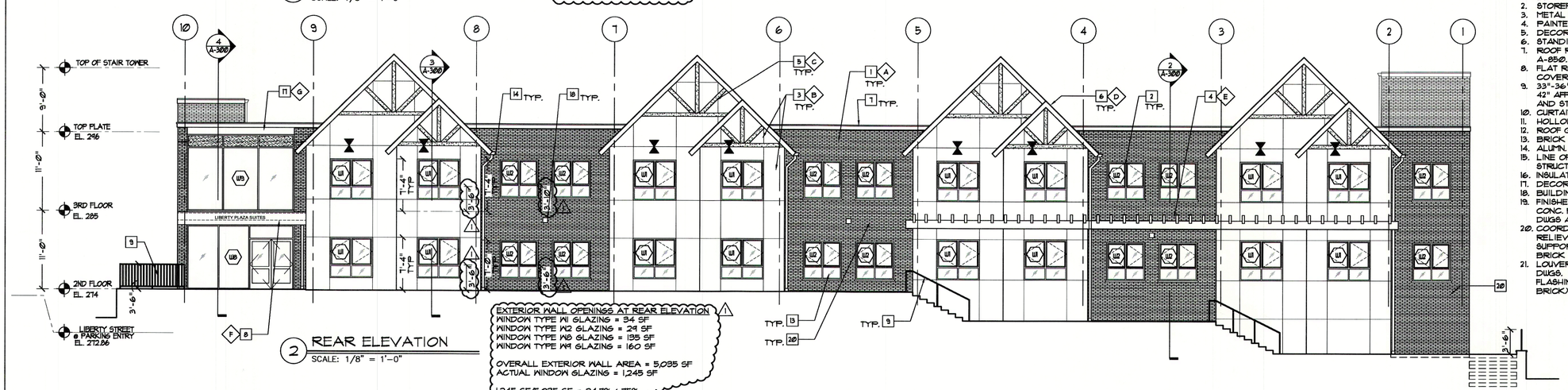

2 REAR ELEVATION
SCALE: 1/8" = 1'-0"

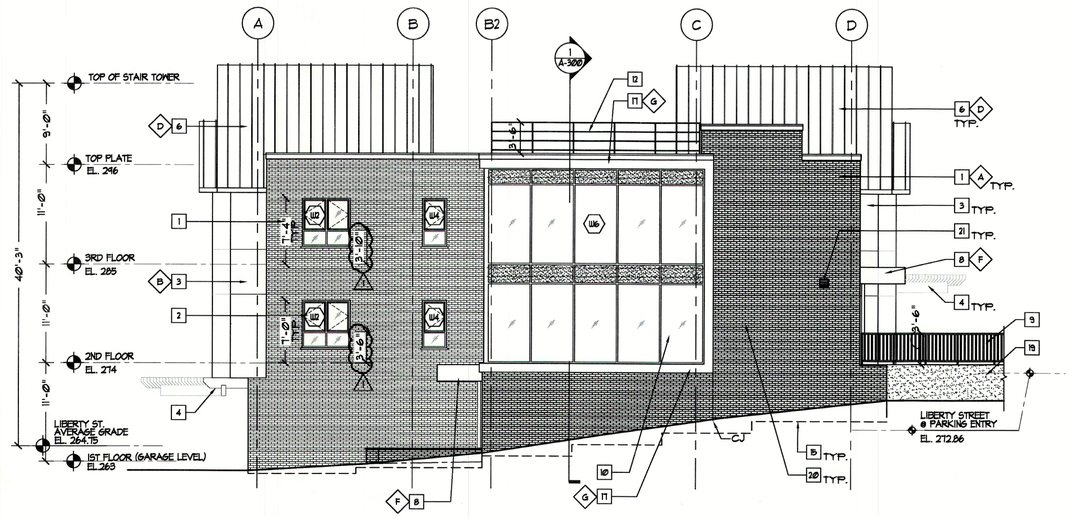

3 SIDE ELEVATION
SCALE: 1/8" = 1'-0"

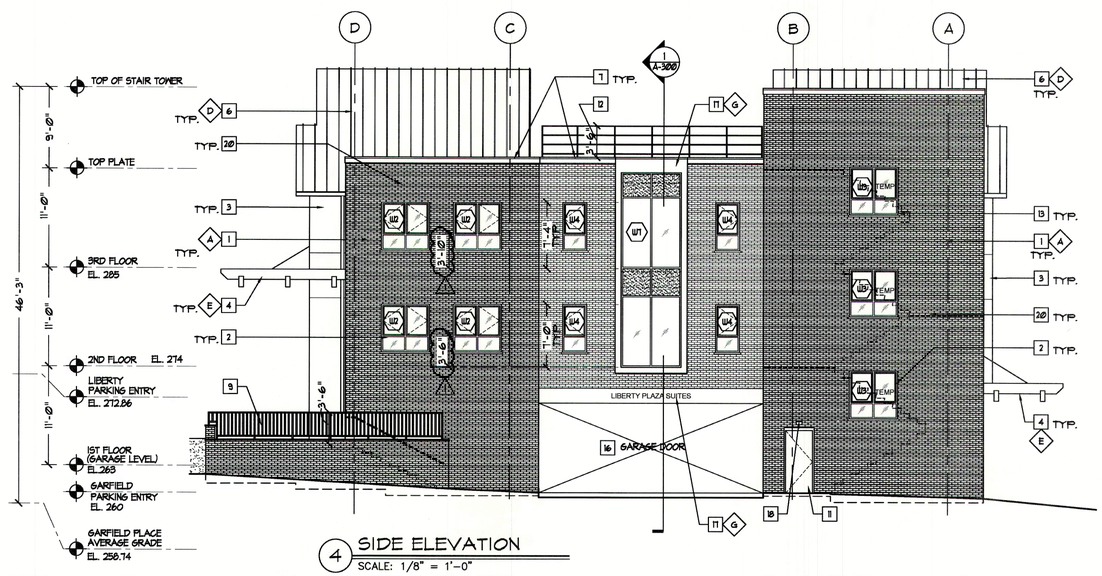

4 SIDE ELEVATION
SCALE: 1/8" = 1'-0"

LEGEND

- INDICATES CHANGE IN COLOR
- CJ BRICK CONTROL JOINT

EXTERIOR FINISH SCHEDULE

- A: 4" BRICK VENNER, COLOR: TBD
- B: METAL PANEL, MFR: ALI3 COLOR: TBD
- C: DECORATIVE ALUMN. TRIM. COLOR: TBD
- D: STANDING SEAM METAL ROOF, COLOR: TBD
- E: PAINTED STEEL FRAMED PERGOLA, COLOR: TBD
- F: DECORATIVE ALUMN. TRIM, COLOR: TBD
- G: METAL PANEL COVER. MFR: ALI3. COLOR: TBD

KEY NOTES "-"

1. BRICK VENEER, TYP.
2. STOREFRONT WINDOW SYSTEM.
3. METAL PANEL SIDING.
4. PAINTED STEEL FRAMED PERGOLA.
5. DECORATIVE ALUM. TRIM.
6. STANDING SEAM METAL ROOF.
7. ROOF RIDGE EDGE. REFER TO DETAIL ON A-850. COLOR: TBD
8. FLAT ROOF STEEL FRAMED, ALUMN TRIM COVERED CANOPY.
9. 33"-36" ABOVE NOSING HANDRAIL AND/OR 42" AFF GUARDRAIL. COORDINATE W/ PLAN AND STURCT. DWGS. PAINT. COLOR:TBD
10. CURTAIN WALL WINDOW SYSTEM.
11. HOLLOW METAL DOOR & FRAME.
12. ROOF GUARDRAIL. REFER TO ROOF PLAN.
13. BRICK ROWLOCK SILL.
14. ALUMN. GUTTER & LEADER. COLOR: TBD
15. LINE OF BRICK SHELF. COORDINATE W/ STRUCT. DWGS. CRICKET, SEE ROOF PLAN
16. INSULATED GARAGE DOOR.
17. DECORATVIE METAL PANEL COVER.
18. BUILDING EXTERIOR LIGHT, REFER TO RCP.
19. FINISHED CONC. PARGE OVER REINFORCED CONC. RETAINING WALL, REFER TO CIVIL DWGS AND STRUCT. DWGS.
20. COORDINATE W/ STRUCT. DWGS. FOR BRICK RELIEVING ANGLE LOCATION, SPACING, SUPPORT, DETAILS, ETC. TYP. AT ALL BRICK VENEER.
21. LOUVER, COORDINATE W/ ENGINEER'S DWGS. PROVIDE REQUIRED LINTEL, FLASHING, ETC. COLOR: TBD (MATCH BRICK)

LIBERTY PLAZA SUITES

500 COMMERCE STREET
HAWTHORNE, NY 10532

ARCHITECT

dimovskiarchitecture PLLC
59 Kensico Road, Thornwood, NY 10594
(914) 747-3500 | (914) 747-3588 fax
www.dimovskiarchitecture.com

STRUCTURAL ENGINEER

CHARLES A. MANGANARO
CONSULTING ENGINEERS
A PROFESSIONAL CORPORATION
303 SOUTH BROADWAY, SUITE 223, TARRYTOWN, NY 10591-5488
SHAILESH R. NAIK, P.E.
NEW YORK LICENSE No. 072797-1

MEP ENGINEER

CLA Consulting Engineers
50 Broadway, Hawthorne, NY 10532
914.747.2800
6 West 38th Street, Suite 501 New York, NY 10018
646.846.4110
clace.com

NO.	REVISION/ISSUE	DATE
3	ISSUE FOR DOB COMMENT 1	04/26/2021
2	ISSUE FOR PRICING	03/16/2021
1	ISSUE FOR PERMIT	03/12/2021

SEAL

REGISTERED ARCHITECT PAULETTE DIMOVSKI 032389 STATE OF NEW YORK

PROJECT

LIBERTY PLAZA SUITES
500 COMMERCE ST.
TOWN OF MT. PLEASANT, NY

DATE:	AUGUST 12, 2020
PROJECT NO:	DA 2034
DRAWN BY:	YK
CHECKED BY:	PD/SGD
SCALE:	AS NOTED

DRAWING TITLE

EXTERIOR ELEVATIONS

SHEET NO.

A-200

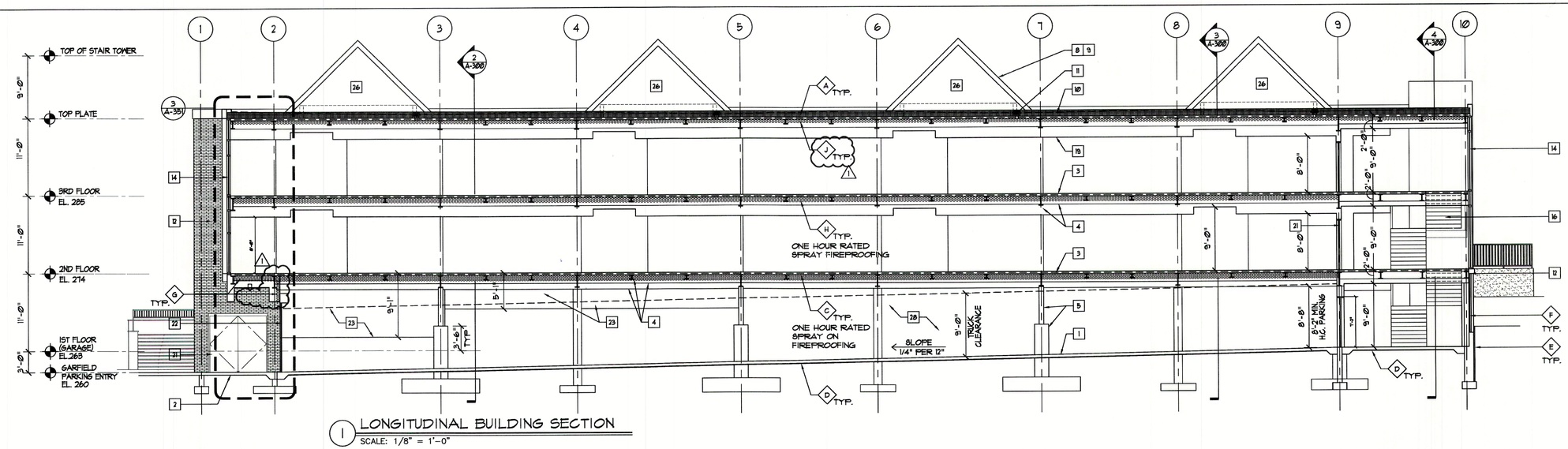

1 LONGITUDINAL BUILDING SECTION
SCALE: 1/8" = 1'-0"

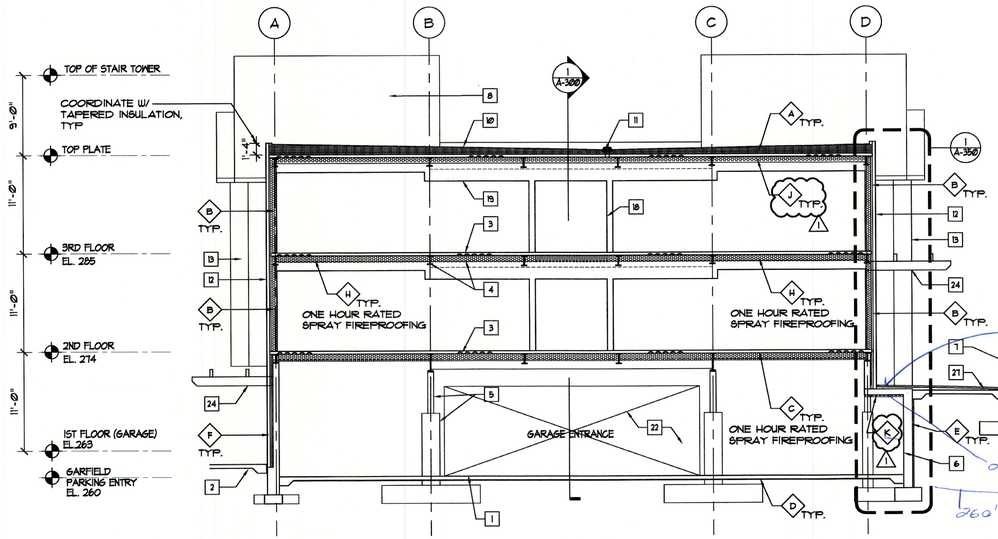

2 BUILDING SECTION
SCALE: 1/8" = 1'-0"

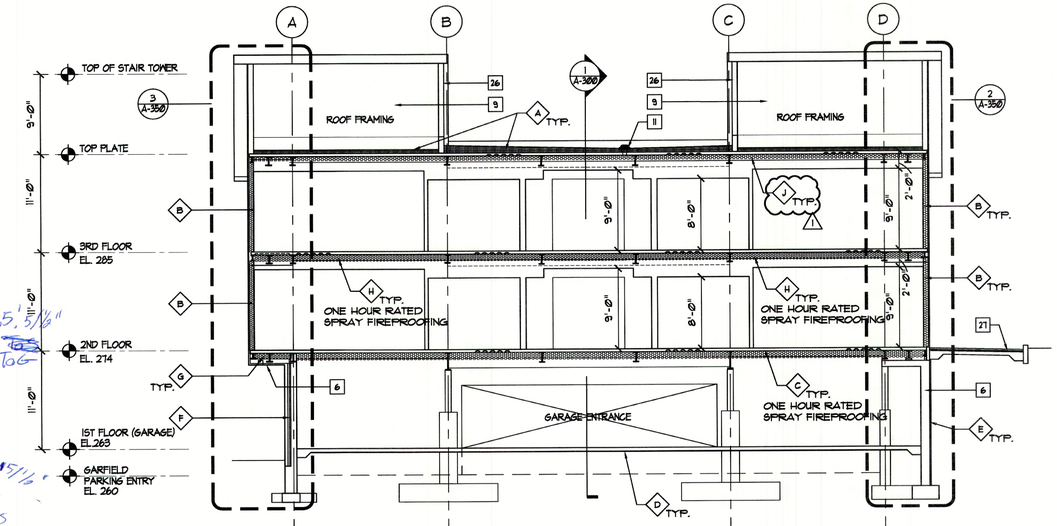

3 BUILDING SECTION
SCALE: 1/8" = 1'-0"

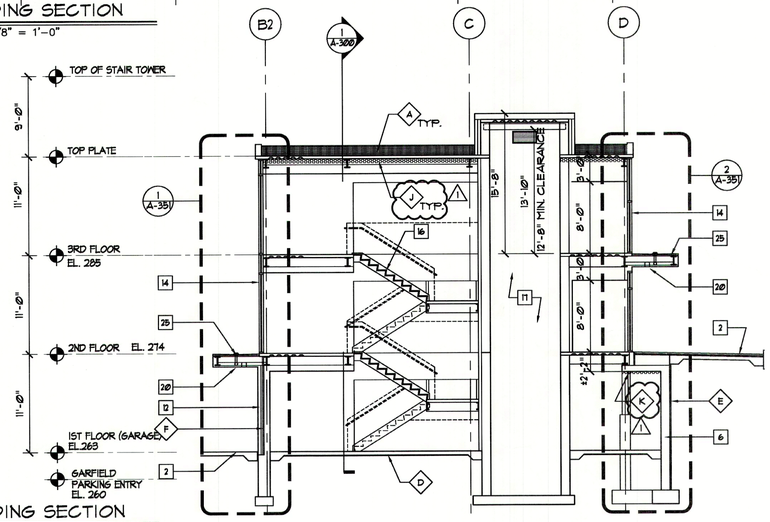

4 BUILDING SECTION
SCALE: 1/8" = 1'-0"

GENERAL NOTES

A. SEE STRUCTURAL DWGS FOR FOOTINGS, BOND BEAMS, REINFORCING, STRUCT. MEMBER TYPES, GUAGES, SIZES, CONNECTIONS, ETC, TYP.
B. PROVIDE A CONT. SEALANT BEAD AT ALL EXPOSED JOINTS BETWEEN DISSIMILAR MATERIALS SUCH AS WOOD, MASONRY, GYP. BD., METAL, ETC. SEALANT COLOR TO MATCH ADJACENT SURFACE.
C. PAINT ALL EXPOSED STEEL.

INSULATION SCHEDULE

- A — R-30 ROOF INSULATION
- B — SPRAY FOAM INSULATION, R-20
- C — SPRAY FOAM INSULATION (R-49) W/ ONE HOUR RATED SPRAY FIREPROOFING
- D — 2" RIGID INSULATION, R-10
- E — 1.5" RIGID INSULATION, R-7.5
- F — 2" RIGID INSULATION, R-10
- G — SPRAY FOAM INSULATION (R-49)
- H — SPRAY FOAM INSULATION (R-39) W/ ONE HOUR RATED SPRAY FIREPROOFING
- J — SPRAY FOAM INSULATION, R-19
- K — SPRAY FOAM INSULATION, R-10

KEY NOTES "-"

1. CONCRETE SLAB ON GRADE W/ 1/2" EXP. JOINT AT PERIMETER, SEE STRUCT. DWGS, TYP.
2. CONC. SIDEWALK W/ 1/2" EXP. JOINT AT BUILDING PERIMETER. COORDINATE W/ CIVIL DRAWINGS.
3. CONC. SLAB OVER METAL DECK, SEE STRUCT. DWGS.
4. STEEL BEAMS AND COLUMNS, SEE STRUCT. DWGS.
5. STEEL COLUMN & CONC. BASE, PAINT, REFER TO STRUCT. DWGS. TYP.
6. REINFORCED CONC. FOUNDATION WALL AND FOOTING, SEE STRUCT. DWGS. TYP.
7. REINFORCED RETAINING WALL, COORDINATE W/ CONSTRUCTION PLAN, CIVIL DWGS AND STRUCT. DWGS.
8. STANDING SEAM METAL ROOF.
9. ROOF FRAMING PER STRUCT. DWGS.
10. FLAT ROOF, EPDM ROOFING, SEE ROOF DETAIL.
11. ROOF DRAIN INTERNALLY PIPED. COORDINATE W/ PLUMB. DWGS.
12. BRICK VENEERED WALL ASSEMBLY, SEE TYP. WALL DETAILS.
13. METAL PANEL WALL ASSEMBLY OVER METAL STUD, SEE TYP. WALL DETAILS.
14. CURTAIN WALL WINDOW.
15. ALUMINUM & GLASS STOREFRONT SYSTEM.
16. STAIR ASSEMBLY, SEE STAIR DETAILS.
17. ELEVATOR SHAFT.
18. GYP. BD. FINISH INTERIOR PARTITION. REFER TO CONSTR. PLAN FOR WALL TYPE, PAINT
19. FINISH CEILING SYSTEM WHERE OCCURS, SUSPENDED FROM STRUCT. ABOVE, SEE RCP, TYP.
20. EXTERIOR SOFFIT DOWN LIGHT, SEE ELEC. DWGS AND RCP.
21. H.M. DOOR & FRAME.
22. INSULATED GARAGE DOOR W/ LOUVER OPENING.
23. MASONRY WALL ABOVE REINFORCED CONC. SLAB, PAINT, SEE STRUCT. DWGS. REFER TO WALL DETAIL ON A-350.
24. PAINTED STEEL FRAME PERGOLA, COORDINATE W/ STRUCT. DWGS.
25. ALUMN. TRIM COVERED STEEL FRAME CANOPY, COORDINATE W/ STRUCT. DWGS.
26. FINISH SIDING, SEE ROOF CONSTRUCTION NOTE #6/A-104.
27. MUD SET STONE PAVERS OVER CONC. SLAB.
28. MAINTAIN 1'-6" MIN ACCESSIBLE ROUTE AT ALL STEEL BEAMS, PIPES, ETC. MAINTAIN 8'-2" MIN. AT HC PARKING.

LIBERTY PLAZA SUITES

500 COMMERCE STREET
HAWTHORNE, NY 10532

ARCHITECT
dimovski architecture PLLC
59 Kensico Road, Thornwood, NY 10594
(914) 747-3500 | (914) 747-3588 fax
www.dimovskiarchitecture.com

STRUCTURAL ENGINEER
CHARLES A. MANGANARO CONSULTING ENGINEERS
A PROFESSIONAL CORPORATION
303 SOUTH BROADWAY, SUITE 223, TARRYTOWN, NY 10591-5488
SHAILESH R. NAIK, P.E.
NEW YORK LICENSE No. 072797-1

MEP ENGINEER
CLA Consulting Engineers
50 Broadway, Hawthorne, NY 10532
914.747.2800
8 West 38th Street, Suite 501, New York, NY 10018
646.848.4110
clcoe.com

NO.	REVISION/ISSUE	DATE
3	ISSUE FOR DOB COMMENT	04/26/2021
2	ISSUE FOR PRICING	03/16/2021
1	ISSUE FOR PERMIT	03/12/2021

SEAL
REGISTERED ARCHITECT — PAULETTE DIMOVSKI — 032301 — STATE OF NEW YORK

PROJECT
LIBERTY PLAZA SUITES
500 COMMERCE ST.
TOWN OF MT. PLEASANT, NY

DATE:	AUGUST 12, 2020
PROJECT NO:	DA 2034
DRAWN BY:	YK
CHECKED BY:	PD/SGD
SCALE:	AS NOTED

DRAWING TITLE
BUILDING SECTIONS

SHEET NO.
A-300

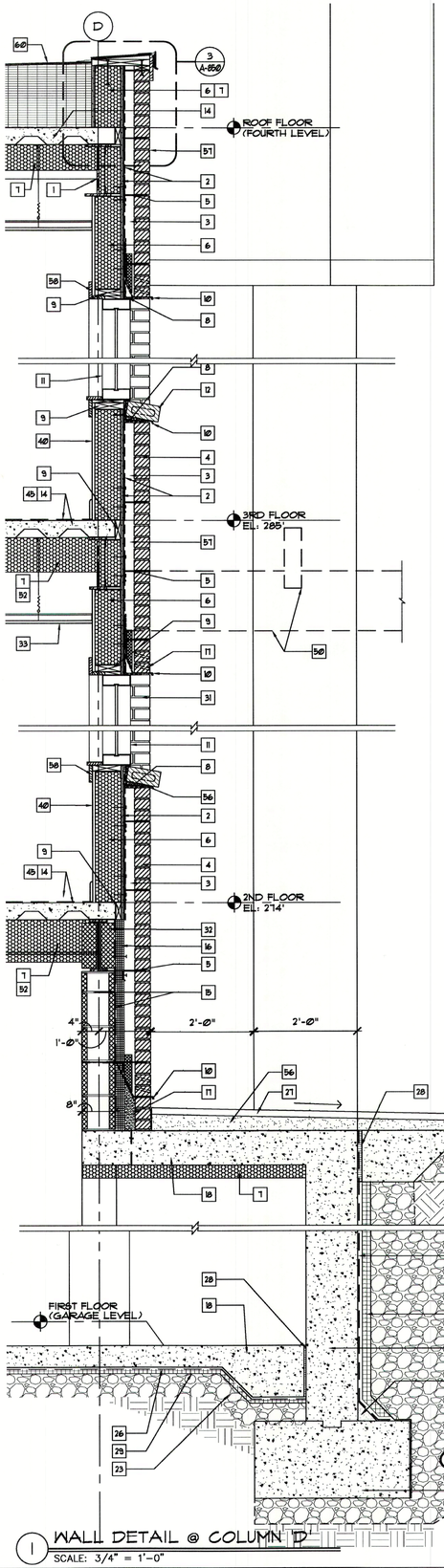

1 WALL DETAIL @ COLUMN 'D'
SCALE: 3/4" = 1'-0"

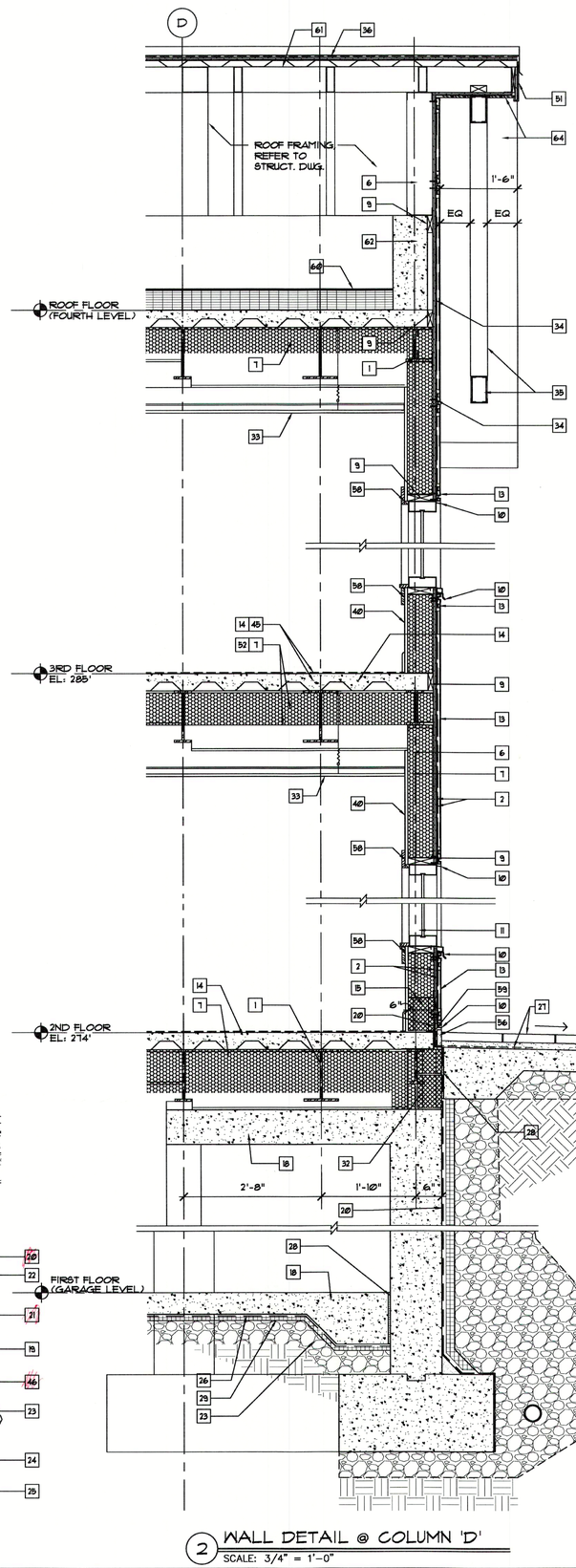

2 WALL DETAIL @ COLUMN 'D'
SCALE: 3/4" = 1'-0"

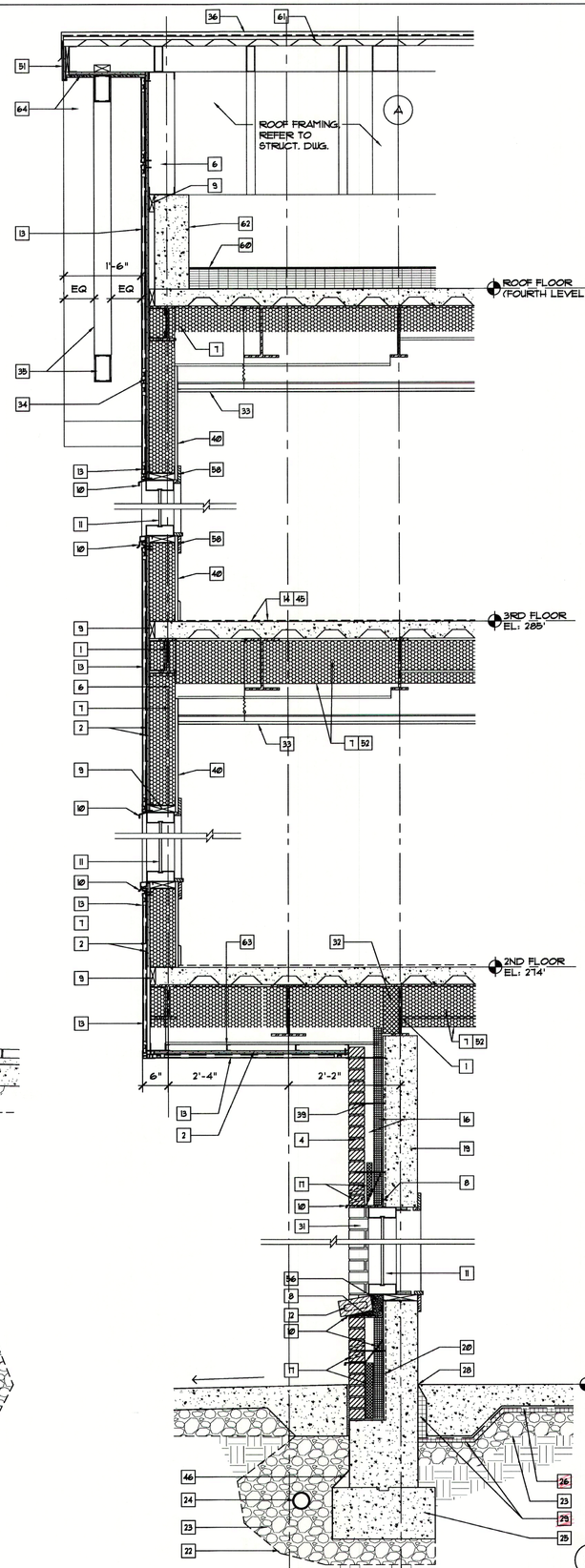

3 WALL DETAIL @ COLUMN 'A'
SCALE: 3/4" = 1'-0"

WALL DETAIL KEYNOTES "[·]"

1. STEEL BEAM PER STRUCT.
2. 3/4" EXTERIOR GRADE PLYWOOD SHEATHING AND TYVEK HOUSE WRAP
3. 2" AIR SPACE
4. 4" BRICK VENEER
5. MASONRY TIES @ 16" O.C. VERTICAL AND 32" O.C. HORIZONTAL. INSTALL AS PER MFR'S SPECIFICATIONS.
6. 6" METAL STUD @ 16" O.C. REFER TO STRUCT. DWG. FOR STUD GAGE.
7. SPRAY FOAM INSULATION. REFER TO INSULATION SCHEDULE ON A-300, BUILDING SECTION.
8. STEEL ANGLE/LINTEL. REFER TO STRUCT. DWG. FOR ANCHORING DETAILS. PAINT EXPOSED STEEL.
9. P.T. 2"x WOOD BLOCKING
10. HEMMED EDGE LEAD COATED COPPER THRU WALL FLASHING
11. INSULATED ALUM. STOREFRONT WINDOW SYSTEM, REFER TO WINDOW SCHEDULE
12. BRICK ROWLOCK SILL
13. 1" METAL PANEL WALL SYSTEM, MFR: AL13. PROVIDE END FRAME, PERIMETER CAP, REVEAL CAP, I BEAM STIFFENER, WINDOW SURROUND CAP, ETC. AS REQUIRED. INSTALL AS PER MFR'S SPECIFICATION. SEE EXTERIOR ELEVATIONS FOR SEAM/COLOR CHANGE LOCATIONS.
14. CONC. SLAB OVER METAL DECK PER STRUCT. DWGS.
15. 6"CMU/8" CMU W/ HORIZONTAL REINF. EVERY OTHER COURSE & CONT. DAMP PROOFING. REFER TO STRUCT. DWGS FOR VERTICAL REINFORCEMENT.
16. 2" RIGID INSULATION AND 2" AIR SPACE
17. MORTAR NET W/ WEEP HOLES
18. REINFORCED CAST IN PLACE CONC. SLAB PER STRUCT.
19. REINFORCED CONC. FOUNDATION WALL PER STRUCT. DWG.
20. CONT. FOUNDATION WALL DAMP PROOFING
21. 1 1/2" RIGID INSULATION
22. GEO-FABRIC WRAP
23. 3/4" CRUSHED GRAVEL
24. FOOTING DRAIN PIPE PER CIVIL DRAWING.
25. REINF. CONC. FOOTING PER STRUCT. DWGS.
26. 6 MIL WATER PROOF MEMBRANE UNDER SLAB
27. MUD-SET STONE PAVERS ON W.P. MEMBRANE
28. 1/2" CON. BACKER ROD & SEALANT AT EXPANSION JOINT
29. 2" UNDER SLAB RIGID INSULATION, REFER TO BUILDING SECTION FOR INSULATION SCHEDULE.
30. METAL CLIP ANGLES FASTENED TO STRUCTURAL STEEL/CONC. FLOOR & CURTAIN WALL. INSTALL AS PER CURTAIN WALL MFR'S SPECIFICATION.
31. RETURNED BRICK
32. FACK BLOCK CMU
33. SCHEDULED CEILING, SEE RCP.
34. AL13 METAL PANEL REVEAL @ COLOR CHANGE, INSTALL AS PER MFR'S SPECIFICATION, SEE EXTERIOR ELEVATIONS FOR LOCATIONS.
35. METAL STUD BEAM BOX COVERED W/ DECORATIVE ALUMN. TRIM FASTENED TO GABLE ROOF ASSEMBLY.
36. STANDING SEAM METAL ROOF ASSEMBLY.
37. SUSPENDED EXTERIOR SOFFIT SYSTEM.
38. METAL PANEL SOFFIT SYSTEM BY AL13. PROVIDE END CAP, JOINT CAP, ETC AS REQUIRED. INSTALL AS PER MFR'S SPECIFICATION.
39. DOVETAIL ANCHOR @ 16" O.C. VERTICAL, 32" O.C. HORIZONTAL @ POURED CONC. WALL. INSTALL AS PER MFR'S SPECIFICATION.
40. 5/8" GYP. BOARD
41. REFER TO STRUCT. DWGS. FOR FLOOR CONSTRUCTION.
42. INSULATED GLASS CURTAIN WALL WINDOW/DOOR SYSTEM. REFER TO WINDOW SCHEDULE
43. MUDSET STONE THRESHOLD
44. METAL SADDLE OVER NON SHRINK GROUT
45. FINISH FLOOR PER FINISH SCHEDULE
46. CONTINUOUS MORTAR CANT
47. EPDM ROOFING MEMBRANE OVER ROSIN PAPER/FELT UNDERLAYMENT.
48. 3/4" EXTERIOR GRADE PLYWOOD OVER P.T. WOOD SLEEPER, SLOPE TO DRAIN OVER 1 1/2" METAL DECKING
49. FINISHED FASCIA BOARD OVER 3/4" EXTERIOR GRADE PLYWOOD/VAPOR BARRIER.
50. STEEL FRAMED PERGOLA. PAINT. REFER TO FINISH SCHEDULE. REFER TO STRUCT. DWGS.
51. FINISH ALUMN. TRIM OVER FASCIA BOARD OVER VAPOR BARRIER OVER 3/4" CDX PLYWOOD.
52. APPLY ONE HOUR SPRAY PAINT OVER INSULATION. COORDINATE W/ BUILDING SECTION A-300.
53. 3'-6" HIGH 1-1/2" DIA. STEEL GUARDRAIL, PAINT. POST SPACING TO BE 4'-0" (MAX). PROVIDE INTERMEDIATE BALLUSTERS, REFER TO ROOF PLAN FOR GUARDRAIL NOTE. SEE ELEVATION.
54. STEEL ANGLE/POST TO SUPPORT BRICK VENEER, REFER TO STRUCT. DWGS. FOR DETAILS
55. GARAGE ROLL UP DOOR, PROVIDE METAL CLIP. INSTALL AS PER MFR'S SPECIFICATION.
56. NON-SHRINK GROUT
57. INSTALL BRICK RELIEVING ANGLE AS SPECIFIED PER STRUCT. DWGS. REFER TO STRUCT. DWGS FOR LOCATIONS AND DETAILS
58. SOLID WOOD WINDOW TRIM, COLOR: TBD
59. CONC. PARGE.
60. EPDM ROOFING W/ R-30 INSULATION. REFER TO ROOF PLAN AND ROOF DETAILS.
61. 1 1/2" METAL DECKING
62. CONC. CURB, REFER TO STRUCT. DWGS.
63. METAL CHANNEL @ 16" O.C. SEE STRUCT. DWGS.
64. FINISHED SOFFIT

LIBERTY PLAZA SUITES

500 COMMERCE STREET
HAWTHORNE, NY 10532

ARCHITECT
dimovski architecture P.C.
59 Kensico Road, Thornwood, NY 10594
(914) 747-3500 | (914) 747-3588 fax
www.dimovskiarchitecture.com

STRUCTURAL ENGINEER
CHARLES A. MANGANARO
CONSULTING ENGINEERS
A PROFESSIONAL CORPORATION
303 SOUTH BROADWAY, SUITE 223, TARRYTOWN, NY 10591-5488
SHAILESH R. NAIK, P.E.
NEW YORK LICENSE No. 072797-1

MEP ENGINEER
OLA Consulting Engineers
50 Broadway
Hawthorne, NY 10532
914.747.2800
&
5 West 30th Street,
Suite 501
New York, NY 10018
646.946.4110
ola-ce.com

NO.	REVISION/ISSUE	DATE
3	ISSUE FOR DOB COMMENT /1	04/26/2021
2	ISSUE FOR PRICING	03/16/2021
1	ISSUE FOR PERMIT	03/12/2021

SEAL
REGISTERED ARCHITECT PAULETTE DIMOVSKI 032161 STATE OF NEW YORK

PROJECT
LIBERTY PLAZA SUITES
500 COMMERCE ST.
TOWN OF MT. PLEASANT, NY

DATE:	AUGUST 12, 2020
PROJECT NO:	DA 2034
DRAWN BY:	YK
CHECKED BY:	PD/SGD
SCALE:	AS NOTED

DRAWING TITLE
WALL DETAILS

SHEET NO.
A-350

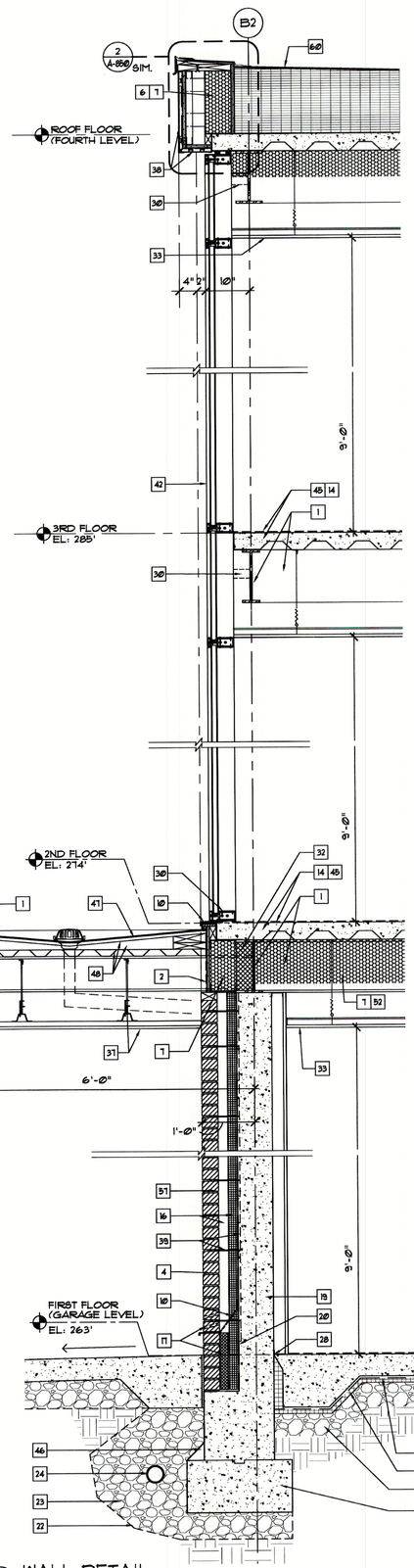

1 WALL DETAIL
SCALE: 3/4" = 1'-0"

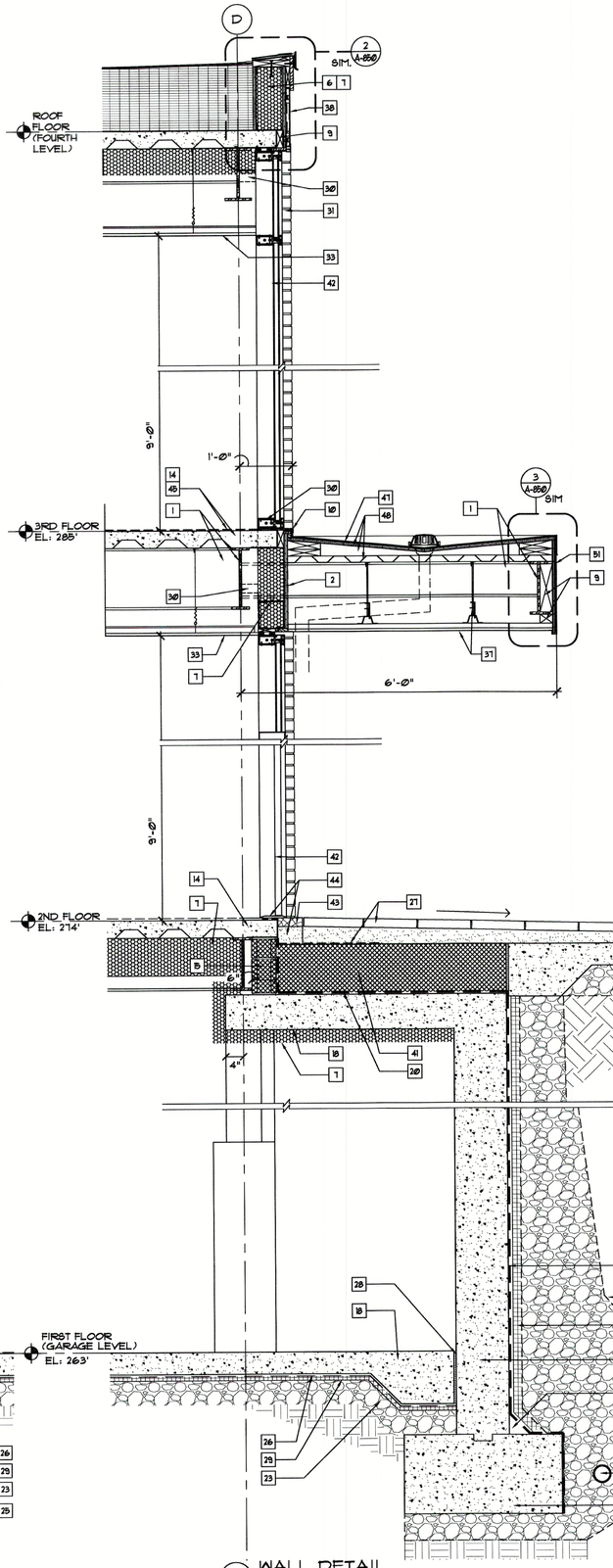

2 WALL DETAIL
SCALE: 3/4" = 1'-0"

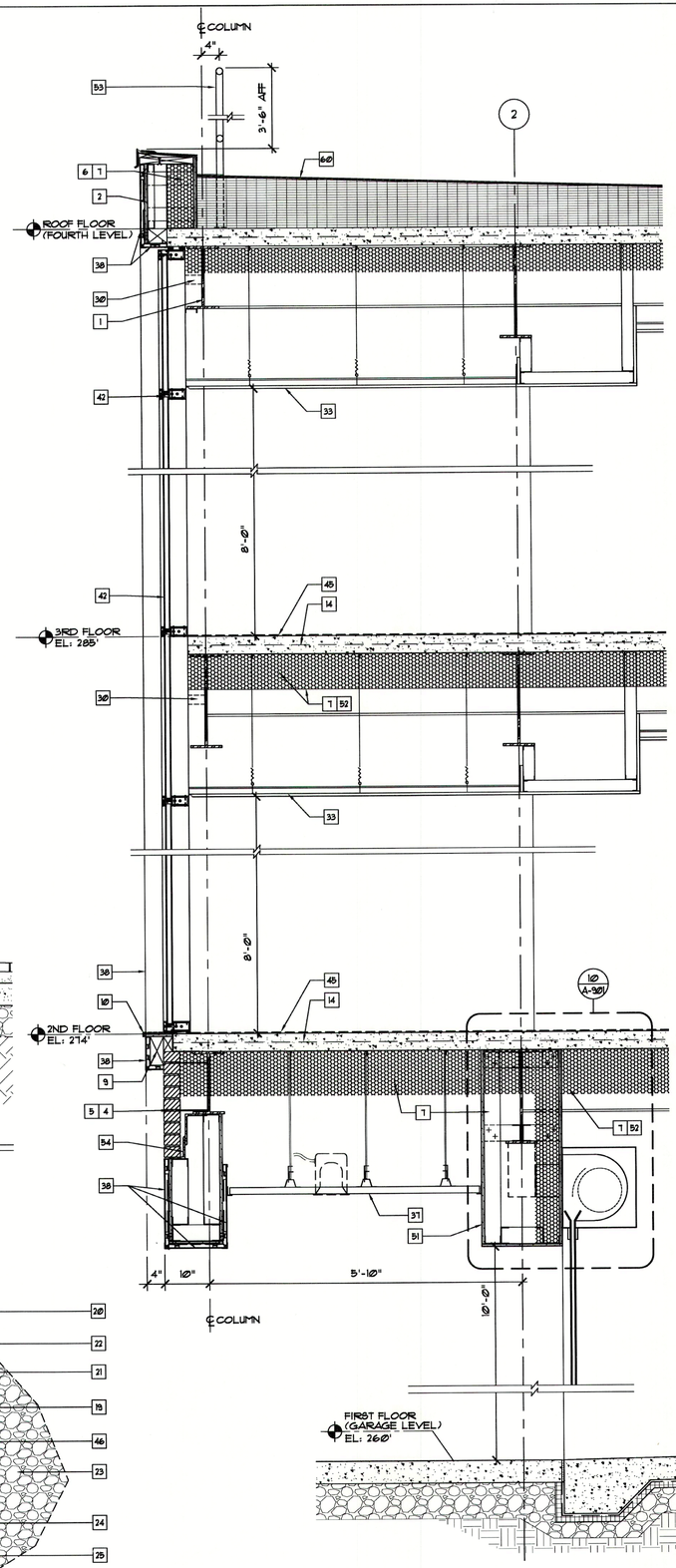

3 WALL DETAIL
SCALE: 3/4" = 1'-0"

WALL DETAIL KEYNOTES "[-]"

1. STEEL BEAM PER STRUCT.
2. 3/4" EXTERIOR GRADE PLYWOOD SHEATHING AND TYVEK HOUSE WRAP
3. 2" AIR SPACE
4. 4" BRICK VENEER
5. MASONRY TIES @ 16" O.C. VERTICAL AND 32" O.C. HORIZONTAL. INSTALL AS PER MFR'S SPECIFICATIONS.
6. 6" METAL STUD @ 16" O.C. REFER TO STRUCT. DWG. FOR STUD GAGE.
7. SPRAY FOAM INSULATION, REFER TO INSULATION SCHEDULE ON A-300, BUILDING SECTION.
8. STEEL ANGLE/LINTEL. REFER TO STRUCT. DWG. FOR ANCHORING DETAILS. PAINT EXPOSED STEEL.
9. P.T. 2"x WOOD BLOCKING
10. HEMMED EDGE LEAD COATED COPPER THRU WALL FLASHING
11. INSULATED ALUM. STOREFRONT WINDOW SYSTEM, REFER TO WINDOW SCHEDULE
12. BRICK ROWLOCK SILL
13. 1" METAL PANEL WALL SYSTEM, MFR: AL13. PROVIDE END FRAME, PERIMETER CAP, REVEAL CAP, I BEAM STIFFENER, WINDOW SURROUND CAP, ETC. AS REQUIRED. INSTALL AS PER MFR'S SPECIFICATION. SEE EXTERIOR ELEVATIONS FOR SEAM/COLOR CHANGE LOCATIONS.
14. CONC. SLAB OVER METAL DECK PER STRUCT. DWGS.
15. 6"CMU/8" CMU W/ HORIZONTAL REINF. EVERY OTHER COURSE & CONT. DAMP PROOFING. REFER TO STRUCT. DWGS FOR VERTICAL REINFORCEMENT.
16. 2" RIGID INSULATION AND 2" AIR SPACE
17. MORTAR NET W/ WEEP HOLES
18. REINFORCED CAST IN PLACE CONC. SLAB PER STRUCT.
19. REINFORCED CONC. FOUNDATION WALL PER STRUCT. DWG.
20. CONT. FOUNDATION WALL DAMP PROOFING
21. 1 1/2" RIGID INSULATION
22. GEO-FABRIC WRAP
23. 3/4" CRUSHED GRAVEL
24. FOOTING DRAIN PIPE PER CIVIL DRAWING.
25. REINF. CONC. FOOTING PER STRUCT. DWGS.
26. 6 MIL WATER PROOF MEMBRANE UNDER SLAB
27. MUD-SET STONE PAVERS ON W.P. MEMBRANE
28. 1/2" CON. BACKER ROD & SEALANT AT EXPANSION JOINT
29. 2" UNDER SLAB RIGID INSULATION, REFER TO BUILDING SECTION FOR INSULATION SCHEDULE.
30. METAL CLIP ANGLES FASTENED TO STRUCTURAL STEEL/CONC. FLOOR & CURTAIN WALL. INSTALL AS PER CURTAIN WALL MFR'S SPECIFICATION.
31. RETURNED BRICK
32. BACK BLOCK CMU
33. SCHEDULED CEILING, SEE RCP.
34. AL13 METAL PANEL REVEAL @ COLOR CHANGE, INSTALL AS PER MFR'S SPECIFICATION, SEE EXTERIOR ELEVATIONS FOR LOCATIONS.
35. METAL STUD BEAM BOX COVERED W/ DECORATIVE ALUM. TRIM FASTENED TO GABLE ROOF ASSEMBLY.
36. STANDING SEAM METAL ROOF ASSEMBLY.
37. SUSPENDED EXTERIOR SOFFIT SYSTEM,
38. METAL PANEL SOFFIT SYSTEM BY AL13. PROVIDE END CAP, JOINT CAP, ETC AS REQUIRED. INSTALL AS PER MFR'S SPECIFICATION.
39. DOVETAIL ANCHOR @ 16" O.C. VERTICAL, 32" O.C. HORIZONTAL @ POURED CONC. WALL. INSTALL AS PER MFR'S SPECIFICATION.
40. 5/8" GYP. BOARD
41. REFER TO STRUCT. DWGS. FOR FLOOR CONSTRUCTION.
42. INSULATED GLASS CURTAIN WALL WINDOW/DOOR SYSTEM. REFER TO WINDOW SCHEDULE
43. MUDSET STONE THRESHOLD
44. METAL SADDLE OVER NON SHRINK GROUT
45. FINISH FLOOR PER FINISH SCHEDULE
46. CONTINUOUS MORTAR CANT
47. EPDM ROOFING MEMBRANE OVER ROSIN PAPER/FELT UNDERLAYMENT.
48. 3/4" EXTERIOR GRADE PLYWOOD OVER P.T. WOOD SLEEPER. SLOPE TO DRAIN OVER 1 1/2" METAL DECKING
49. FINISHED FASCIA BOARD OVER 3/4" EXTERIOR GRADE PLYWOOD/VAPOR BARRIER.
50. STEEL FRAMED PERGOLA. PAINT. REFER TO FINISH SCHEDULE. REFER TO STRUCT. DWGS.
51. FINISH ALUMN. TRIM OVER FASCIA BOARD OVER VAPOR BARRIER OVER 3/4" CDX PLYWOOD.
52. APPLY ONE HOUR SPRAY PAINT OVER INSULATION. COORDINATE W/ BUILDING SECTION A-300.
53. 3'-6" HIGH 1-1/2" DIA. STEEL GUARDRAIL, PAINT. POST SPACING TO BE 4'-0" (MAX). PROVIDE INTERMEDIATE BALLUSTERS, REFER TO ROOF PLAN FOR GUARDRAIL NOTE. SEE ELEVATION.
54. STEEL ANGLE/POST TO SUPPORT BRICK VENEER, REFER TO STRUCT. DWGS. FOR DETAILS
55. GARAGE ROLL UP DOOR, PROVIDE METAL CLIP. INSTALL AS PER MFR'S SPECIFICATION.
56. NON-SHRINK GROUT
57. INSTALL BRICK RELIEVING ANGLE AS SPECIFIED PER STRUCT. DWGS. REFER TO STRUCT. DWGS FOR LOCATIONS AND DETAILS
58. SOLID WOOD WINDOW TRIM, COLOR: TBD
59. CONC. PARGE.
60. EPDM ROOFING W/ R-30 INSULATION. REFER TO ROOF PLAN AND ROOF DETAILS.
61. 1 1/2" METAL DECKING
62. CONC. CURB. REFER TO STRUCT. DWGS.
63. METAL CHANNEL @ 16" O.C. SEE STRUCT. DWGS.
64. FINISHED SOFFIT

LIBERTY PLAZA SUITES

500 COMMERCE STREET
HAWTHORNE, NY 10532

ARCHITECT

dimovski architecture
59 Kensico Road, Thornwood, NY 10594
(914) 747-3500 | (914) 747-3588 fax
www.dimovskiarchitecture.com

STRUCTURAL ENGINEER

CHARLES A. MANGANARO
CONSULTING ENGINEERS
A PROFESSIONAL CORPORATION
303 SOUTH BROADWAY, SUITE 223, TARRYTOWN, NY 10591-5488
SHAILESH R. NAIK, P.E.
NEW YORK LICENSE No. 072797-1

MEP ENGINEER

CLA Consulting Engineers
50 Broadway
Hawthorne, NY 10532
914.747.2800
6 West 30th Street,
Suite 501
New York, NY 10018
646.845.4110
clace.com

NO.	REVISION/ISSUE	DATE
3	ISSUE FOR DOB COMMENT /1	04/26/2021
2	ISSUE FOR PRICING	03/16/2021
1	ISSUE FOR PERMIT	03/12/2021

SEAL

REGISTERED ARCHITECT
JULIETTE DIMOVSKI
032761
STATE OF NEW YORK

PROJECT

LIBERTY PLAZA SUITES
500 COMMERCE ST.
TOWN OF MT. PLEASANT, NY

DATE:	AUGUST 12, 2020
PROJECT NO:	DA 2034
DRAWN BY:	YK
CHECKED BY:	PD/SGD
SCALE:	AS NOTED

DRAWING TITLE

WALL DETAILS

SHEET NO.

A-351

GENERAL NOTES FOR STAIR A AND STAIR B

A. SEE STRUCT. DWGS. FOR ADDITIONAL INFO. TYP.
DO NOT FASTEN STEEL STAIR STRINGERS TO ADJACENT METAL STUD WALLS, STAIRS TO BE INDEPENDANTLY SUPPORTED & FREE FROM GYP. BD. /METAL STUD PARTITIONS.

B. STAIRS AND COMPONENTS TO MEET ALL REQUIREMENTS OF NYS BC CHAPTER 10 INCLUDING (BUT NOT LIMITED TO) SECT. 1011.2 REQUIRED WIDTH, 1011.3 REQUIRED HEADROOM, 1011.5.2 MAX. RISER HEIGHT AND TREAD DEPTH ETC.

KEY NOTES "[-]"

1. MECHANICAL DUAL STRINGER W/ TREAD PAN W/ TERRAZZO TREAD FINISH, STRINGER/PAN TO BE POWDER COATED. MFR: PARAGON STAIRS. CONTACT: DAVID GOODMAN
2. FACTORY FINISHED 3'-6" AFF GUARDRAIL AND 1 1/2" DIA 36" ABOVE NOSING HANDRAIL W/ WIRE BALLUSTERS BY PARAGON STAIRS. COLOR: TBD HANDRAIL TO EXTEND 12" BEYOND TOP AND BOTTOM RISERS, TYP.
3. FINISH CEILING, REFER TO RCP.
4. CONTINUOUS GUARDRAIL, SEE STAIR SECTION.
5. FINISHED WALL, SEE PLAN FOR PARTITION TYPE.
6. 1/2" TEMPERED GLASS DRAFT CURTAIN, 18" HIGH. INSTALL AS PER MFR'S SPECIFICATION. REFER TO ENLARGED STAIR 'A' PLANS AND REFLECTED CEILING PLANS FOR LOCATIONS.

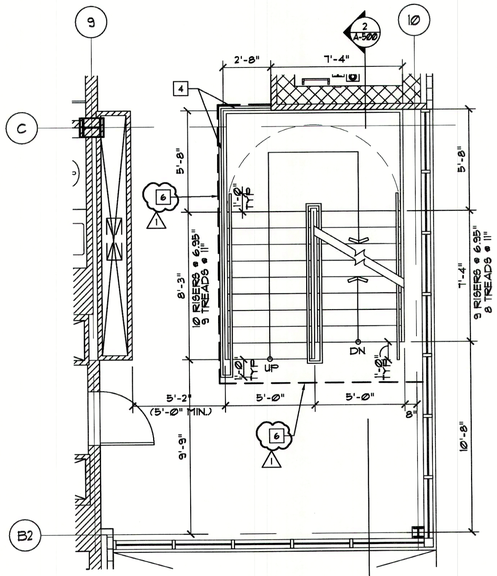

2ND FLOOR PLAN

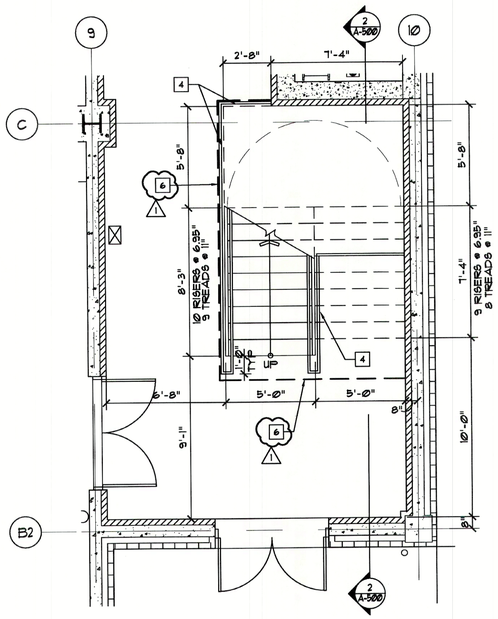

1ST FLOOR PLAN
(GARAGE LEVEL)

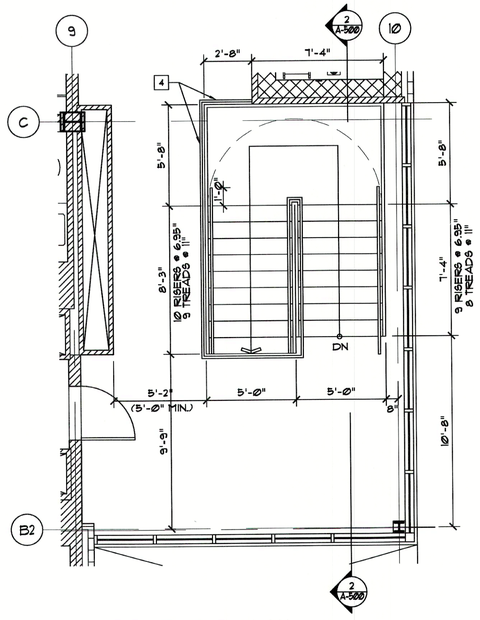

3RD FLOOR PLAN

1 ENLARGED PLANS AT STAIR 'A'
1/4"=1'-0"

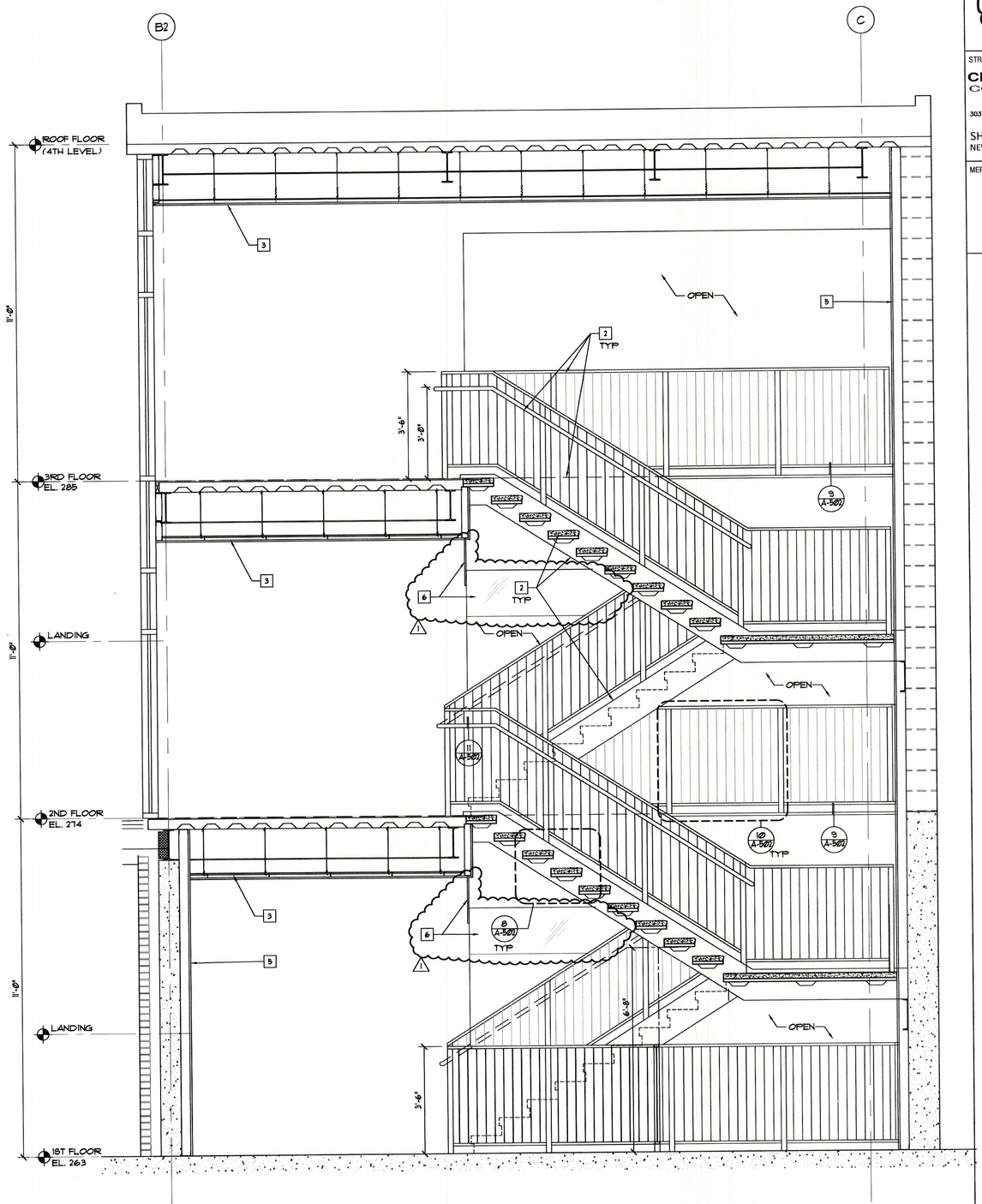

2 STAIR 'A' SECTION
1/2"=1'-0"

LIBERTY PLAZA SUITES
500 COMMERCE STREET
HAWTHORNE, NY 10532

ARCHITECT
dimovski architecture p.c.
59 Kensico Road, Thornwood, NY 10594
(914) 747-3500 | (914) 747-3588 fax
www.dimovskiarchitecture.com

STRUCTURAL ENGINEER
CHARLES A. MANGANARO CONSULTING ENGINEERS
A PROFESSIONAL CORPORATION
303 SOUTH BROADWAY, SUITE 223, TARRYTOWN, NY 10591-5488
SHAILESH R. NAIK, P.E.
NEW YORK LICENSE No. 072797-1

MEP ENGINEER
OLA Consulting Engineers
50 Broadway, Hawthorne, NY 10532 914.747.2800
5 West 30th Street, Suite 501 New York, NY 10018 646.848.4110
olace.com

NO.	REVISION/ISSUE	DATE
3	ISSUE FOR DOB COMMENT	04/26/2021
2	ISSUE FOR PRICING	03/16/2021
1	ISSUE FOR PERMIT	03/12/2021

SEAL
REGISTERED ARCHITECT PAULETTE DIMOVSKI 032160 STATE OF NEW YORK

PROJECT
LIBERTY PLAZA SUITES
500 COMMERCE ST.
TOWN OF MT. PLEASANT, NY

DATE:	AUGUST 12, 2020
PROJECT NO:	DA 2034
DRAWN BY:	YK
CHECKED BY:	PD/SGD
SCALE:	AS NOTED

DRAWING TITLE
STAIR 'A' PLANS AND SECTION

SHEET NO.
A-500

GENERAL NOTE

1. SEE STAIR NOTE ON A-500

KEY NOTES "⊡"

1. PAINTED 1 1/2" DIA. STEEL HANDRAIL & GUARDRAIL
2. PAINTED METAL STRINGER. SEE STRUCT. DWG.
3. CONCRETE SLAB ON METAL DECK PER STRUCT. DWGS. FINISH PER FINISH SCHEDULE
4. PAINTED CMU BLOCK.
5. SURFACE MOUNTED LIGHT FIXTURE, REFER TO RCP.
6. H.M. DOOR AND FRAME, REFER TO DOOR SCHEDULE.
7. PAINTED STEEL BEAM/CHANNEL, REFER TO STRUCT. DWG.
8. FINISHED CEILING, REFER TO RCP.
9. ALUM. STORE FRONT WINDOW SYSTEM, REFER TO WINDOW SCHEDULE.
10. 5/8" TYPE X GYP. BD. & 3 3/8" METAL STUD @ 16" O.C. ENCLOSURE AT UNDERSIDE OF STAIR AND LANDING, PAINT.
11. UNDERSIDE OF STEEL PAN TREAD, RISERS, METAL CLIPS, ETC. TO BE PAINTED.
12. PAINTED REINFORCED CONCRETE WALL PER STRUCT. DWGS.
13. SCHEDULED BASE
14. 42" HIGH GUARDRAIL, SEE DETAIL ON A-502.
15. STEEL LINTEL, PAINT. REFER TO STRUCT. DWGS.
16. PRECAST CONC. LINTEL, REFER TO STRUCT. DWGS.

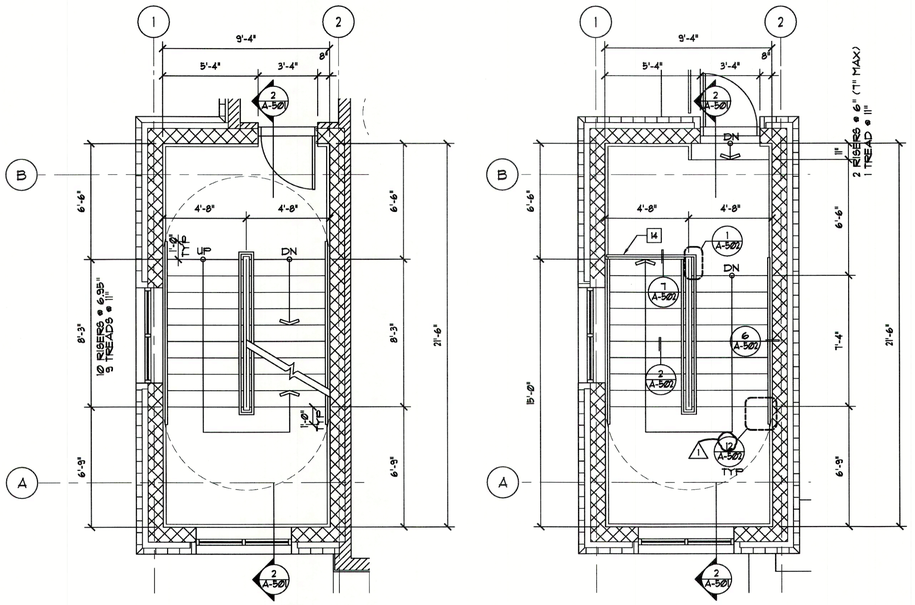

2ND FLOOR PLAN

ROOF PLAN (4TH LEVEL)

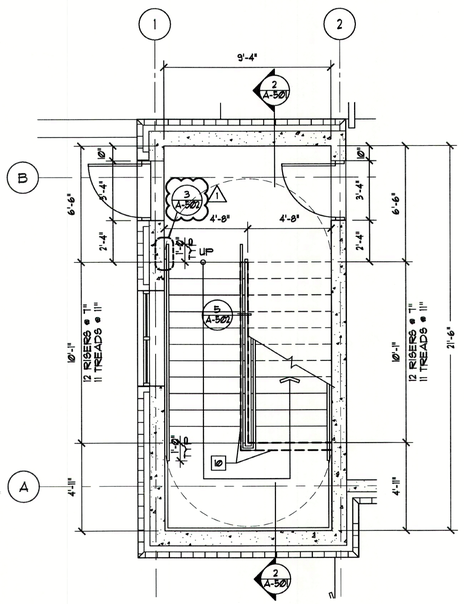

1ST FLOOR PLAN
(GARAGE LEVEL)

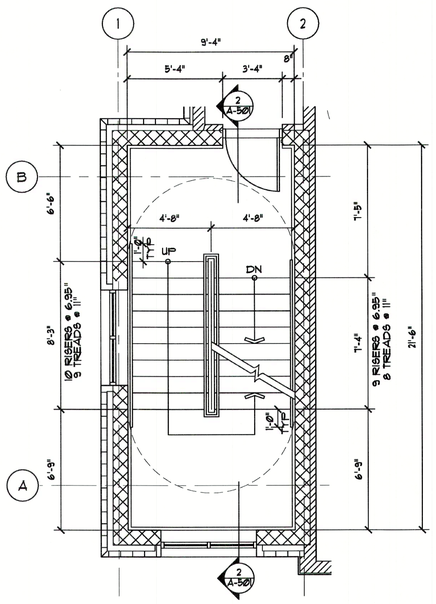

3RD FLOOR PLAN

1 ENLARGED PLANS AT STAIR 'B'

1/4"=1'-0"

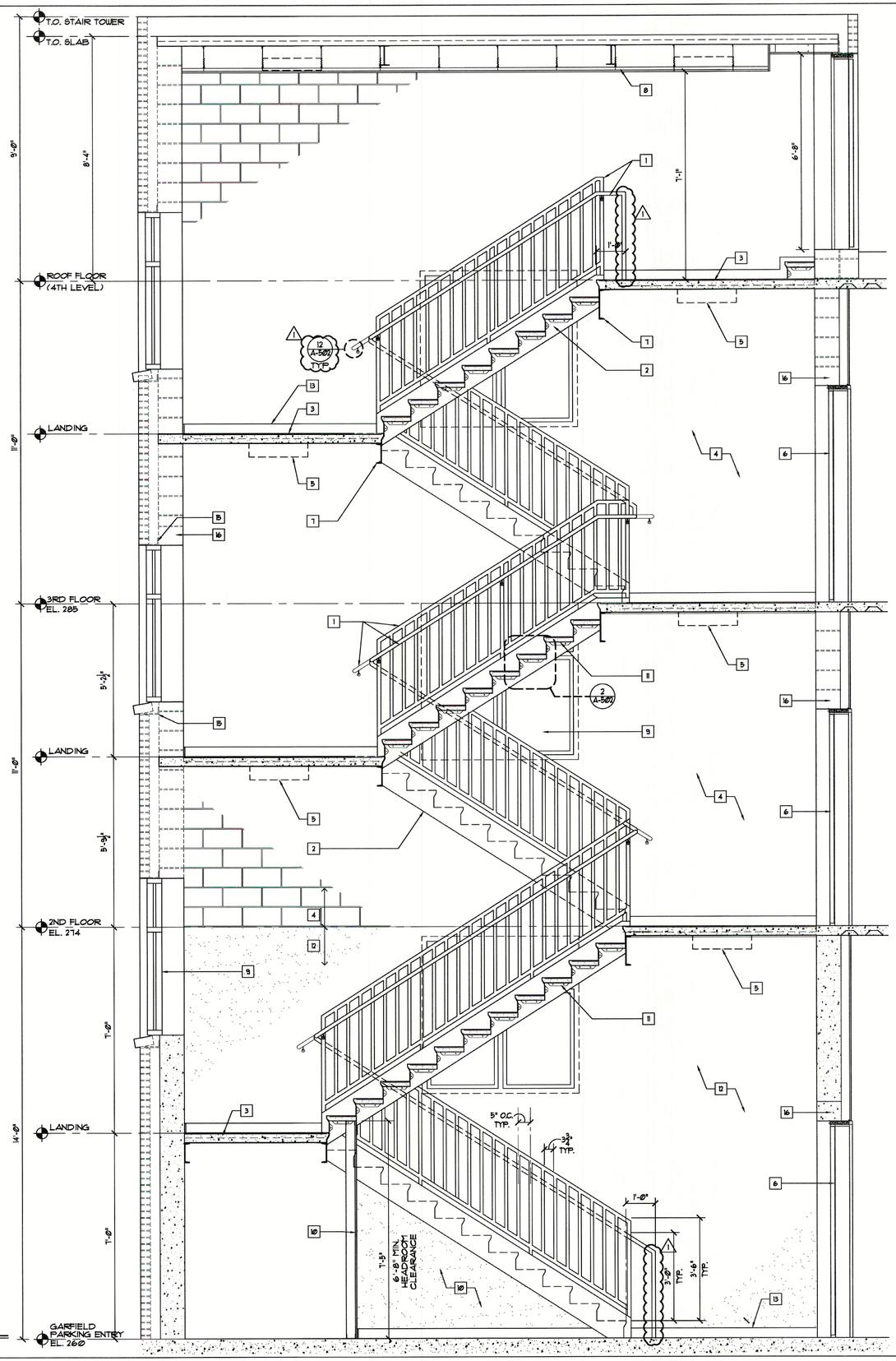

2 STAIR 'B' SECTION

1/2"=1'-0"

LIBERTY PLAZA SUITES

500 COMMERCE STREET
HAWTHORNE, NY 10532

ARCHITECT

dimovski architecture P.L.L.C.
59 Kensico Road, Thornwood, NY 10594
(914) 747-3500 | (914) 747-3588 fax
www.dimovskiarchitecture.com

STRUCTURAL ENGINEER

CHARLES A. MANGANARO
CONSULTING ENGINEERS
A PROFESSIONAL CORPORATION
303 SOUTH BROADWAY, SUITE 223, TARRYTOWN, NY 10591-5488

SHAILESH R. NAIK, P.E.
NEW YORK LICENSE No. 072797-1

MEP ENGINEER

OLA Consulting Engineers
50 Broadway,
Hawthorne, NY 10532
914.747.3500
6 West 30th Street,
Suite 501
New York, NY 10018
646.846.4110
ola-ce.com

NO.	REVISION/ISSUE	DATE
3	ISSUE FOR DOB COMMENT 1	04/26/2021
2	ISSUE FOR PRICING	03/16/2021
1	ISSUE FOR PERMIT	03/12/2021

SEAL

REGISTERED ARCHITECT
JULIETTE DIMOVSKI
032361
STATE OF NEW YORK

PROJECT

LIBERTY PLAZA SUITES
500 COMMERCE ST.
TOWN OF MT. PLEASANT, NY

DATE:	AUGUST 12, 2020
PROJECT NO:	DA 2034
DRAWN BY:	YK
CHECKED BY:	PD/SGD
SCALE:	AS NOTED

DRAWING TITLE

STAIR 'B' PLANS AND SECTION

SHEET NO.

A-501

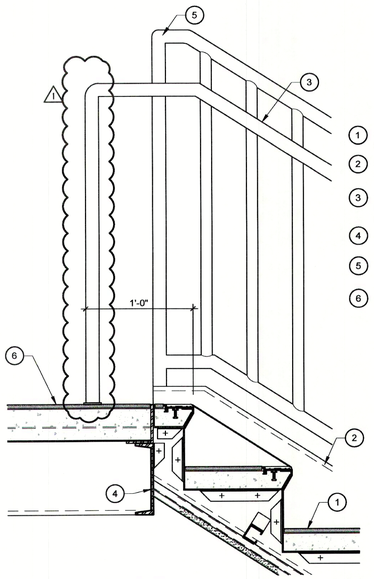

1. STEEL PAN TREADS & RISERS WITH CONC. FILL
2. STEEL CHANNEL STRINGER, SEE STRUCT.
3. 1-1/2" O.D. BENT STEEL PIPE HANDRAIL, VERIFY FINISH
4. STRUCT. FRAMING PER STRUCT DWGS.
5. GUARDRAIL AT OPEN STAIR, WHERE OCCURS
6. CONCRETE ON METAL DECK LANDINER PER STRUCT. / NON SLIP RUBBER OR CERAMIC NON-SLIP TILE FINISH PER FINISH SCHED.

1 STAIR B TOP TREAD & RISER

SCALE: 1 1/2" = 1-Ø"

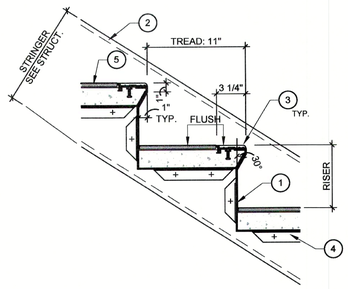

1. STEEL PAN TREADS & RISERS 16 GA., (PAINTED) WITH CONC. FILL 2" MIN.
2. STEEL CHANNEL STRINGER, SEE STRUCT.
3. SLIP RESISTANT STAIR NOSING @ EACH TREAD TYP.: 2 COMPONENT STAIR NOSING BY BALCO DXH-330 (OR APPROVED EQUAL) MILL FINISH ALUM. INSTALL PER MFR. REQUIREMENTS. FLUSH WITH STAIR FINISH, VERIFY MODEL, STYLE & COLOR WITH OWNER & ARCHITECT FOR APPROVAL PRIOR TO START.
4. STEEL CLIP ANGLE EACH TREAD TYP. 1-1/2x 1-1/2"x 6"
5. NON SLIP RUBBER / OR CERAMIC 'NON-SLIP' TILE THIN-SET ON CONCRETE

VERIFY FINISH WITH OWNER & ARCHITECT FOR FINAL APPROVAL PRIOR TO START TYP.

2 STAIR B TYP. TREAD & RISER

SCALE: 1 1/2" = 1-Ø"

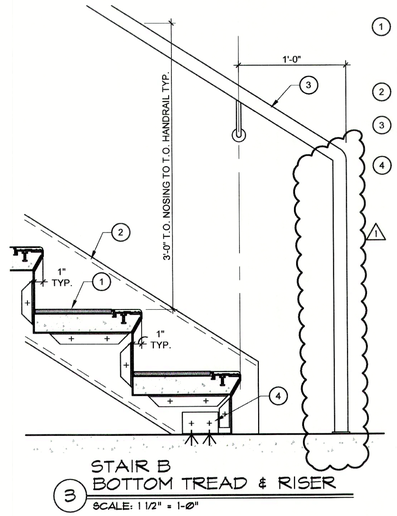

1. NON SLIP RUBBER/ OR CERAMIC 'NON-SLIP' TILE THIN-SET ON CONCRETE (CONCRETE FILL) /STEEL PAN TREADS & RISERS
2. STEEL CHANNEL STRINGER, SEE STRUCT.
3. 1-1/2" O.D. BENT STEEL PIPE HANDRAIL, VERIFY FINISH
4. CLIP ANGLE W. 3/4" DIA. ANCHOR BOLTS (2) MIN.

3 STAIR B BOTTOM TREAD & RISER

SCALE: 1 1/2" = 1-Ø"

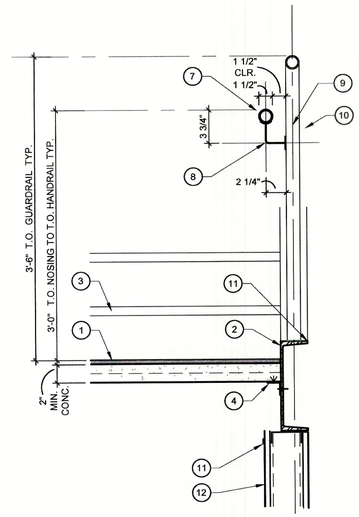

1. NON SLIP RUBBER / OR CERAMIC 'NON-SLIP' TILE THIN-SET ON CONCRETE (CONCRETE FILL) /STEEL PAN TREADS & RISERS
2. STEEL CHANNEL STRINGER, SEE STRUCT.
3. SLIP RESISTANT STAIR NOSING @ EACH TREAD
4. STEEL CLIP ANGLE EACH TREAD TYP. 1-1/2x 1-1/2"x 6"
5. NOT USED
6. NOT USED
7. 1-1/2" O.D. STEEL PIPE HANDRAIL, VERIFY FINISH
8. STEEL HANDRAIL BRACKET & PLATE
9. CONT. 1/8" STEEL PLATE BACK-UP AT HANDRAIL BRACKET
10. STUD BLOCKING
11. CONT. FIRE RATED CAULK
12. 5/8" GYP. BD. & 3-5/8" METAL STUD PARTITION BELOW STAIR - 1 HOUR FIRE RATED / UL DES NO. U465

5 STAIR B RISER & HANDRAIL

SCALE: 1 1/2" = 1-Ø"

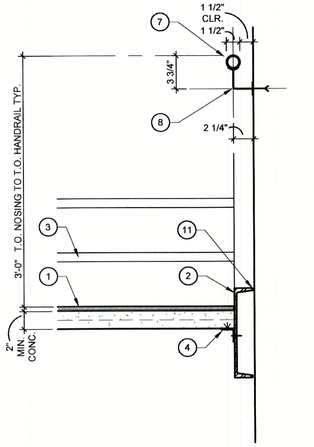

1. NON SLIP RUBBER/ OR CERAMIC 'NON-SLIP' TILE THIN-SET ON CONCRETE (CONCRETE FILL) /STEEL PAN TREADS & RISERS
2. STEEL CHANNEL STRINGER, SEE STRUCT.
3. SLIP RESISTANT STAIR NOSING @ EACH TREAD
4. STEEL CLIP ANGLE EACH TREAD TYP. 1-1/2x 1-1/2"x 6"
5. NOT USED
6. NOT USED
7. 1-1/2" O.D. STEEL PIPE HANDRAIL, VERIFY FINISH
8. STEEL HANDRAIL BRACKET & PLATE
9. CONT. 1/8" STEEL PLATE BACK-UP AT HANDRAIL BRACKET
10. STUD BLOCKING
11. CONT. CAULK

6 STAIR B RISER & HANDRAIL

SCALE: 1 1/2" = 1-Ø"

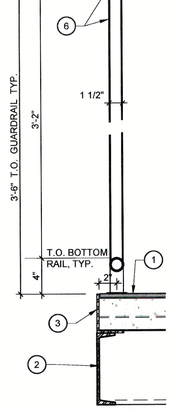

1. NON SLIP RUBBER/ OR CERAMIC 'NON-SLIP' TILE THIN-SET ON CONCRETE (CONCRETE FILL) /STEEL PAN TREADS & RISERS
2. FRAMING, SEE STRUCT.
3. STEEL BENT PLATE CLOSURE, PAINTED
4. 1-1/2" O.D. STEEL PIPE HANDRAIL, VERIFY FINISH
5. NOT USED
6. 1-1/2" O.D. STEEL PIPE GUARDRAIL, VERIFY FINISH
7. 1-1/4" O.D. STEEL PIPE GUARDRAIL VERTICAL 'PICKETS', VERIFY FINISH

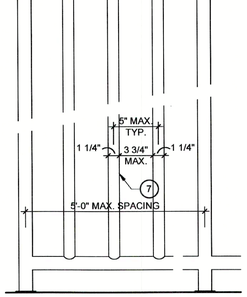

7 STAIR B GUARDRAIL AT LANDING

SCALE: 1 1/2" = 1-Ø"

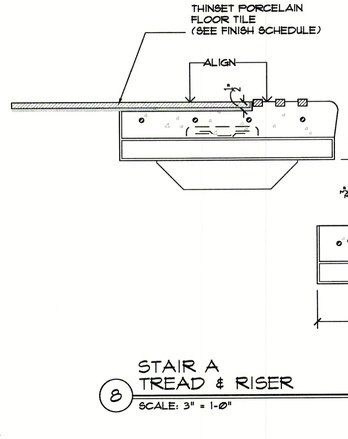

8 STAIR A TREAD & RISER

SCALE: 3" = 1-Ø"

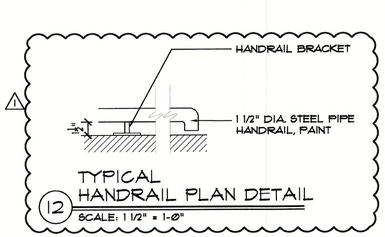

12 TYPICAL HANDRAIL PLAN DETAIL

SCALE: 1 1/2" = 1-Ø"

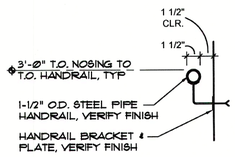

11 TYPICAL HANDRAIL CLEARANCE

SCALE: 1 1/2" = 1-Ø"

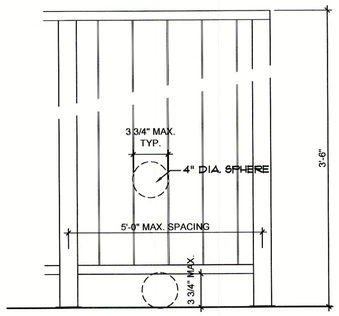

10 STAIR A GUARDRAIL

SCALE: 1 1/2" = 1-Ø"

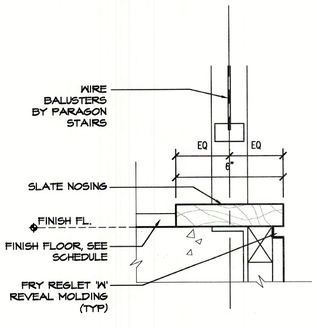

9 STAIR A SLAB EDGE

SCALE: 3" = 1-Ø"

LIBERTY PLAZA SUITES

500 COMMERCE STREET
HAWTHORNE, NY 10532

ARCHITECT

dimovski architecture
59 Kensico Road, Thornwood, NY 10594
(914) 747-3500 | (914) 747-3588 fax
www.dimovskiarchitecture.com

STRUCTURAL ENGINEER

CHARLES A. MANGANARO
CONSULTING ENGINEERS
A PROFESSIONAL CORPORATION
303 SOUTH BROADWAY, SUITE 223, TARRYTOWN, NY 10591-5488
SHAILESH R. NAIK, P.E.
NEW YORK LICENSE No. 072797-1

MEP ENGINEER

GLA Consulting Engineers
50 Broadway,
Hawthorne, NY 10532
914.747.3500
8 West 38th Street,
Suite 501
New York, NY 10018
646.646.4110
glcce.com

NO.	REVISION/ISSUE	DATE
3	ISSUE FOR DOB COMMENT ⚠1	04/26/2021
2	ISSUE FOR PRICING	03/16/2021
1	ISSUE FOR PERMIT	03/12/2021

SEAL

REGISTERED ARCHITECT
JAQUETTE DIMOVSKI
032302
STATE OF NEW YORK

PROJECT

LIBERTY PLAZA SUITES
500 COMMERCE ST.
TOWN OF MT. PLEASANT, NY

DATE:	AUGUST 12, 2020
PROJECT NO:	DA 2034
DRAWN BY:	YK
CHECKED BY:	PD/SGD
SCALE:	AS NOTED

DRAWING TITLE

STAIR DETAILS

SHEET NO.

A-502

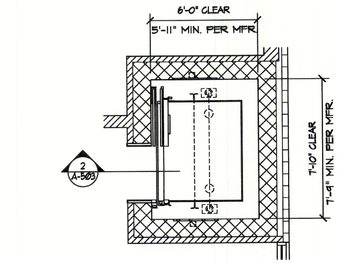

3RD FLOOR PLAN

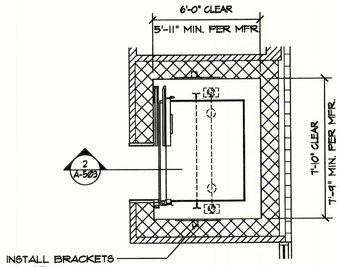

2ND FLOOR PLAN

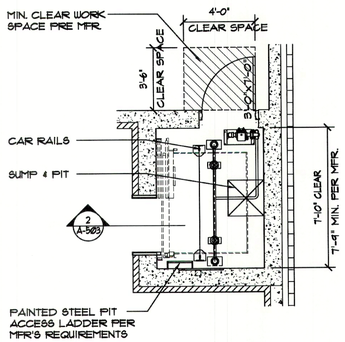

1ST FLOOR PLAN
(GARAGE LEVEL)

1 ENLARGED PLANS AT ELEVATOR
1/4"=1'-0"

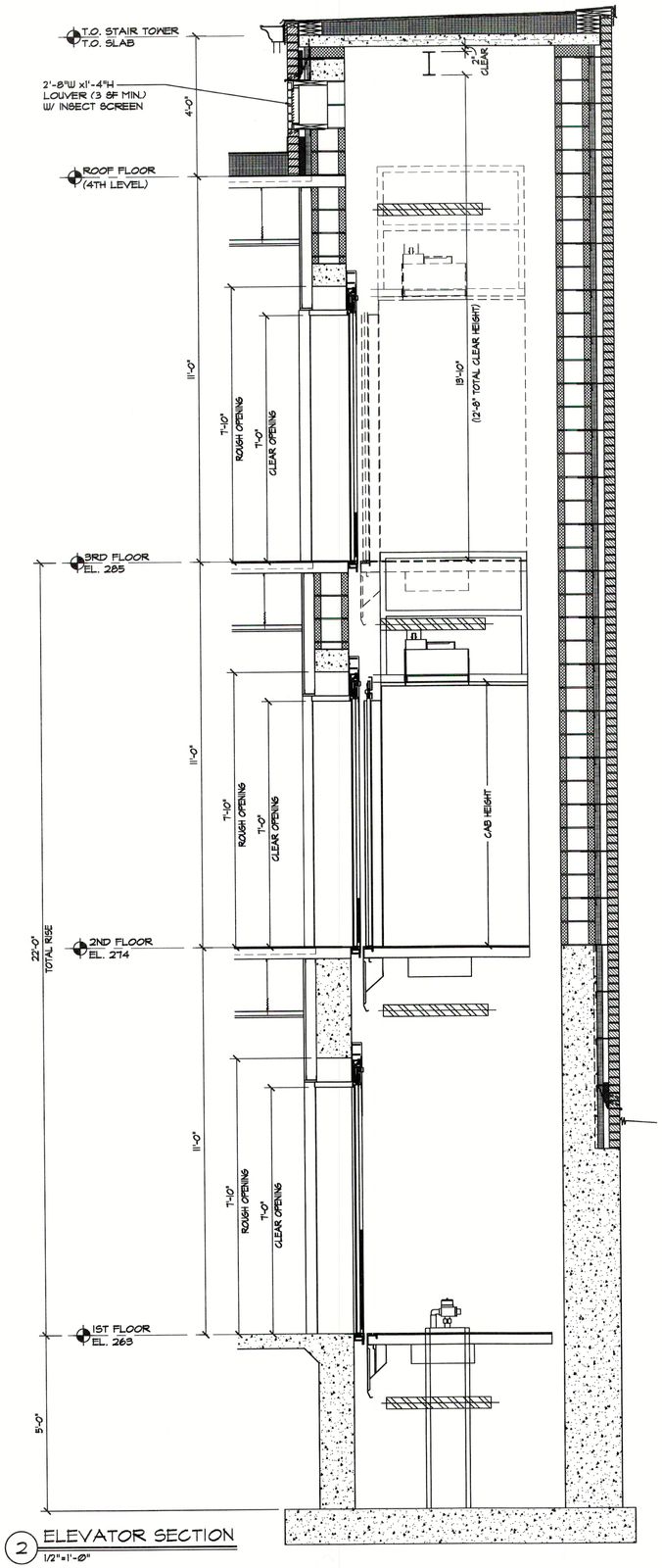

2 ELEVATOR SECTION
1/2"=1'-0"

ELEV. No.	DUTY	SPEED	SERVICE TYPE
1	2100#	100 F.P.M.	PASSENGER

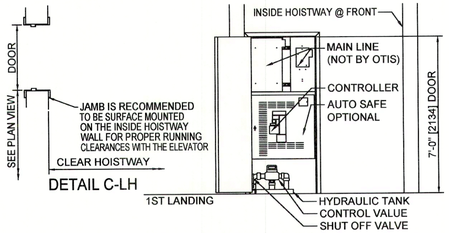

DETAIL C-LH

CONTROLLER / MAIN LINE / TANK IN PIT @ BOTTOM LANDING REQUIREMENTS

NOTE 18A
DOOR MUST BE LOCATED ON AN INTERIOR WALL OF THE BUILDING, IT CANNOT BE OPENED TO THE OUTSIDE OF A BUILDING.

NOTE 18B
CONTACT OTIS REPRESENTATIVE FOR MRL ACCESS DOOR LOCATION GUIDELINE DRAWINGS.

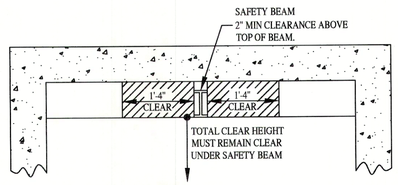

OVERHEAD BEAM CLEARANCE

SEE NOTE 13 ON PAB0 SHEET

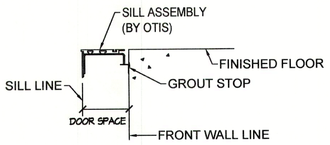

DETAIL "A"
SILL SUPPORT

ADEQUATE SUPPORT AT ALL FASTENING POINTS OF ENTRANCE ASSEMBLY REQUIRED. MUST WITHSTAND A HORIZONTAL PULL-OUT FORCE OF 140 LBS. @ EA. FASTENING POINT (8 @ EA. ENTRANCE) INCLUDING SUPPORT FOR CENTER SILL SUPPORT BRACKET (NOT BY OTIS).

RAIL FORCE DETAIL

*THIS FORCE INCLUDES IMPACT SEE NOTES 8 & 9

ELEV. NO.			
1	SEISMIC	VX	1410 lbs
		VY	705 lbs
	APPLICATION	R1	147 lbs
		R2	72 lbs
*EACH BUFFER IMPACT LOAD			11184 lbs
*EACH CYLINDER IMPACT LOAD			8700 lbs
CAR MAXIMUM BRACKET SPACING			14'-0"
PLUNGER MAXIMUM BRACKET SPACING			14'-0"

FIRST INTERMEDIATE RAIL SUPPORT LOCATION TO BE LOCATED 14' 0" FROM PIT FLOOR. ALL OTHER INTERMEDIATE SUPPORTS CANNOT EXCEED THE MAXIMUM BRACKET SPACING IN THE RAIL FORCE & BRACKET SPACING DETAIL

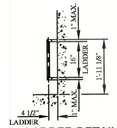

LADDER DETAIL
ELEV. No. 1

LIBERTY PLAZA SUITES

500 COMMERCE STREET
HAWTHORNE, NY 10532

ARCHITECT
dimovski architecture
59 Kensico Road, Thornwood, NY 10594
(914) 747-3500 | (914) 747-3588 fax
www.dimovskiarchitecture.com

STRUCTURAL ENGINEER
CHARLES A. MANGANARO
CONSULTING ENGINEERS
A PROFESSIONAL CORPORATION
303 SOUTH BROADWAY, SUITE 223, TARRYTOWN, NY 10591-5488
SHAILESH R. NAIK, P.E.
NEW YORK LICENSE No. 072797-1

MEP ENGINEER
CLA Consulting Engineers
50 Broadway, Hawthorne, NY 10532
914.747.2800
5 West 38th Street, Suite 501, New York, NY 10018
646.846.4110
clase.com

NO.	REVISION/ISSUE	DATE
1	ISSUE FOR PERMIT	03/12/2021

SEAL
REGISTERED ARCHITECT
PAULETTE DIMOVSKI
032901
STATE OF NEW YORK

PROJECT
LIBERTY PLAZA SUITES
500 COMMERCE ST.
TOWN OF MT. PLEASANT, NY

DATE:	AUGUST 12, 2020
PROJECT NO:	DA 2034
DRAWN BY:	YK
CHECKED BY:	PD/SGD
SCALE:	AS NOTED

DRAWING TITLE
ELEVATOR PLANS & SECTION

SHEET NO.
A-503

ELEVATOR MANUFACTURER GENERAL NOTES

The following items must be performed or provided at no cost to Otis Elevator Company ("OTIS") by the Owner or General Contractor or their agents in accordance with governing codes. The price and installation schedule of Otis is based on these jobsite conditions existing at the beginning and during installation of the elevator equipment. Failure to provide the items specified in this list will result in additional work performed by Otis beyond the scope of our contract causing installation delays. A change order will be submitted by Otis for materials and / or labor expended. All work to be performed per the latest revision of the applicable national code and / or local code.

General Prep / Work

1. Provide any cutouts to accommodate elevator equipment (troughing, venting, and hall fixtures) along with patching and painting of walls, floors, or partitions together with finish painting of entrance doors and frames, if required.
2. Provide tractor trailer access to the building for unloading of material and an onsite storage area for elevator equipment as follows: dry and enclosed, provides roll-able access to the elevator hoistway at the ground level, located within 100 feet (30.5 meters) of the hoistway, and is larger than 25 x 20 feet (1620 mm X 6096 mm) per elevator. Any warranties provided by Otis for elevator equipment are null and void if equipment is stored in a manner other than a dry enclosed building structure.
3. Provide sufficient onsite refuse containers for the proper disposal of elevator packaging material. Should sufficient refuse containers not be provided, disposal of packaging material shall become the responsibility of the owner.

Hoistway and Pit Prep / Work

4. Prior to the start of installation, provide a dry, properly framed, enclosed and vented hoistway in accordance with all applicable codes.
5. Provide a clear plumb hoistway with variations from the size shown on the Otis layout not to exceed -0 inch / +1 inch (25 mm).
6. Install per Machine Room / Machine Space Prep / Work and Electrical Requirements.
   Provide a rough opening for and install a 3' X 7' standard fire rated interior door on one side of the hoistway, as shown on the Otis layout. The machine Space access door must not be on an outside wall. When determining the location of the machine space door, the dimension on the Otis layout is from the inside door edge of the jamb and not the door stop edge. Please be advised that this door location is very critical. Follow door manufacturing instructions for the different types of hoistway wall material and make the appropriate adjustments so that this door will be placed in the proper location.
   The door frame must be securely mounted to the wall to sustain a cantilevered / horizontal force exerted by the electrical disconnect(s), electrical conduit, and wiring up to an approximate 325 lb. load. Install per Machine Room / Machine Space Prep / Work and Electrical Requirements. The door hand and opening is dependent on configuration, see the general contractor guide or talk to your Otis representative.
7. Furnish adequate rail bracket supports and bracket spacing as required by governing code from pit floor to top of hoistway. For steel or wood frame construction, adequate backing for a rail bracket to be installed not less than 10'-3" (3124 mm) or more than 11'-3" (3424 mm) from the top landing. Furnish separator beams where required. Rail bracket attachment supports must be exposed and flush with the clear hoistway line.
   If the floor to floor height exceeds the maximum bracket spacing allowed by the elevator code, Otis requires some form of steel support to properly attach our guide rail brackets. The maximum allowed bracket spacing is indicated in the rail force and bracket detail table on the Otis layout. Any rail bracket mounting surfaces that are not in line with the finished hoistway dimension (i.e. the clear hoistway line) may need to be extended to meet the required distance. Otis agrees to provide guidance on this matter at the appropriate time.
   If rail bracket embedded plates or inserts are provided by Otis, they shall be installed by others in accordance with Otis? documentation and instruction.
   If vertical tube steel is utilized as rail support, see the Otis layout for any specific requirements.
   When a Machine space is used, with a second floor controller / tank location, furnish adequate Tank Stand supports flush with the hoistway wall when the following hoistway construction material is used; cmu block, steel frame, or wood.
   The support can be any of the following; header beams, steel tube, inserts, or embedded plates at locations specified as per Otis layout.
   Note: When a support is provided, it should be able to withstand the force shown on Otis contract layout for seismic and non seismic condition.
   Concrete hoistways walls do not require supports for Tank stand
8. Furnish a dry pit reinforced to sustain vertical forces on car rails and impact loads on cylinder head(s) and buffer(s). The pit must be dry and clean. The elevator pit must have a floor drain or sump pump to prevent the accumulation of water. Location to be coordinated with Otis to avoid all elevator components and access areas. In areas requiring Firefighter?s Emergency Operation, a sump pump / drain shall be provided that shall have the capacity to remove a minimum of 11.4 m^3 / h (3,000 gal / h) per elevator (2.2.2.5, ASME A17.1-2007 / CSA B44-07). Otis recommends that the owner verify the system complies with all applicable laws and local codes.
9. Provide and install a fixed vertical iron ladder in each pit as required by governing code and located per Otis layouts, or as coordinated with Otis personnel. Ladder width and pit wall pocket requirements are shown in the pit plan view on the Otis layout. For entrance heights of up to 7' (2134mm) the top rung of the ladder must be even with the bottom landing. For entrance heights greater than 7' (2134mm) the top rung must be 12" (305mm) above the bottom landing. Hand grips must be provided to a height of 4' (1219mm) above the bottom landing. Hand grips must have 4-1/2" (114mm) radial clearance, from their centerline, to any obstruction in the hoistway. (Refer to the detail views for typical ladder arrangement) If pit depth is greater than 9'-10" (3000 mm) [13'-9" (4191 mm) with no floor below bottom landing], a pit access door is required.
10. A.) Protection from Falls:
    As required by the Occupational Safety and Health Administration (OSHA) 1926.502 (B) (1-3), a freestanding removable barricade at each hoistway opening at each floor. Barricades shall be 42^ (1067 mm) high, with mid-rail and kick board, and withstand 200 lbs. (90.7 kg) of vertical and horizontal pressure.
    B.) Protection from Falling Objects:
    As required by the Occupational Safety and Health Administration (OSHA) 1926.502(j), hoistway protection from falling debris and other trades materials by either:
    1.) Full entrance screening / mesh in front of all elevator entrances.
    2.) Secured / controlled access to all elevator lobbies (lock and key) with posted Notice ©Only Elevator Personnel Beyond This Protection.^
    Notes:
    - Items A.) and B.) can be integrated systems.
    - Hoistway barricades and screening shall be constructed, maintained, and removed by others.
11. TOP and BOTTOM landings (and the MAIN landing where applicable), are not to be constructed until after all elevator equipment is installed in the hoistway. The entire front wall must be open for installation with the following rough opening dimensions (to be shown on layouts):
    -Rough Opening Width= CLEAR HOISTWAY WIDTH
    -Rough Opening Height 2642mm (8'-8") for a 2134mm (7') entrance height
    2947mm (9'-8") for a 2438mm (8') entrance height
    Remaining front entrance walls are not to be constructed until after door frames and sills are in place. The rough openings, per sizes shown on the Otis layout, are required. Prior to the completion and turnover of the elevator(s), all entrance walls must be installed and rough openings filled in complete to maintain fire rated hoistway requirements.
12. Provide adequate support at all fastening points of each entrance. Provide plumb vertical surfaces for entrances and sill supports, one above the other, and square with the hoistway. For 4'-0" (1219 mm) and 4'-6" (1372 mm) two speed door arrangements, an additional hoistway attachment point is required for an auxiliary support bracket under the sill assembly in the center of the clear door opening. Finish floor and grout, if required, between door frames to sill line. A horizontal support is to be provided 1 foot (305 mm) above the clear opening at the top landing to support the door frame assembly. If floor heights exceed 12'-0" (3658 mm), a horizontal support is to be provided 1 foot (305 mm) above the clear opening. If transoms are required, the support would be 1 foot (305 mm) above the transom height.
13. Provide and install a steel safety beam per elevator, from side wall to side wall at the top of the hoistway, capable of withstanding a maximum live net load of 5000 lb. (2268 kg). Otis requires 2" (51 mm) clear above the beam. Total clear overhead must cover entire width and depth of the hoistway. An area consisting of the width of the hoistway by 16" depth on each side of the hoist beam must be left clear to the top of the hoistway.
14. Glass used in hoistway construction must block 98% or more of incident full spectrum ultraviolet radiation for the full height of the hoistway.
15. If an emergency door in a blind hoistway is required, provide an outward swinging single section type door with door closer and a self closing barrier per ASME A17.1-2007, section 2.11.1.2. Contact your local Otis personnel for a detailed drawing (AAA264OOD_FMI), showing Otis specific requirements.

Machine Room / Machine Space Prep / Work

16. When a machine room is used, provide a suitable dry machine room with access and ventilation in accordance with all applicable codes and regulations. The machine room is to be maintained at a temperature between 60ºF (15.5ºC) and 100ºF (38ºC). When a machine space is used, the machine space will be in the hoistway behind the metal door installed per Hoistway and Pit Prep / Work above with ventilation in accordance with all applicable codes and regulations. The machine space is to be maintained at a temperature between 32ºF (0ºC) and 104ºF (40ºC). Relative humidity not to exceed 95% non-condensing. Local codes may require tighter temperature ranges. The temperature and humidity range shall be permanently posted in the machine room / machine space. Please check with your local code authority for the exact requirements in your area.
17. Machine room and Machine space doors to meet code compliant fire resistive construction. When a machine room is used, provide a self closing (local building code dependent) and self locking door with a group 2 locking device. When a machine space is used, provide a standard 3' x 7' self closing (local building code dependent) and self locking metal door with a group 2 locking device in the hoistway per Otis layout. In addition, ensure that all air gaps around the machine room / machine space door are sealed (i.e. threshold, weather stripping, etc.). Self closing mechanism cannot protrude into the machine space at any time. The machine space door knob shall have a blank plate on the hoistway side of the door.
18. When a machine space is used, Otis will provide a metal shroud and metal shroud cover to be mounted on the hoistway side of the machine space door frame per Otis layout. The metal shroud will accommodate the mounting of the main electrical feeder system, fused disconnect switch or circuit breaker for car lighting, and the convenience outlet. Conduit knockouts through the metal shroud cover will be required as needed to access the disconnect switches or circuit breakers, and convenience outlet. See Electrical Requirements.
    [Note: Consult with the Otis Representative at your location concerning the metal shroud mentioned above for machine space applications.]
19. [Refers to elevators with remote machine rooms requiring buried piping and wire way] Provide trenching and backfilling as necessary to accommodate remote machine room conditions.

Fire Prevention Prep / Work

20. Provide hoistway walls designed and constructed in accordance with the required fire rating (including those places where elevator fixture boxes and rail bracket fastenings penetrate into the hoistway walls).
21. In the United States, provide smoke detectors, located as required, with wiring from the sensing devices to the controller(s) designated by Otis.
    a. For each group of elevators, provide a normally closed contact representing the smoke detector at the designated return landing.
    b. For each group of elevators, provide a normally closed contact representing all smoke detectors located in lobbies, hoistways, or machine rooms / machine space, but not the smoke detector at the designated return landing (see above) or the smoke detectors as described in i. and ii. below:
       i. If a smoke detector is located in the hoistway at or below the lower of the two recall landings, it shall be wired to activate the same normally closed contact as the smoke detector located in the lobby at the lower of the two recall landings.
       ii. If machine rooms / machine space is located at the designated return landing, the smoke detectors located therein shall be wired to activate the same normally closed contact as the smoke detector at the designated landing.
    c. Requirements for intermittently illuminating the fire hat visual signal in the car operating panel, either i. or ii. apply.
       i. For a single unit or for a group of elevators having one common machine room / machine space and one common hoistway, provide one additional normally closed contact representing the machine room / machine space and hoistway smoke detectors.
       ii. If the group contains more than one hoistway and hoistway smoke detectors are installed, or if the group has more than one machine room / machine space, provide one normally closed contact for each elevator. The contact is to represent the smoke detector in the machine room / machine space for that particular elevator, and any smoke detectors in the hoistway containing that particular elevator.
22. In Canada, provide smoke detectors, located as required, with wiring from the sensing devices to the controller(s) designated return landing.
    a. For each group of elevators, provide a normally closed contact representing the smoke detector at the designated return landing and, if provided, from the sensing device in the pit.
    b. For each group of elevators, provide a normally closed contact representing all smoke detectors located in elevator lobbies, but not the smoke detector at the designated return landing (see above) and, if provided, from the sensing device in the top of the hoistway.
    c. For each group of elevators, provide a normally closed contact representing the smoke detector in the elevator machine room / machine space(s).
    d. If the machine room / machine space is located at the designated return landing, the smoke detectors located therein shall be wired to activate the same normally closed contact as the smoke detector at the designated landings. When a machine room is used, for each group of elevators, provide in addition to the above, a normally closed contact representing the sensing devices in the machine room and, if provided, in the pit or at the top of the hoistway (for the Fire Hat in the Elevator).
23. In the United States, if sprinklers are installed in the hoistway or machine room / machine space(s), a means to automatically disconnect the mainline power supply to the affected elevator and any other power supplies used to move the elevator, upon or prior to the application of water is required (unless prohibited by local code). Smoke detectors shall not be used to activate sprinklers in hoistways or machine rooms / machine spaces or to disconnect the mainline power supply.
24. Provide a Class "ABC" fire extinguisher, minimum 10 lbs., in the machine room or in a location convenient to the machine space.

Electrical Requirements

25. All 125 volt, 15 or 20 ampere single phase receptacles installed in pits, machinery spaces, and elevator car tops shall be of ground fault circuit interrupter (GCFI) type. All 125 volt, 15 or 20 ampere single phase receptacles installed in machine rooms / machine spaces shall have GFCI protection. A dedicated single phase receptacle supplying a permanently installed pit sump pump shall not require GFCI protection. (NEC 620-85 or CEC Rule 38-085).
26. Furnish a dedicated, balanced, 3 phase, 3 wire electrical feeder system with a separate solidly grounded equipment grounding conductor terminating in the machine room / machine space. Size of the feeders and grounding conductor to suit elevator power characteristics. Feeder conductors and grounding conductor must be copper. A fused disconnect switch or circuit breaker capable of being locked in the open position for each elevator per the National Electrical Code (ANSI/NFPA 70) or Canadian Electrical Code (C22.1) with feeder or branch wiring to the controller (NEC 620-51, 620-61(D), and 620-62 or CEC Rule 38-013(2)(a)) must be provided. Fuses are to be current limiting class RK1 or equivalent. Circuit breakers are to have current limiting characteristics equivalent to class RK1 fuses. Fuses or circuit breakers are to be time delay to cover the full load up accelerating current as listed in the Otis Confirmation of Power Supply form.
    [Note: If the 3 phase power to the control system is simulated (not from the utility), by use of a phase converter system, the phase converter must have all three phases balanced. Digital phase converter is required.]
    Furnish a separate 120 volt, 15 ampere single phase branch circuit and SPST fused disconnect switch or circuit breaker capable of being locked in the open position to supply the car lights, receptacles, auxiliary lighting power source, and ventilation on each car in compliance with the National Electrical Code must be provided.
    When a machine room is used and where practical, disconnects shall be located adjacent to the door of the machine room enclosure. When a machine space is used, disconnects or circuit breakers shall be located behind the door of the machine space per Otis layout.
    Branch circuit wiring to each controller (NEC 620-53 or CEC Rule 38-053) must be provided.
    For machine room applications, a convenience outlet and a suitable light, of not less than 200 Lux (19FC) as measured at floor level must be provided in the machine room with a light switch located within 18" (456 mm) of lock jamb side of machine room door.
    For machine space applications a convenience outlet located inside the machine space door and a suitable light located outside the machine space door on the lock jamb side, of not less than 200 Lux (19FC) as measured at floor level must be provided per Otis layout. The machine space light circuit shall be a dedicated circuit separate from other lighting circuits. (NEC 620-23 or CEC Rule 38-023)
    A convenience outlet and light fixture of not less than 100 Lux (10FC) as measured at the pit floor level must be in the pit with a light switch located adjacent to the pit access door (NEC 620-24 or CEC Rule 38-024). The light bulb(s) shall be externally guarded to prevent contact and accidental breakage.
    [Note: Consult with the Otis Construction Superintendent at your location concerning the following paragraph.]
    To meet the date upon which the elevators are to be turned over, the permanent 3 phase feeder system and protective devices must be installed and power available prior to the start of elevator installation.
27. Provide 120 volt, 20 ampere power for light, tools, hoist, etc. to the hoistway during installation. Source must be within 75 feet (22.86 M) of the hoistway.
28. Provide one (1) dedicated outside telephone line per elevator car to the elevator machine room / machine space(s), and terminated at the controller designated by the Otis construction superintendent. Reference the A17.1/CSA-B44 code and the Otis Confirmation of Power Supply for specific requirements.
29. [Optional for Elevators with an intra building intercom] Provide a separate 120 volt, 15 ampere, single phase power supply with fused SPST disconnect switch or circuit breaker located as required for intercommunicating system power supply. Circuit to be arranged for feeding from the building emergency lighting supply if provided. Conduit and wiring for remotely located intercommunicating stations must be provided.
30. [Optional for Elevators with a Battery Powered Emergency Return Unit (ERU)] Provide the disconnecting means required by the National Electrical Code (NEC) or Canadian Electrical Code (CEC) with an auxiliary contact and wiring to the controller. The auxiliary contact is to be positively open when the main disconnecting means is open. The auxiliary contact shall cause the ERU power source to be disconnected from its load when the disconnecting means is in the open position. Size of main contacts to suit elevator power characteristics.
    [Additional ERU Requirement]
    In the United States, heat sensors used to automatically disconnect the mainline power supply prior to the application of water from sprinklers shall be provided with a normally closed contact with wiring from the sensing device to a controller designated by Otis. The normally closed contact shall be closed when the heat sensor is not activated and shall be open when the heat sensor is activated.
31. [Optional for Installations with Emergency (Standby) Power] Provide the emergency (standby) power unit and means for starting it, and deliver to the elevator via disconnect switches in the machine room / machine space, sufficient power to operate one or more elevators at a time at full rated speed and rated load.
    An automatic Power Transfer Switch is required for each power feeder to monitor both Normal and Emergency (Standby) Power conditions and to perform the transfer from one to the other. Switch to have two sets of normally closed dry contacts, one to be open when the switch is in the Emergency (Standby) Power position, the other to open upon initiation of power transfer and to close when transfer is complete. Switch to have an inhibit function which will delay transfer to Normal and / or Emergency (Standby) Power by an adjustable period of 0 - 300 seconds. Switch shall have a Phase Monitor feature, which prohibits the transfer of power between "live" sources unless the sources are in phase with each other. If a Shunt Trip device is provided, an additional Normally Closed contact is required from the Emergency (Standby) Power source.
    Emergency (standby) power system shall be connected to the 125 volt power circuit as noted in A.3 of the Confirmation of Power Supply for the branch circuit supplying the car lights, car top receptacle, auxiliary car lighting power source and car ventilation.

You agree to indemnify and save Otis harmless against any and all liability and costs arising out of your failure to carry out any of the foregoing requirements.

LIBERTY PLAZA SUITES

500 COMMERCE STREET
HAWTHORNE, NY 10532

ARCHITECT
dimovski architecture p.c.
59 Kensico Road, Thornwood, NY 10594
(914) 747-3500 | (914) 747-3588 fax
www.dimovskiarchitecture.com

STRUCTURAL ENGINEER
CHARLES A. MANGANARO CONSULTING ENGINEERS
A PROFESSIONAL CORPORATION
303 SOUTH BROADWAY, SUITE 223, TARRYTOWN, NY 10591-5488
SHAILESH R. NAIK, P.E.
NEW YORK LICENSE No. 072797-1

MEP ENGINEER
OLA Consulting Engineers
50 Broadway,
Hawthorne, NY 10532
914.747.2800
&
5 West 30th Street,
Suite 501
New York, NY 10018
646.646.4110
ola-ce.com

NO.	REVISION/ISSUE	DATE
1	ISSUE FOR PERMIT	03/12/2021

SEAL
REGISTERED ARCHITECT JAULETTE DIMOVSKI 032161 STATE OF NEW YORK

PROJECT
LIBERTY PLAZA SUITES
500 COMMERCE ST.
TOWN OF MT. PLEASANT, NY

DATE:	AUGUST 12, 2020
PROJECT NO:	DA 2034
DRAWN BY:	YK
CHECKED BY:	PD/SGD
SCALE:	AS NOTED

DRAWING TITLE
ELEVATOR NOTES

SHEET NO.
A-504

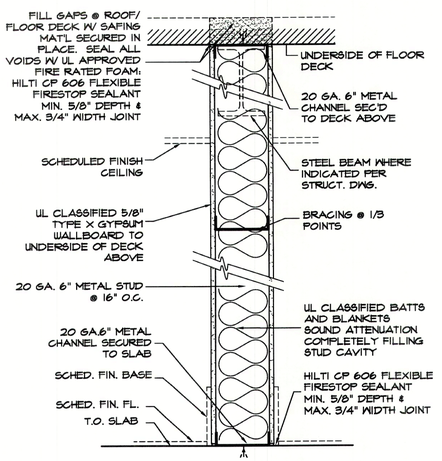

1 FULL HEIGHT PARTITION (1 HR RATED)
DESIGN NO. U465 1 1/2"=1'-0"

1A FULL HEIGHT PARTITION (1 HR RATED)
DESIGN NO. U465
SAME AS PARTITION TYPE 1 EXCEPT PROVIDE 3 5/8" METAL STUD IN LIEU OF 6" METAL STUD

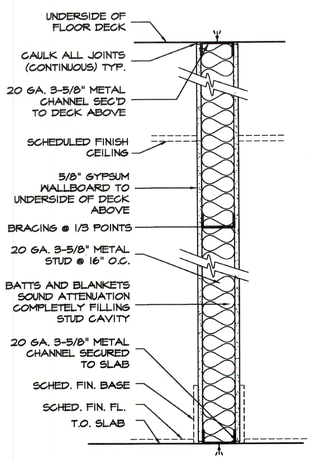

2 FULL HEIGHT PARTITION TYPE
1 1/2"=1'-0"

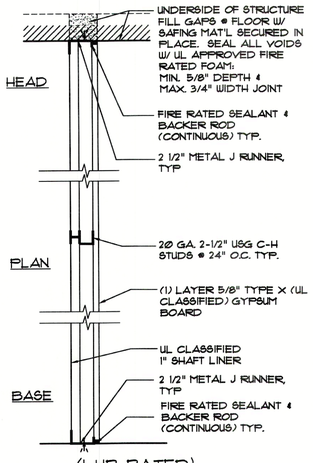

3 (1 HR RATED) PARTITION TYPE
1 1/2"=1'-0"
UL DESIGN NO. U415
SHAFT WALL

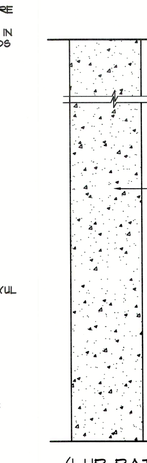

4 (1 HR RATED) PARTITION TYPE
WALL THICKNESS EXCEED MIN. REQUIRED CONCRETE THICKNESS 1 1/2"=1'-0"

4A PARTITION TYPE
SAME AS PARTITION TYPE 4 EXCEPT PROVIDE 10" CONCRETE WALL

4B PARTITION TYPE
SAME AS PARTITION TYPE 4 EXCEPT PROVIDE 12" CONCRETE WALL

4C PARTITION TYPE
SAME AS PARTITION TYPE 4 EXCEPT NON FIRE RATED WALL

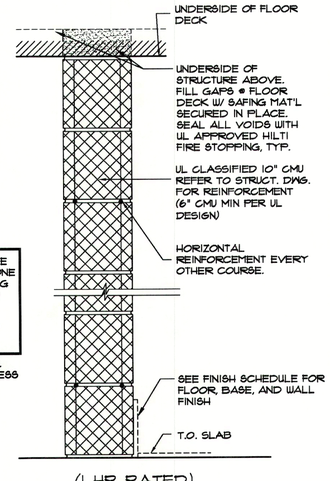

5 (1 HR RATED) PARTITION TYPE
UL DESIGN NO. U906
(UL LISTED FOR 2 HR BY DESIGN ONLY)

5A PARTITION TYPE
SAME AS PARTITION TYPE 5 EXCEPT PROVIDE 12" CMU WALL

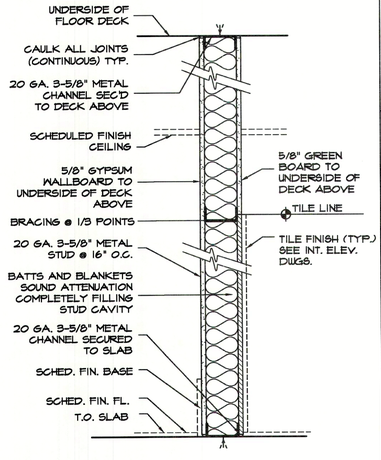

6 PARTITION TYPE
1 1/2"=1'-0"

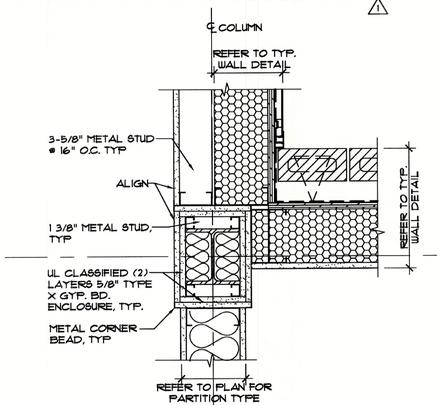

7 (1 HR RATED) PARTITION TYPE
UL DESIGN NO. X528 1 1/2"=1'-0"

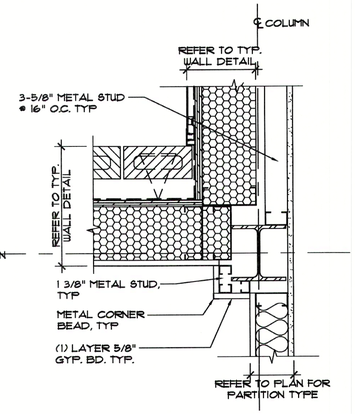

9 PLAN DETAIL
NON-FIRE RATED

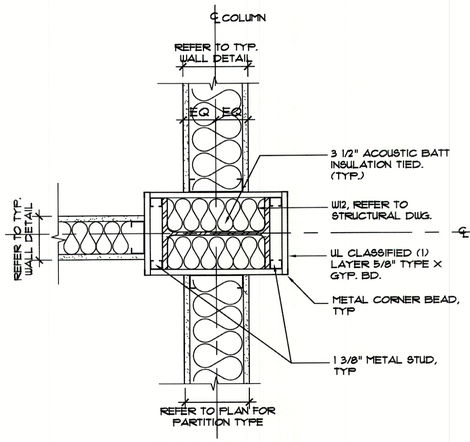

8 (1 HR RATED) PARTITION TYPE
UL DESIGN NO. X528 1 1/2"=1'-0"

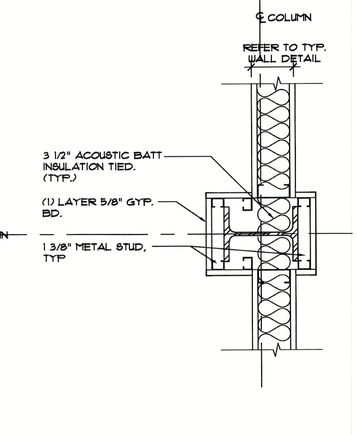

10 PLAN DETAIL
NON-FIRE RATED

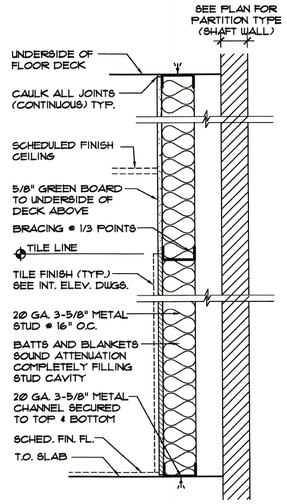

11 PARTITION TYPE
1 1/2"=1'-0"

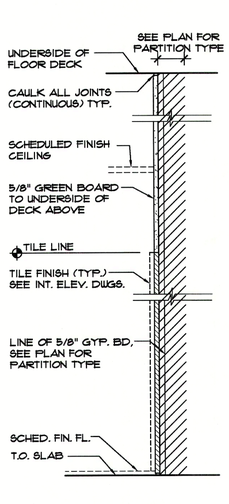

12 PARTITION TYPE
1 1/2"=1'-0"

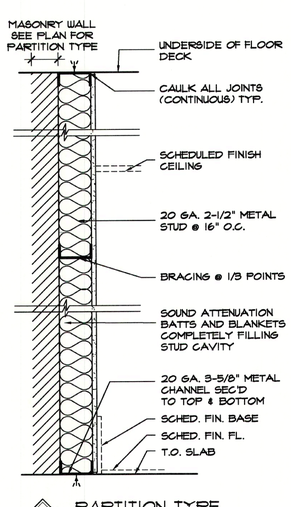

13 PARTITION TYPE
1 1/2"=1'-0"

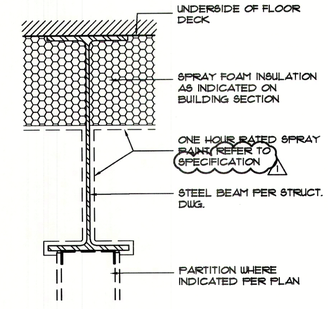

14 (1 HR RATED) FIRE BARRIER AT STEEL BEAM
1 1/2"=1'-0"

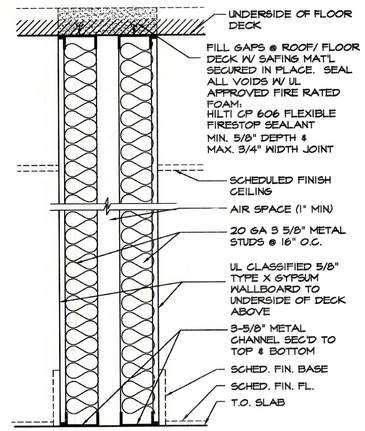

15 (1 HR RATED) FULL HEIGHT PARTITION TYPE
DESIGN NO. UL V446

LIBERTY PLAZA SUITES

500 COMMERCE STREET
HAWTHORNE, NY 10532

ARCHITECT
dimovski architecture PLLC
59 Kensico Road, Thornwood, NY 10594
(914) 747-3500 | (914) 747-3588 fax
www.dimovskiarchitecture.com

STRUCTURAL ENGINEER
CHARLES A. MANGANARO
CONSULTING ENGINEERS
A PROFESSIONAL CORPORATION
303 SOUTH BROADWAY, SUITE 223, TARRYTOWN, NY 10591-5488
SHAILESH R. NAIK, P.E.
NEW YORK LICENSE No. 072797-1

MEP ENGINEER
OLA Consulting Engineers
50 Broadway, Hawthorne, NY 10532
914.747.2620
6 West 30th Street, Suite 501, New York, NY 10018
646.848.4110
olace.com

NO.	REVISION/ISSUE	DATE
3	ISSUE FOR DOB COMMENT ⚠1	04/26/2021
2	ISSUE FOR PRICING	03/16/2021
1	ISSUE FOR PERMIT	03/12/2021

SEAL
REGISTERED ARCHITECT JAULETTE DIMOVSKI 032305 STATE OF NEW YORK

PROJECT
LIBERTY PLAZA SUITES
500 COMMERCE ST.
TOWN OF MT. PLEASANT, NY

DATE:	AUGUST 12, 2020
PROJECT NO:	DA 2034
DRAWN BY:	YK
CHECKED BY:	PD/SGD
SCALE:	AS NOTED

DRAWING TITLE
PARTITION TYPES

SHEET NO.
A-800

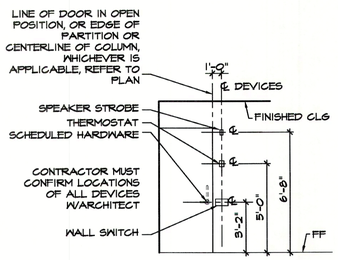

A DEVICE MOUNTING DIAGRAM
SCALE: N.T.S.

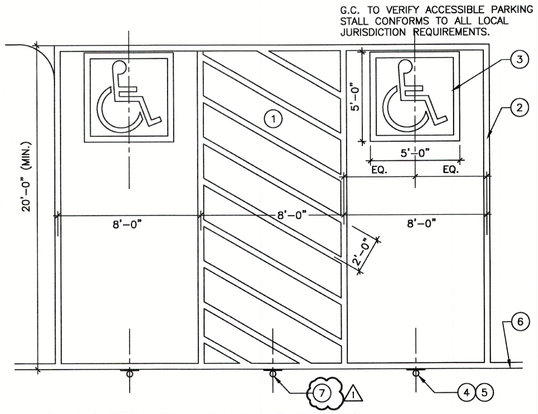

1. 8 FT. ACCESS AISLE
2. ACCESSIBLE SPACES MUST BE PROMINENTLY OUTLINED IN COLORS OR MATERIALS CONTRASTING FROM REGUALR PARKING SPACES.
   – 4" OUTLINE STRIPING REQ'D (PAINTED TRAFFIC YELLOW)
   – ACCESS AISLE SHALL BE CLEARLY MARKED (CROSSHATCHING STRIPES SPACED 2 FT. O.C.)
3. INTERNATIONAL ACCESSIBLE SYMBOL REQUIRED –4" WIDE YELLOW STRIPPING W/ BLUE BACKGROUND (2 COATS TYP)
4. POLE MOUTED ACCESSIBLE SIGN (MUST NEVER BE OBSCURED)
5. SEE 'ACCESSIBLE SIGN' DETAIL FOR REQUIRED STANDARD REGULATORY SIGN ON APPROVED SITE DWGS.
6. EDGE OF PARKING STRIP
7. POLE MOUNTED SIGNAGE READING "NO PARKING ANYTIME" SEE DETL 2/1–801, SIM

1 ACCESSIBLE PARKING SPACE
SCALE: 1/4" = 1'-0"

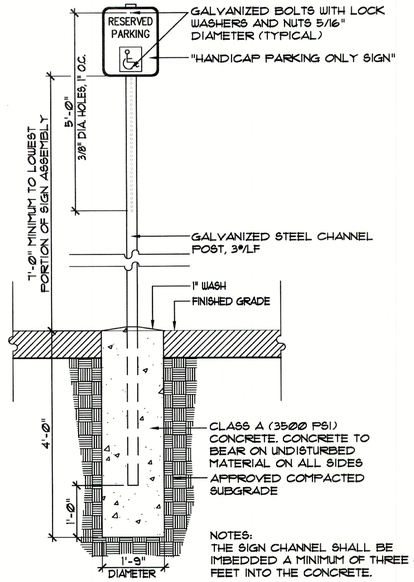

NOTES:
THE SIGN CHANNEL SHALL BE IMBEDDED A MINIMUM OF THREE (3) FEET INTO THE CONCRETE.

2 ACCESSIBLE PARKING SPACE
SCALE: 1" = 1'-0"

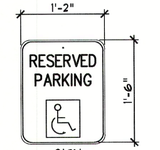

SIGN
GREEN AND BLUE ON WHITE
SCALE 1" = 1' - 0"

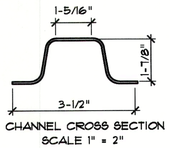

CHANNEL CROSS SECTION
SCALE 1" = 2"

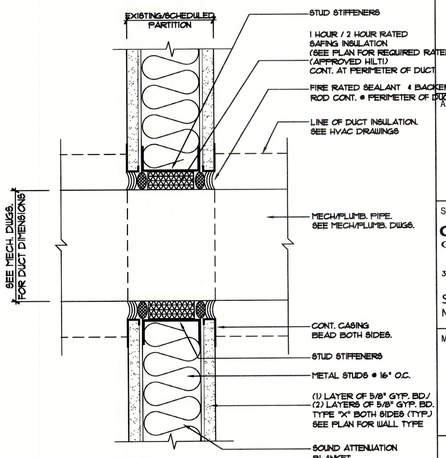

3 FIRESTOPPING DETAIL
SCALE: 3" = 1'-0"

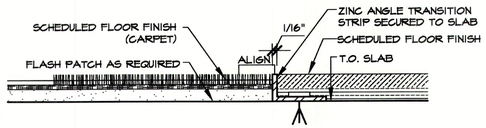

B CARPET TO TILE TRANSITION
SCALE: 1'-0" = 1'-0"

LOCATE TRANSITION STRIP AT ALL FLOOR FINISH TRANSITIONS. SC SHALL FLASH PATCH ALL AREAS RECEIVING CARPET, TILE AND VCT.

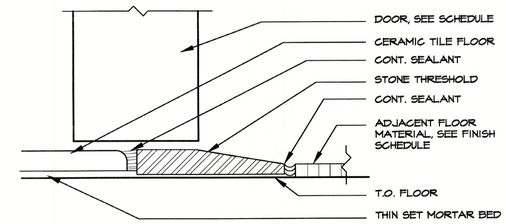

C TILE FLOOR TRANSITION
SCALE: 1'-0" = 1'-0"

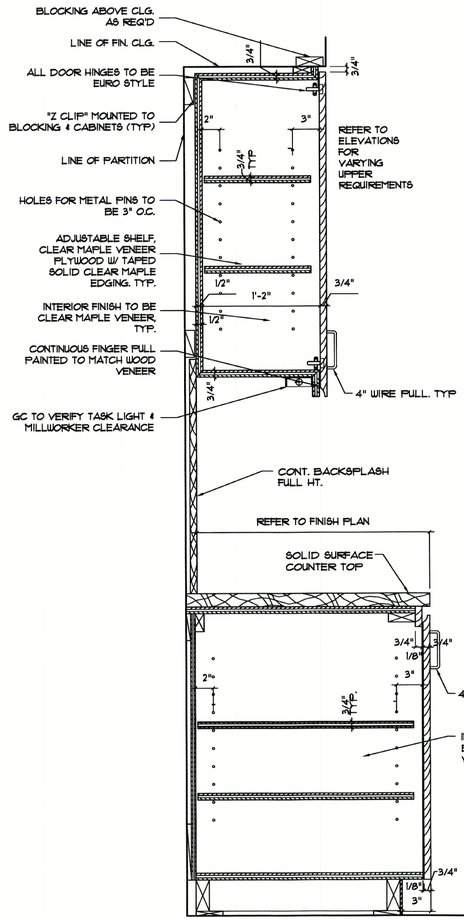

4 TYP. SECTION @ APT. KITCHEN CABINET
SCALE: 1-1/2" = 1'-0"

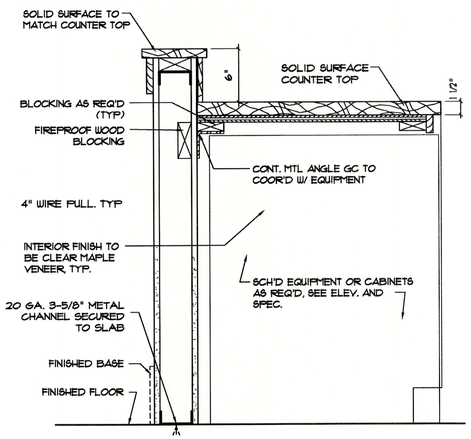

5 TYP. SECTION @ APT. KITCHEN ISLAND
SCALE: 1-1/2" = 1'-0"

LIBERTY PLAZA SUITES
500 COMMERCE STREET HAWTHORNE, NY 10532

ARCHITECT
dimovskiarchitecture
59 Kensico Road, Thornwood, NY 10594
(914) 747-3500 | (914) 747-3588 fax
www.dimovskiarchitecture.com

STRUCTURAL ENGINEER
CHARLES A. MANGANARO
CONSULTING ENGINEERS
A PROFESSIONAL CORPORATION
303 SOUTH BROADWAY, SUITE 223, TARRYTOWN, NY 10591–5488
SHAILESH R. NAIK, P.E.
NEW YORK LICENSE No. 072797-1

MEP ENGINEER
OLA Consulting Engineers
50 Broadway, Hawthorne, NY 10532
914.747.2800
& West 38th Street, Suite 501 New York, NY 10018
646.946.4110
olace.com

NO.	REVISION/ISSUE	DATE
3	ISSUE FOR DOB COMMENT ⚠1	04/26/2021
2	ISSUE FOR PRICING	03/16/2021
1	ISSUE FOR PERMIT	03/12/2021

SEAL
REGISTERED ARCHITECT PAULETTE DIMOVSKI 032760 STATE OF NEW YORK

PROJECT
LIBERTY PLAZA SUITES
500 COMMERCE ST. TOWN OF MT. PLEASANT, NY

DATE:	AUGUST 12, 2020
PROJECT NO:	DA 2034
DRAWN BY:	YK
CHECKED BY:	PD/SGD
SCALE:	AS NOTED

DRAWING TITLE
MISC. DETAILS

SHEET NO.
A-801

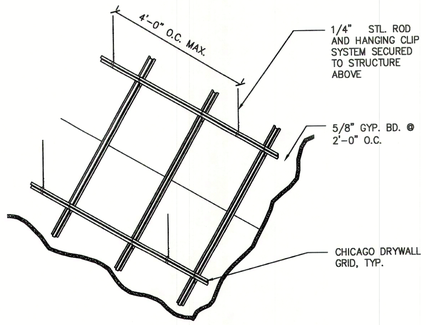

(GWB-1)
1 DETAIL @ GWB CEILING, TYP.
SCALE: N.T.S.

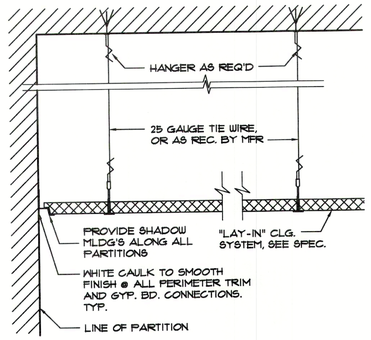

(ACT-1)
2 DETAIL @ SUSPENDED CLG, TYP
SCALE: 3" = 1'-0"

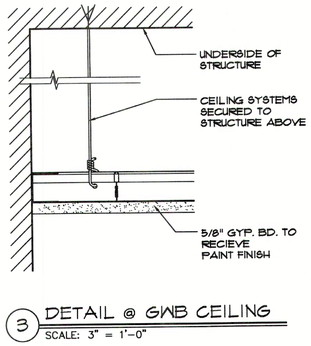

3 DETAIL @ GWB CEILING
SCALE: 3" = 1'-0"

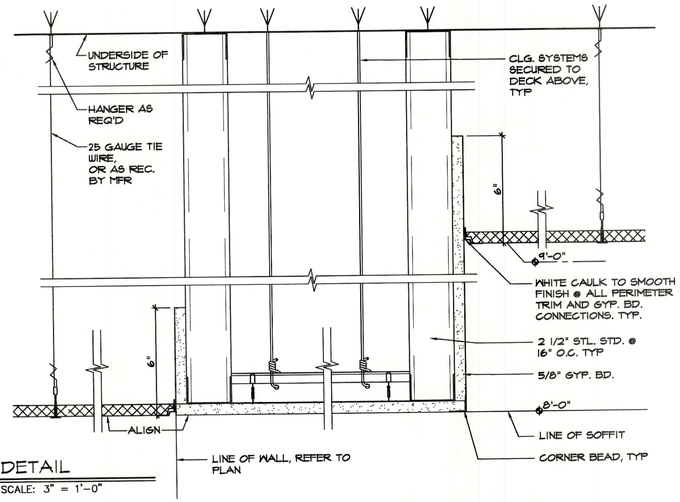

4 DETAIL
SCALE: 3" = 1'-0"

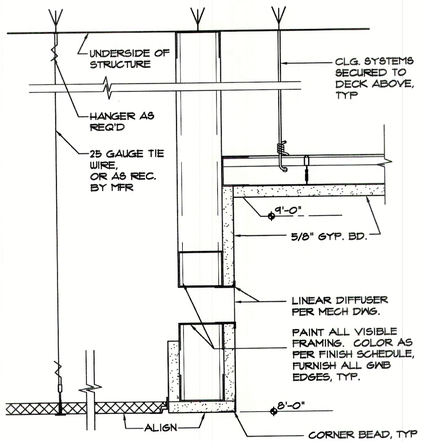

5 DETAIL
SCALE: 3" = 1'-0"

LIBERTY PLAZA SUITES

500 COMMERCE STREET
HAWTHORNE, NY 10532

ARCHITECT
dimovski architecture p.c.
59 Kensico Road, Thornwood, NY 10594
(914) 747-3500 | (914) 747-3588 fax
www.dimovskiarchitecture.com

STRUCTURAL ENGINEER
CHARLES A. MANGANARO
CONSULTING ENGINEERS
A PROFESSIONAL CORPORATION
303 SOUTH BROADWAY, SUITE 223, TARRYTOWN, NY 10591-5488
SHAILESH R. NAIK, P.E.
NEW YORK LICENSE No. 072797-1

MEP ENGINEER
OLA Consulting Engineers
50 Broadway, Hawthorne, NY 10532
914.747.2800
6 West 20th Street, Suite 501, New York, NY 10016
646.846.4110
olace.com

NO.	REVISION/ISSUE	DATE
1	ISSUE FOR PERMIT	03/12/2021

SEAL
REGISTERED ARCHITECT PAULETTE DIMOVSKI 033161 STATE OF NEW YORK

PROJECT
LIBERTY PLAZA SUITES
500 COMMERCE ST.
TOWN OF MT. PLEASANT, NY

DATE:	AUGUST 12, 2020
PROJECT NO:	DA 2034
DRAWN BY:	YK
CHECKED BY:	PD/SGD
SCALE:	AS NOTED

DRAWING TITLE
RCP DETAILS

SHEET NO.
A-802

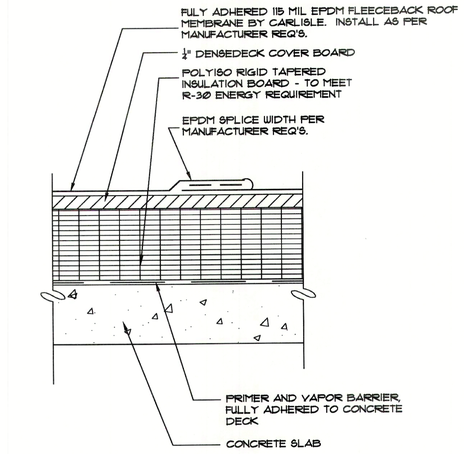

1 TYPICAL NEW ROOF ASSSEMBLY
SCALE: 3" = 1'-0"

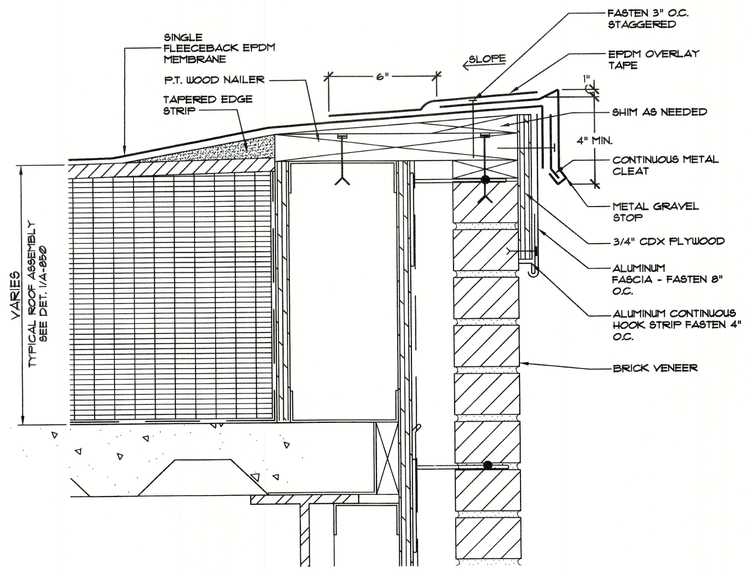

2 EDGE DETAIL
SCALE: 3" = 1'-0"

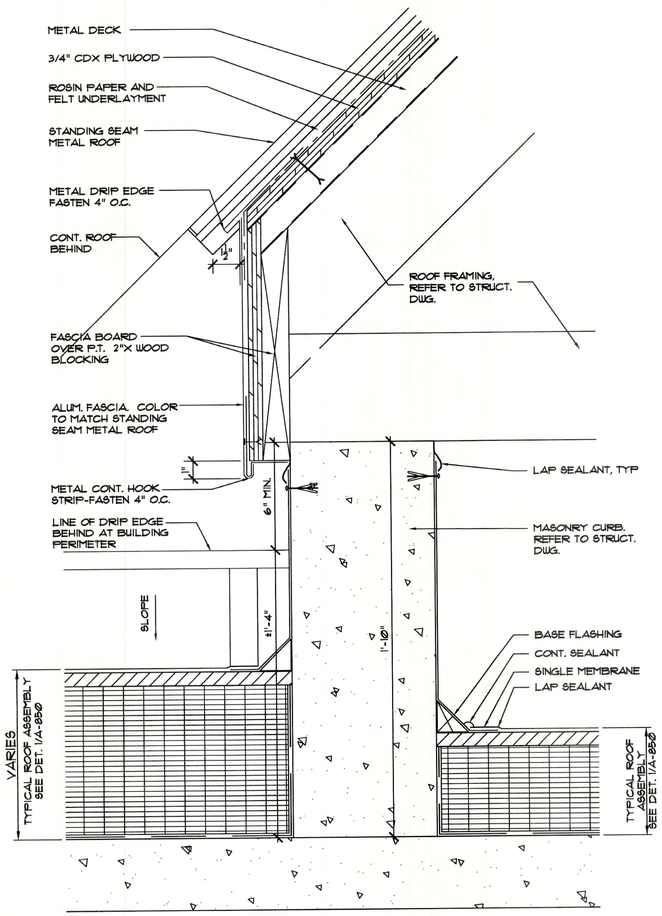

5 EAVE DETAIL
SCALE: 3" = 1'-0"

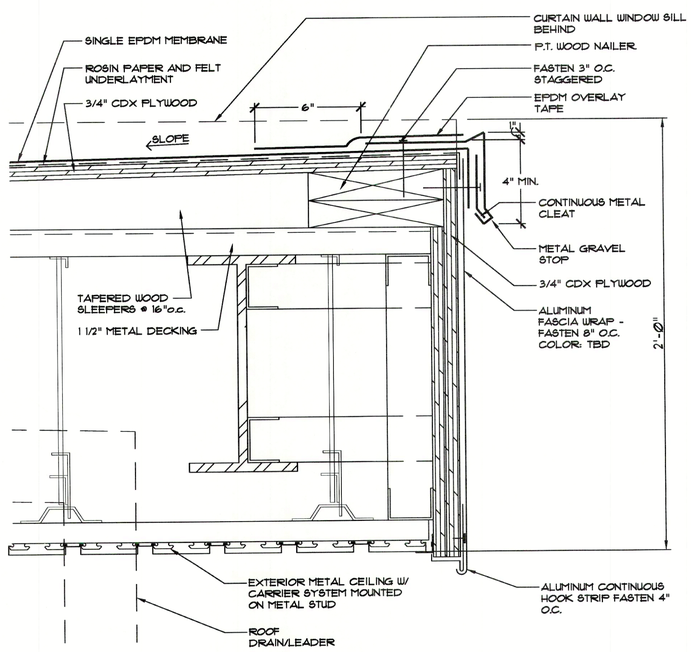

3 RIDGE DETAIL
SCALE: 3" = 1'-0"

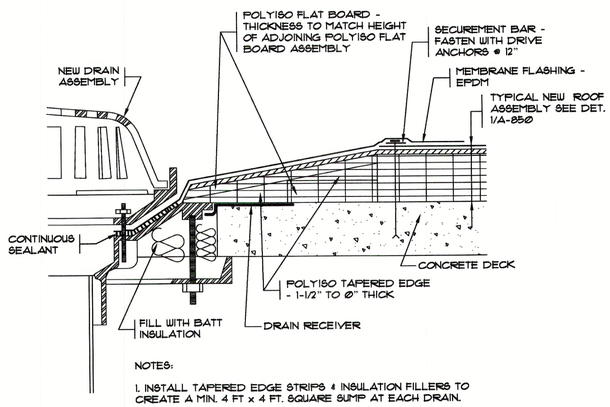

NOTES:

1. INSTALL TAPERED EDGE STRIPS & INSULATION FILLERS TO CREATE A MIN. 4 FT x 4 FT. SQUARE SUMP AT EACH DRAIN.

2. INSULATE THE DRAIN BOWL AND NEW PIPE.

4 ROOF DRAIN DETAIL
SCALE: 3" = 1'-0"

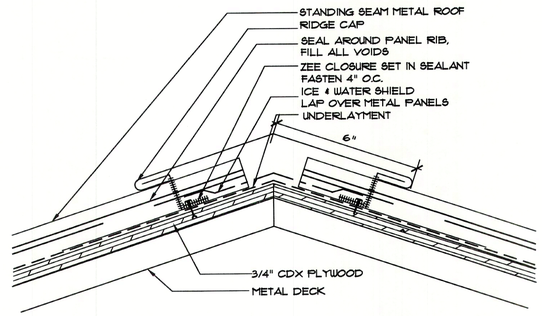

6 RIDGE DETAIL
SCALE: 3" = 1'-0"

LIBERTY PLAZA SUITES

500 COMMERCE STREET
HAWTHORNE, NY 10532

ARCHITECT
dimovski architecture p.c.
59 Kensico Road, Thornwood, NY 10594
(914) 747-3500 | (914) 747-3588 fax
www.dimovskiarchitecture.com

STRUCTURAL ENGINEER
CHARLES A. MANGANARO CONSULTING ENGINEERS
A PROFESSIONAL CORPORATION
303 SOUTH BROADWAY, SUITE 223, TARRYTOWN, NY 10591-5488
SHAILESH R. NAIK, P.E.
NEW YORK LICENSE No. 072797-1

MEP ENGINEER
CLA Consulting Engineers
50 Broadway, Hawthorne, NY 10532
914.747.2800
8 West 38th Street, Suite 301 New York, NY 10018
646.846.4110
clace.com

NO.	REVISION/ISSUE	DATE
1	ISSUE FOR PERMIT	03/12/2021

SEAL
REGISTERED ARCHITECT PAULETTE DIMOVSKI 032361 STATE OF NEW YORK

PROJECT
LIBERTY PLAZA SUITES
500 COMMERCE ST.
TOWN OF MT. PLEASANT, NY

DATE:	AUGUST 12, 2020
PROJECT NO:	DA 2034
DRAWN BY:	YK
CHECKED BY:	PD/SGD
SCALE:	AS NOTED

DRAWING TITLE
ROOF DETAILS

SHEET NO.
A-850

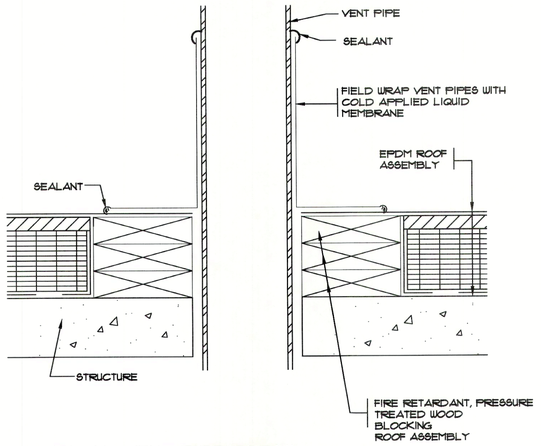

7 TYPICAL VENT PIPE DETAIL
SCALE: 3" = =1'-0"

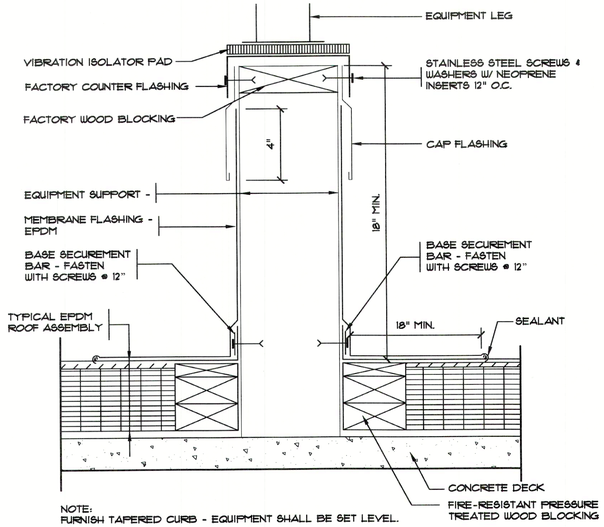

NOTE:
FURNISH TAPERED CURB - EQUIPMENT SHALL BE SET LEVEL.

8 MECHANICAL EQUIPMENT CURB
SCALE: 3" = =1'-0"

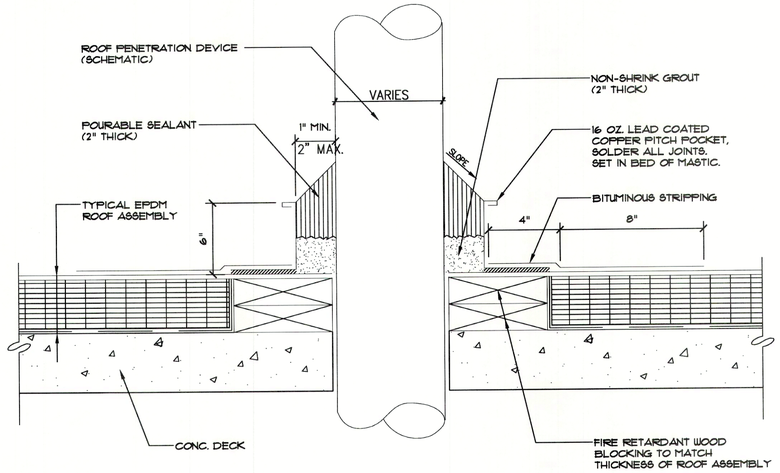

9 DETAIL @ PITCH POCKET
SCALE: 3" = =1'-0"

10 TYPICAL VENT PIPE DETAIL
SCALE: 3" = =1'-0"

11 EAVE DETAIL
SCALE: 3" = =1'-0"

LIBERTY PLAZA SUITES

500 COMMERCE STREET
HAWTHORNE, NY 10532

ARCHITECT
dimovski architecture p.c.
59 Kensico Road, Thornwood, NY 10594
(914) 747-3500 | (914) 747-3588 fax
www.dimovskiarchitecture.com

STRUCTURAL ENGINEER
CHARLES A. MANGANARO
CONSULTING ENGINEERS
A PROFESSIONAL CORPORATION
303 SOUTH BROADWAY, SUITE 223, TARRYTOWN, NY 10591-5488
SHAILESH R. NAIK, P.E.
NEW YORK LICENSE No. 072797-1

MEP ENGINEER
CLA Consulting Engineers
50 Broadway,
Hawthorne, NY 10532
914.747.2800
&
5 West 30th Street,
Suite 501
New York, NY 10018
646.646.4110
clace.com

NO.	REVISION/ISSUE	DATE
1	ISSUE FOR PERMIT	03/12/2021

SEAL
REGISTERED ARCHITECT PAULETTE DIMOVSKI 032561 STATE OF NEW YORK

PROJECT
LIBERTY PLAZA SUITES
500 COMMERCE ST.
TOWN OF MT. PLEASANT, NY

DATE:	AUGUST 12, 2020
PROJECT NO:	DA 2034
DRAWN BY:	YK
CHECKED BY:	PD/SGD
SCALE:	AS NOTED

DRAWING TITLE
ROOF DETAILS

SHEET NO.
A-851

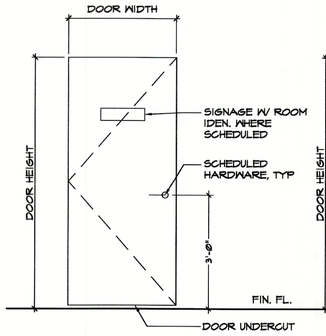

DOOR TYPE A

FLUSH DOOR SOLID CORE WOOD / OR HOLLOW METAL AS SCHEDULED.

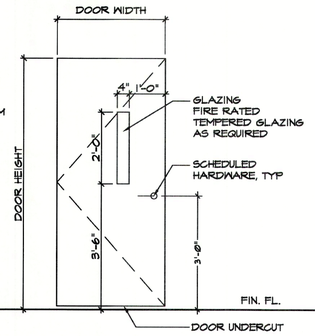

DOOR TYPE B

FLUSH DOOR SOLID CORE HOLLOW METAL AS SCHEDULED.

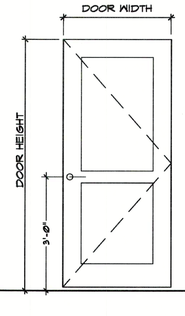

DOOR TYPE C

MFR

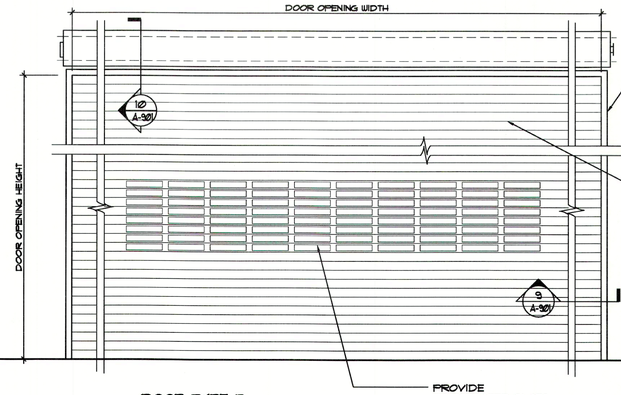

DOOR TYPE D

RATED DOOR - UL 325

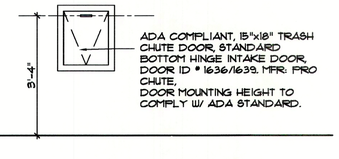

DOOR TYPE E

60 MIN RATED DOOR (1-1/2 HOUR UL RATED BY DESIGN ONLY)

DOOR ELEVATIONS

1/2"=1'-0"

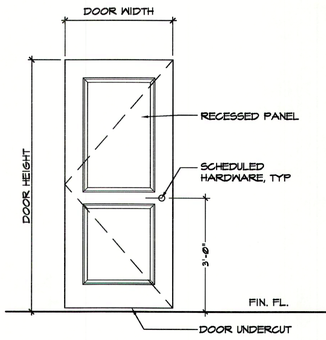

DOOR TYPE F

SOLID CORE WOOD / OR HOLLOW METAL AS SCHEDULED.

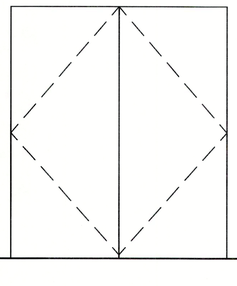

DOOR TYPE G

DUMPSTER GATE, BASTEEL PERIMETER SYSTEM BY FEERLESS FENCE GROUP OR APPROVED EQUAL

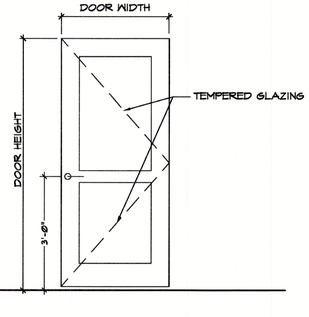

DOOR TYPE H

FLUSH DOOR SOLID CORE HOLLOW METAL AS SCHEDULED.

DOOR ELEVATIONS

1/2"=1'-0"

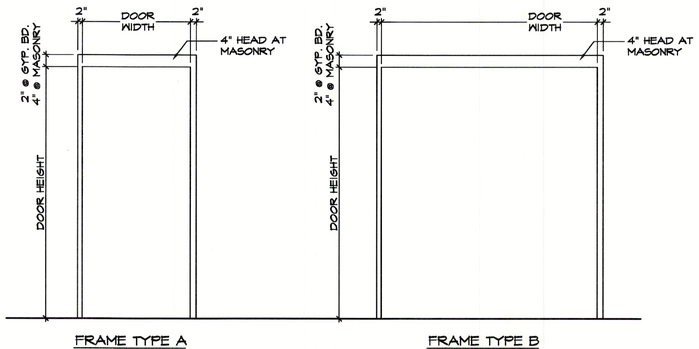

FRAME TYPE A

SINGLE DOOR

FRAME TYPE B

DOUBLE DOOR

FRAME ELEVATIONS

1/2"=1'-0"

DOOR SCHEDULE GENERAL NOTES:

A. ALL EXIT DOORS TO BE OPENABLE FROM THE INSIDE WITHOUT THE USE OF A KEY, SPECIAL KNOWLEDGE OR EFFORT, LOCKING DEVICE TO MEET LOCAL JURISDICTION CURRENT ADOPTED CODE REQUIREMENTS.
B. ALL THRESHOLDS SHALL BE NO HIGHER THAN 1/2" AND BEVELED AT THE EDGES WITH THE SLOPE BEING NO GREATER THAN 1:2.
C. CONTRACTOR TO VERIFY ALL DIMENSIONS PRIOR TO ORDERING MATERIALS OR STARTING WORK AND REPORT ANY DISCREPANCIES TO ARCHITECT.
D. COORDINATE WITH MECH. DWGS. FOR DOOR UNDERCUT, TYP.
E. PREP DOORS FOR CONCEALED CLOSERS / HARDWARE AS SCHEDULED (WHERE OCCURS)
F. ALL DOORS IN FIRE RESISTANCE RATED CORRIDORS SHALL BE TESTED IN ACCORDANCE W/ NFPA 252 OR UL 10C WITHOUT THE HOSE STREAM TEST.
G. ALL DOORS IN FIRE RESISTANCE RATED CORRIDORS SHALL MEET THE REQUIREMENTS FOR SMOKE AND DRAFT CONTROL DOOR ASSEMBLIES, TESTED FOR AIR LEAKAGE IN ACCORDANCE W/ UL 1784, AND INSTALLED IN ACCORDANCE W/ NFPA 105.

HARDWARE NOTES

HINGE	STANLEY	5/5 BB. NRP 4 1/2 x 4 1/2 3 KNUCKLE
LOCKSET	SCHLAGE	ND SERIES
LEVER HANDLES:	SCHLAGE	ND ATHENS
EXIT DEVICE	VON DUPRIN	98/99 SERIES
SURFACE CLOSER	LCN	SURFACE MOUNTED
STOREFRONT CLOSER	BY STOREFRONT MANUFACTURER	
SET GASKETING	PEMKO	
DOOR STOP	IVES	WALL/OR FLOOR VERIFY EACH
SILENCER	IVES	ONE SET SILENCERS

HARDWARE SET

1. HARDWARE / KEYING: COORDINATE OWNER'S KEYING/CARD READER REQUIREMENTS.
2. VERIFY ALL HARDWARE TYPES AND FINISHES WITH OWNER PRIOR TO START OR ORDER.
3. COORDINATE ALL DOOR FUNCTIONS & KEYING/CARD READER WITH OWNER PRIOR OR START OR ORDER.
4. COORDINATE ALL SECURITY DEVICES WITH ELECTRICAL CONTRACTOR AND OWNER.
5. HARDWARE FINISH TO BE SATIN NICKEL U.N.O. TYP (VERIFY W/ OWNER).
6. CONTRACTOR SHALL SUBMIT DOOR FRAME AND HARDWARE SHOP DRAWINGS FOR REVIEW AND APPROVAL PRIOR TO FABRICATION.
7. ALL CLOSER SHALL BE INSIDE MOUNTED.

H1 - SINGLE - KEY LOCK - UTILITY

HINGE	1 1/2 PAIR HINGES - BB - NRP
LOCKSET	ONE SET LEVER STOREROOM LOCK. FULLY MORTISED. COORDINATE W/ OWNER FOR KEYED LOCK/CARD READER. INSIDE FREE FOR IMMEDIATE EXIT
CLOSER	ONE CLOSER
STOP	ONE STOP FLOOR/ OR WALL, VIF
SILENCER	ONE SET SILENCERS
DOOR SIGN	ONE DOOR SIGN

H2 - EXTERIOR EXIT - SINGLE

HINGE	1 1/2 PAIR HINGES - BB- NRP
LOCKSET	ONE SET LEVER EXIT LOCK - FULLY MORTISED. COORDINATE W/ OWNER FOR KEYED LOCK/CARD READER.
EXIT DEVICE	ONE PANIC EXIT DEVICE
CLOSER	ONE CLOSER
THRESHOLD	ONE EXTERIOR ALUMINUM THRESHOLD
WEATHER STRIPPING	ONE SET WEATHER STRIPPING ALL AROUND & ONE BOTTOM WEATHER STRIPPING
SEAL	ONE SET SEALS
SILENCER	ONE SET SILENCERS

H3 - PASSAGE - EXIT

HINGE	1 1/2 PAIR HINGES - BB - NRP
LOCKSET	ONE SET LEVER PASSAGE LATCH - FULLY MORTISED.
EXIT DEVICE	ONE PANIC EXIT DEVICE
CLOSER	ONE CLOSER
STOP	ONE STOP FLOOR/ OR WALL, VIF
SILENCER	ONE SET SILENCERS
DOOR SIGN	ONE DOOR SIGN

H4 - STOREFRONT DOOR - DOUBLE

EFCO
BULK OF HARDWARE PROVIDED BY MANUFACTURER. COORDINATE WITH OWNER FOR KEYED LOCKED/CARD READER.

EXIT DEVICE	ONE PANIC EXIT DEVICE PER DOOR LEAF
THRESHOLD	ONE EXTERIOR ALUMINUM THRESHOLD

H5 - PASSAGE - GARBAGE

HINGE	1 1/2 PAIR HINGES - BB
LOCKSET	ONE SET LEVER PASSAGE LATCH INSIDE FREE FOR IMMEDIATE EXIT
CLOSER	ONE CLOSER
STOP	ONE STOP FLOOR/ OR WALL, VIF
SILENCER	ONE SET SILENCERS
DOOR SIGN	ONE DOOR SIGN

H6 - GARBAGE CHUTE

PRO CHUTE
BULK OF HARDWARE PROVIDED BY MANUFACTURER.

H7 - SINGLE - MAIL ROOM, GYM

HINGE	1 1/2 PAIR HINGES - BB
LOCKSET	ONE SET LEVER CLASSROOM LOCK. FULLY MORTISED. COORDINATE W/ OWNER FOR KEYED LOCK. INSIDE FREE FOR IMMEDIATE EXIT
CLOSER	ONE CLOSER
STOP	ONE STOP FLOOR/ OR WALL, VIF
SILENCER	ONE SET SILENCERS
DOOR SIGN	ONE DOOR SIGN

H8 - SINGLE - APT. ENTRANCE

HINGE	1 1/2 PAIR HINGES - BB - NRP
LOCKSET	ONE SET LEVER ENTRANCE LOCK. FULLY MORTISED. COORDINATE W/ OWNER FOR KEYED LOCK/CARD READER. INSIDE FREE FOR IMMEDIATE EXIT
CLOSER	ONE CLOSER
THRESHOLD	ONE ALUMINUM THRESHOLD
STOP	ONE STOP FLOOR/ OR WALL, VIF
SILENCER	ONE SET SILENCERS
DOOR SIGN	ONE DOOR SIGN

H9 - APT. BATHROOM, BEDROOM

HINGE	1 1/2 PAIR HINGES
LOCKSET	ONE SET LEVER BATH/BEDROOM PRIVACY LOCK. INSIDE FREE FOR IMMEDIATE EXIT
STOP	ONE STOP FLOOR/ OR WALL, VIF
SILENCER	ONE SET SILENCERS

H10 - APT. W.I.C.

HINGE	1 1/2 PAIR HINGES
LOCKSET	ONE SET LEVER PASSAGE LATCH INSIDE FREE FOR IMMEDIATE EXIT
STOP	ONE STOP FLOOR/ OR WALL, VIF
SILENCER	ONE SET SILENCERS

H11 - APT. CLOSET

HINGE	1 1/2 PAIR HINGES
LOCKSET	ONE SET LEVER SINGLE DUMMY TRIM
STOP	ONE STOP FLOOR/ OR WALL, VIF
SILENCER	ONE SET SILENCERS

H12 - APT. CLOSET - DOUBLE DOOR

HINGE	1 1/2 PAIR HINGES PER LEAF
LOCKSET	TWO SET LEVER SINGLE DUMMY TRIM
ASTRAGAL & COORDINATOR	ONE SET
STOP	TWO STOP FLOOR/ OR WALL, VIF
SILENCER	TWO SET SILENCERS

H13 - ROLL UP DOOR

OVERHEAD COILING /ROLL-UP DOOR

PROVIDE ELECTRICALLY MOTORIZED HOIST AT COILING DOOR.

COORDINATE W/ OWNER FOR KEYED LOCK/CARD READER.

H14 - SINGLE - ROOF STAIR

HINGE	1 1/2 PAIR HINGES - BB - NRP
LOCKSET	ONE SET LEVER CLASSROOM LOCK. FULLY MORTISED. COORDINATE W/ OWNER FOR KEYED LOCK/CARD READER. INSIDE FREE FOR IMMEDIATE EXIT
CLOSER	ONE CLOSER
THRESHOLD	ONE EXTERIOR ALUMINUM THRESHOLD
WEATHER STRIPPING	ONE SET WEATHER STRIPPING ALL AROUND & ONE BOTTOM WEATHER STRIPPING
STOP	ONE STOP FLOOR/ OR WALL, VIF
SILENCER	ONE SET SILENCERS

H15 - DUMPSTER GATE

BULK OF HARDWARE PROVIDED BY MANUFACTURER.

H16 - DOUBLE

HINGE	1 1/2 PAIR HINGES PER DOOR - BB - NRP
LOCKSET	ONE SET LEVER PER DOOR. FULLY MORTISED. COORDINATE W/ OWNER FOR KEYED LOCK/CARD READER. INSIDE FREE FOR IMMEDIATE EXIT
EXIT DEVICE	ONE PANIC EXIT DEVICE
BOLT	ROCKWOOD AUTOMATED FLUSH BOLT
CLOSER	ONE CLOSER PER DOOR
THRESHOLD	ONE EXTERIOR ALUMINUM THRESHOLD
STOP	ONE STOP PER DOOR, FLOOR/OR WALL, VIF
SILENCER	ONE SET SILENCERS PER DOOR

LIBERTY PLAZA SUITES

500 COMMERCE STREET
HAWTHORNE, NY 10532

ARCHITECT

dimovski architecture pllc
59 Kensico Road, Thornwood, NY 10594
(914) 747-3500 | (914) 747-3588 fax
www.dimovskiarchitecture.com

STRUCTURAL ENGINEER

CHARLES A. MANGANARO CONSULTING ENGINEERS
A PROFESSIONAL CORPORATION
303 SOUTH BROADWAY, SUITE 223, TARRYTOWN, NY 10591-5488
SHAILESH R. NAIK, P.E.
NEW YORK LICENSE No. 072797-1

MEP ENGINEER

CLA Consulting Engineers
50 Broadway,
Hawthorne, NY 10532
914.747.2800
2 West 38th Street,
Suite 501
New York, NY 10018
646.646.4110
clase.com

NO.	REVISION/ISSUE	DATE
3	ISSUE FOR DOB COMMENT 1	04/26/2021
2	ISSUE FOR PRICING	03/16/2021
1	ISSUE FOR PERMIT	03/12/2021

SEAL

REGISTERED ARCHITECT PAULETTE DIMOVSKI 032361 STATE OF NEW YORK

PROJECT

LIBERTY PLAZA SUITES
500 COMMERCE ST.
TOWN OF MT. PLEASANT, NY

DATE:	AUGUST 12, 2020
PROJECT NO:	DA 2034
DRAWN BY:	YK
CHECKED BY:	PD/SGD
SCALE:	AS NOTED

DRAWING TITLE

DOOR SCHEDULE

SHEET NO.

A-900

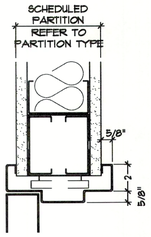

1 DETAIL @ HEAD
SCALE: 3" = 1'-0"

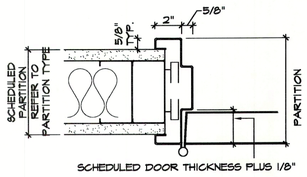

2 DETAIL @ JAMB
SCALE: 3" = 1'-0"

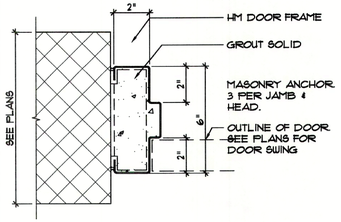

3 DETAIL @ HM DOOR JAMB
SCALE: 3" = 1'-0"

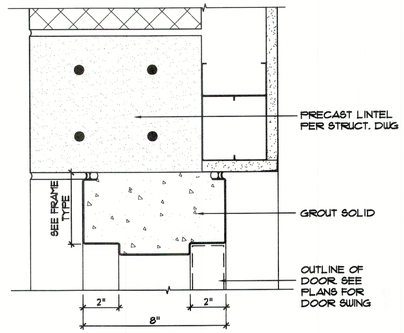

4 DETAIL @ HM DOOR HEAD
SCALE: 3" = 1'-0"

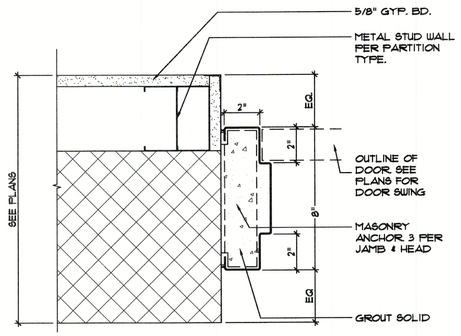

5 DETAIL @ HM DOOR JAMB
SCALE: 3" = 1'-0"

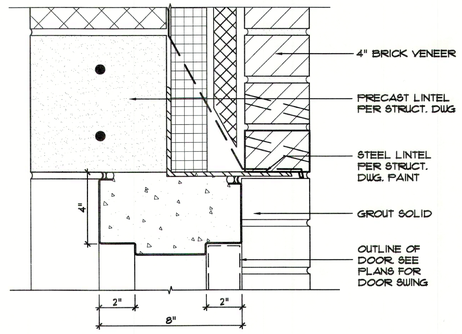

6 DETAIL @ EXTERIOR HM DOOR HEAD
SCALE: 3" = 1'-0"

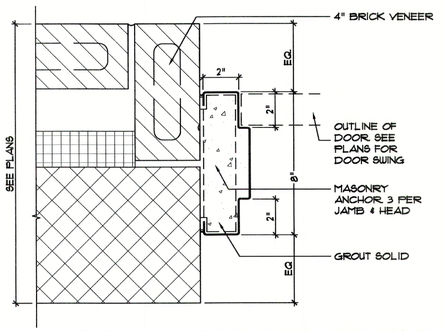

7 DETAIL @ EXTERIOR HM DOOR JAMB
SCALE: 3" = 1'-0"

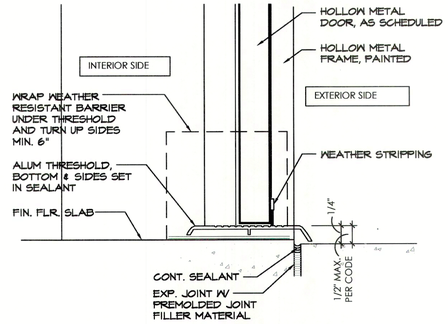

8 DETAIL @ EXTERIOR HM DOOR SILL
SCALE: 3" = 1'-0"

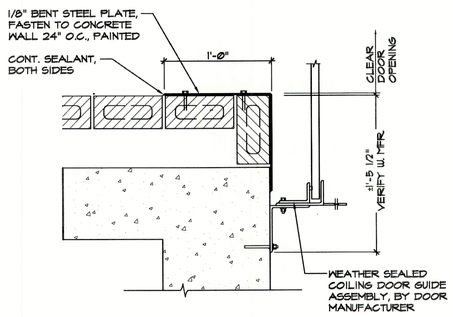

9 OVERHEAD COILING DOOR JAMB
SCALE: 1 1/2" = 1'-0"

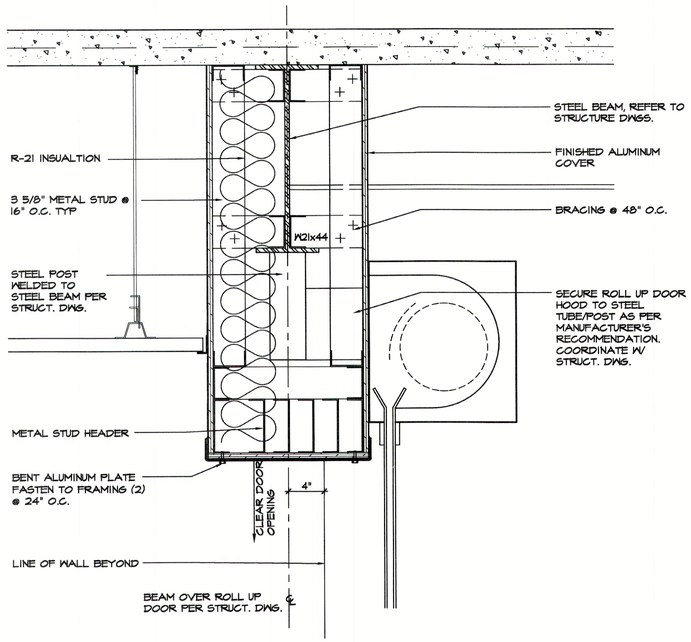

10 OVERHEAD COILING DOOR HEAD
SCALE: 1 1/2" = 1'-0"

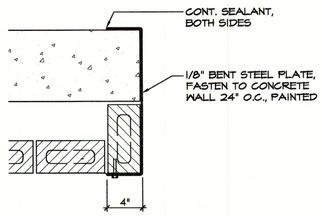

11 JAMB AT DUMBSTER DOOR
SCALE: 1 1/2" = 1'-0"

LIBERTY PLAZA SUITES

500 COMMERCE STREET
HAWTHORNE, NY 10532

ARCHITECT

dimovski architecture PLLC
59 Kensico Road, Thornwood, NY 10594
(914) 747-3500 | (914) 747-3588 fax
www.dimovskiarchitecture.com

STRUCTURAL ENGINEER

CHARLES A. MANGANARO
CONSULTING ENGINEERS
A PROFESSIONAL CORPORATION
303 SOUTH BROADWAY, SUITE 223, TARRYTOWN, NY 10591-5488
SHAILESH R. NAIK, P.E.
NEW YORK LICENSE No. 072797-1

MEP ENGINEER

OLA Consulting Engineers
50 Broadway, Hawthorne, NY 10532
914.747.2800
8 West 38th Street, Suite 901
New York, NY 10018
646.848.4110
olaae.com

NO.	REVISION/ISSUE	DATE
1	ISSUE FOR PERMIT	03/12/2021

SEAL

REGISTERED ARCHITECT PAULETTE DIMOVSKI 032361 STATE OF NEW YORK

PROJECT

LIBERTY PLAZA SUITES
500 COMMERCE ST.
TOWN OF MT. PLEASANT, NY

DATE:	AUGUST 12, 2020
PROJECT NO:	DA 2034
DRAWN BY:	YK
CHECKED BY:	PD/SGD
SCALE:	AS NOTED

DRAWING TITLE

DOOR DETAILS

SHEET NO.

A-901

WINDOW SCHEDULE

WINDOW ID.	DESCRIPTION	M.O./R.O. WIDTH	x	HEIGHT	TYPE	HEAD	JAMB	SILL	GLAZING	FIRE RATING MINUTE	REMARKS
W1	ALUM. STOREFRONT	6'-0"	x	5'-8"	-	-	-	-	1" INSULATED TEMPERED	-	MFR: EFCO SERIES 325X
W2	ALUM. STOREFRONT	5'-4"	x	5'-4"	-	-	-	-	1" INSULATED TEMPERED	-	MFR: EFCO SERIES 325X
W3	ALUM. STOREFRONT	5'-4"	x	5'-4"	-	-	-	-	1" INSULATED TEMPERED	-	MFR: EFCO SERIES 325X
W4	ALUM. STOREFRONT	2'-8"	x	5'-4"	-	-	-	-	1" INSULATED TEMPERED	-	MFR: EFCO SERIES 325X ⚠1
W5	ALUM. CURTAIN WALL	17'-10"	x	21'-8"	-	-	-	-	1" INSULATED TEMPERED	-	MFR: EFCO 5600 W/ DURACAST PRESSURE PLATE
W6	ALUM. CURTAIN WALL	24'-6"	x	21'-8"	-	-	-	-	1" INSULATED TEMPERED	-	MFR: EFCO 5600 W/ DURACAST PRESSURE PLATE
W7	ALUM. CURTAIN WALL	6'-8"	x	21'-8"	-	-	-	-	1" INSULATED TEMPERED	-	MFR: EFCO 5600 W/ DURACAST PRESSURE PLATE
W8	ALUM. CURTAIN WALL	15'-0"	x	9'-0"	-	-	-	-	1" INSULATED TEMPERED	-	MFR: EFCO 5600 W/ DURACAST PRESSURE PLATE AND D202
W9	ALUM. CURTAIN WALL	10'-8"	x	15'-0"	-	-	-	-	1" INSULATED TEMPERED	-	MFR: EFCO 5600 W/ DURACAST PRESSURE PLATE
W10	ALUM. CURTAIN WALL	6'-4"	x	9'-0"	-	-	-	-	1" INSULATED TEMPERED	-	MFR: EFCO 5600 W/ DURACAST PRESSURE PLATE AND D202
~~W11~~	~~ALUM. CURTAIN WALL~~	~~6'-4"~~	~~x~~	~~7'-2"~~					~~1" INSULATED TEMPERED~~	~~45 MIN.~~	~~MFR: EFCO~~ OMIT ⚠1

WINDOW ELEVATIONS

SCALE: 1/4"=1'-0"

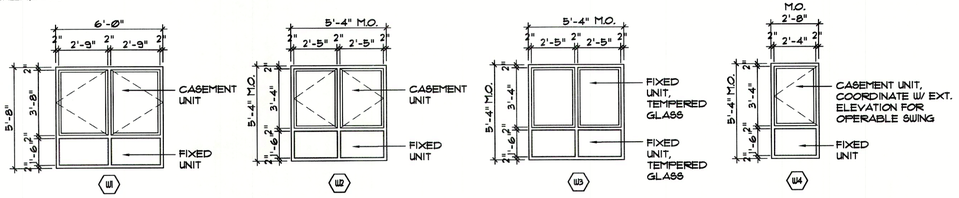

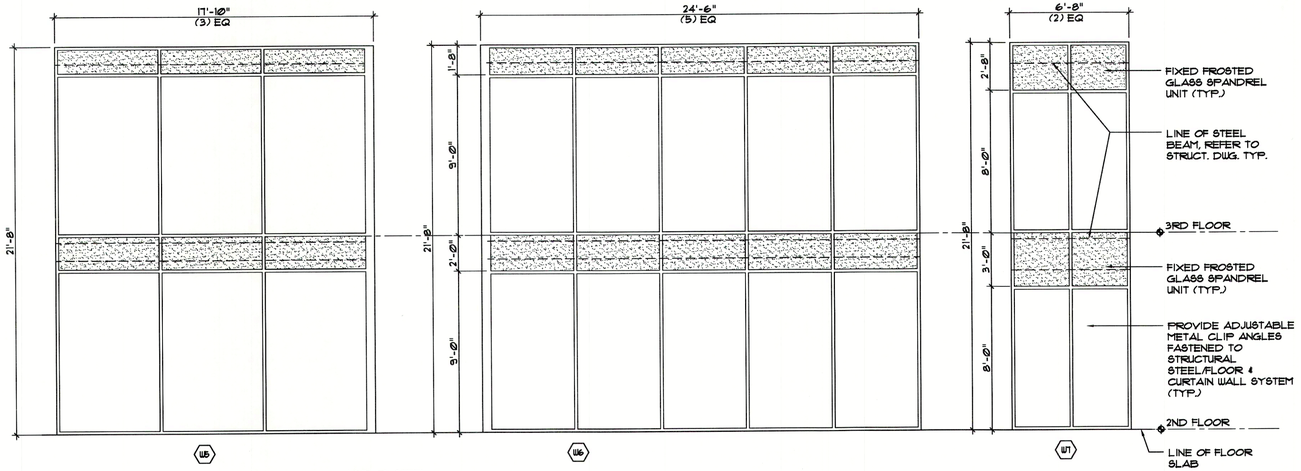

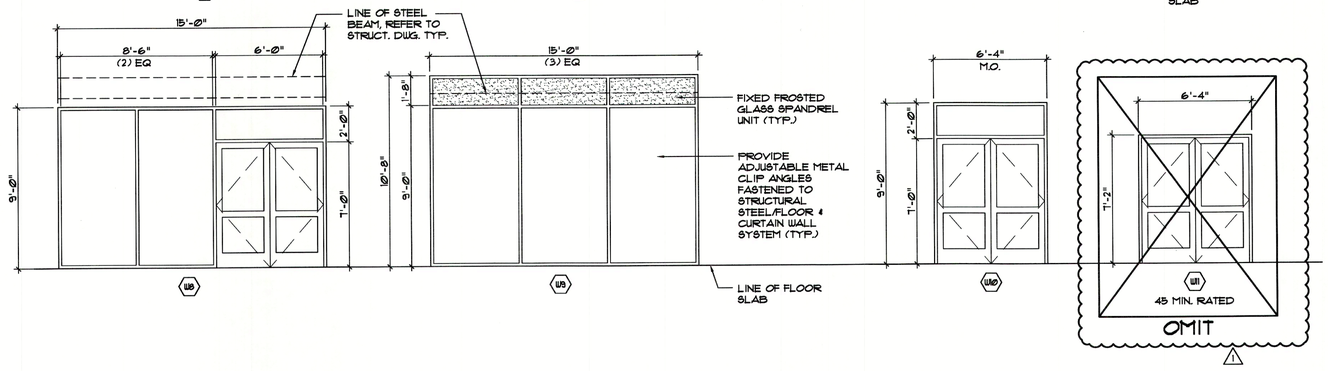

STOREFRONT DETAILS

SCALE: 3"=1'-0"

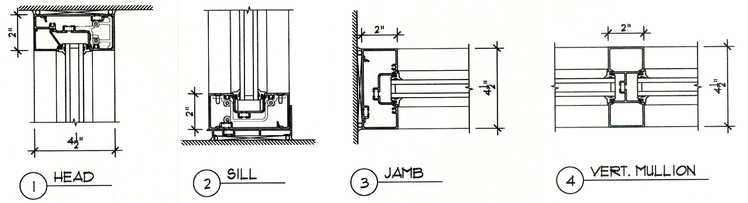

CURTAIN WALL WINDOW DETAILS

SCALE: 3"=1'-0"

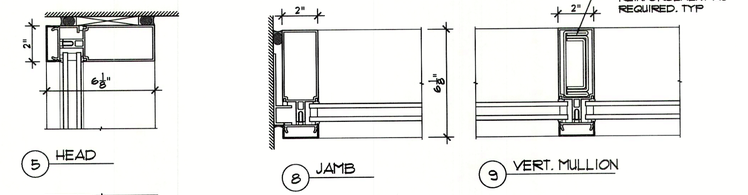

ENTRANCE DOOR

SCALE: 3"=1'-0"

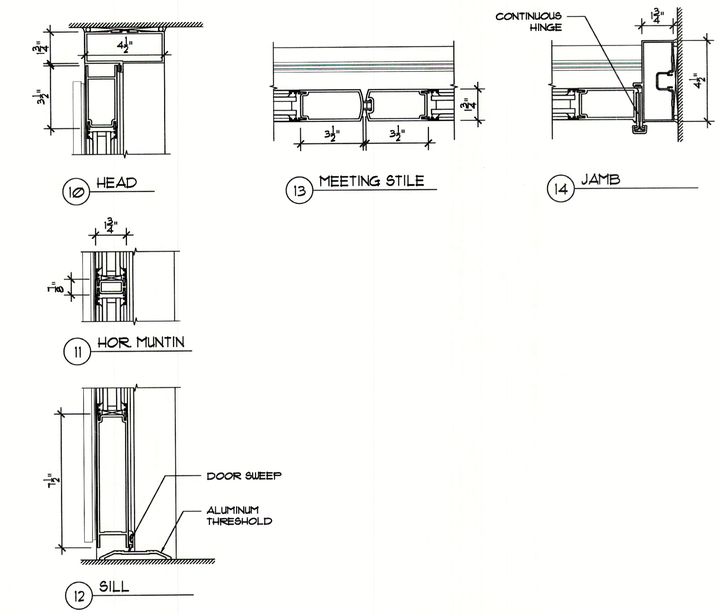

LIBERTY PLAZA SUITES

500 COMMERCE STREET
HAWTHORNE, NY 10532

ARCHITECT

dimovski architecture
59 Kensico Road, Thornwood, NY 10594
(914) 747-3500 | (914) 747-3588 fax
www.dimovskiarchitecture.com

STRUCTURAL ENGINEER

CHARLES A. MANGANARO
CONSULTING ENGINEERS
A PROFESSIONAL CORPORATION
303 SOUTH BROADWAY, SUITE 223, TARRYTOWN, NY 10591-5488

SHAILESH R. NAIK, P.E.
NEW YORK LICENSE No. 072797-1

MEP ENGINEER

OLA Consulting Engineers
50 Broadway
Hawthorne, NY 10532
914.747.2800
8 West 38th Street,
Suite 901
New York, NY 10018
646.848.4110
olace.com

NO.	REVISION/ISSUE	DATE
3	ISSUE FOR DOB COMMENT ⚠1	04/26/2021
2	ISSUE FOR PRICING	03/16/2021
1	ISSUE FOR PERMIT	03/12/2021

SEAL

REGISTERED ARCHITECT
PAULETTE DIMOVSKI
032520
STATE OF NEW YORK

PROJECT

LIBERTY PLAZA SUITES
500 COMMERCE ST.
TOWN OF MT. PLEASANT, NY

DATE:	AUGUST 12, 2020
PROJECT NO:	DA 2034
DRAWN BY:	YK
CHECKED BY:	PD/SGD
SCALE:	AS NOTED

DRAWING TITLE

WINDOW SCHEDULES AND DETAILS

SHEET NO.

A-910

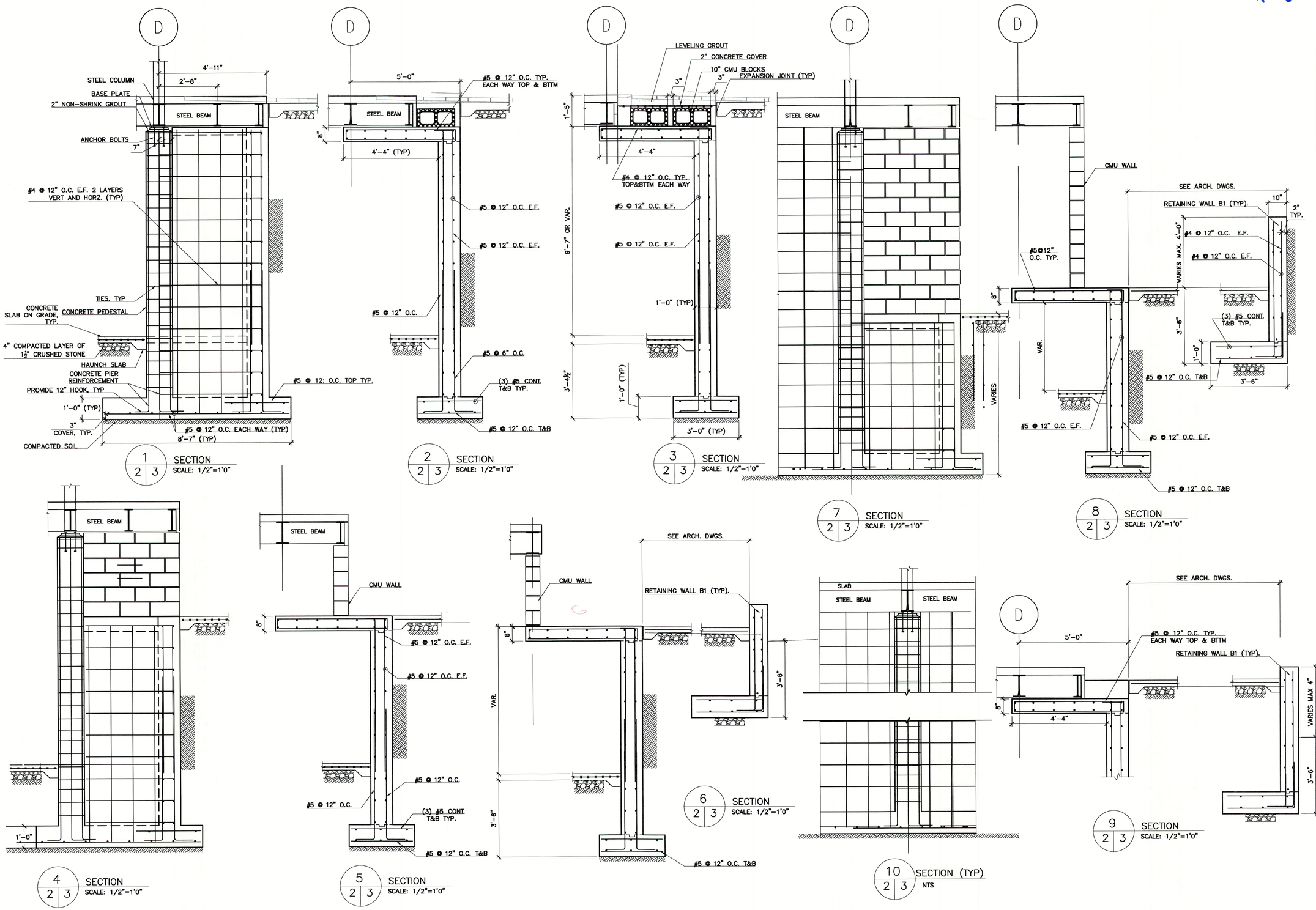

LIBERTY PLAZA SUITES

500 COMMERCE STREET
HAWTHORNE, NY 10532

ARCHITECT

dimovski architecture PLLC
59 Kensico Road, Thornwood, NY 10594
(914) 747-3500 | (914) 747-3588 fax
www.dimovskiarchitecture.com

STRUCTURAL ENGINEER

CHARLES A. MANGANARO CONSULTING ENGINEERS
A PROFESSIONAL CORPORATION
303 SOUTH BROADWAY, SUITE 223, TARRYTOWN, NY 10591-5488
SHAILESH R. NAIK, P.E.
NEW YORK LICENSE No. 072797-1

MEP ENGINEER

NO.	REVISION/ISSUE	DATE
2	ISSUE FOR DOB COMMENT	04/26/2021
1	ISSUE FOR PERMIT	03/12/2021

SEAL

STATE OF NEW YORK · SHAILESH RAMESH NAIK · 072797 · LICENSED PROFESSIONAL ENGINEER

PROJECT

LIBERTY PLAZA SUITES
500 COMMERCE ST.
TOWN OF MT. PLEASANT, NY

DATE:	APRIL 26, 2021
PROJECT NO:	1941
DRAWN BY:	MU
CHECKED BY:	MR
SCALE:	AS NOTED

DRAWING TITLE

STRUCTURAL RETAINING WALL SECTIONS

SHEET NO.

S-003

SPLICE LENGTH TABLE	
BAR SIZE	MIN. SPLICE
#3	1'-3"
#4	1'-8"
#5	2'-1"
#6	2'-6"
#7	3'-6"
#8	4'-0"

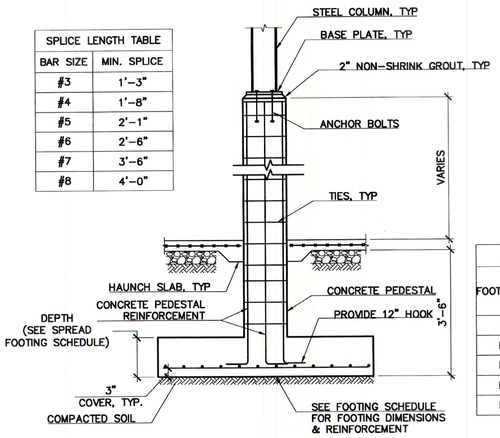

FOOTING DETAIL
NTS

PEDESTAL SCHEDULE		
TYPE	P1	P2
FOUNDATION.	F1&F2	F3,F4 & F5
COLUMN SIZE	21"X21"	18"X18"
VERTICALS	12#7	8#5
TIES	#3 @11"	#3 @7"
LAP ABOVE	4'-0"	4'-0"

FOOTING SCHEDULE				
FOOTING ID	FOOTING SIZE		FOOTING THICKNESS	STEEL REINFORCEMENT
	LENGTH	BREADTH		
F1	11'-0"	11'-0"	2'-0"	15-#6 BARS E.W.
F2	8'-0"	8'-0"	1'-6"	10-#6 BARS E.W.
F3	5'-0"	5'-0"	1'-0"	5-#5 BARS E.W.
F4	6'-0"	6'-0"	1'-0"	10-#6 BARS E.W.
F5	3'-8"	3'-8"	1'-0"	4-#5 BARS E.W.

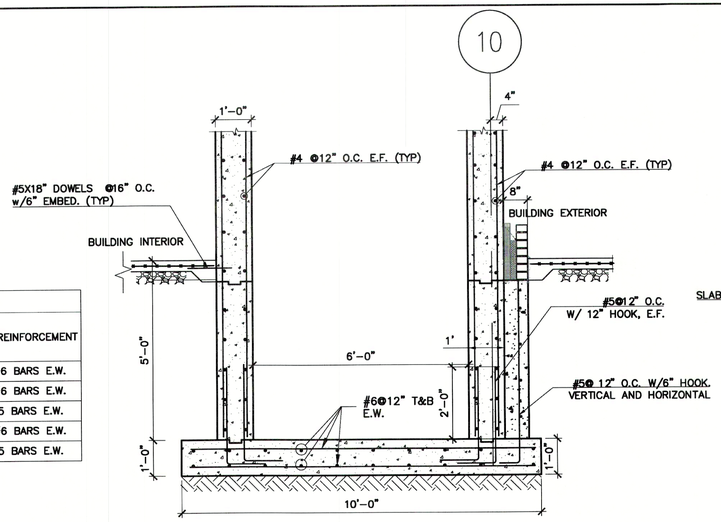

2 / 2 4 FIRST FLOOR ELEVATOR SHAT SECTION
SCALE: 1/2"=1'0"

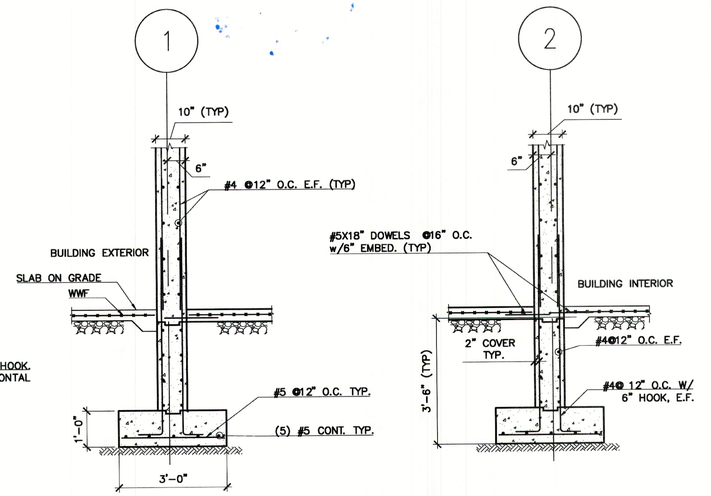

1 / 2 4 CONCRETE WALLS AND FOOTING AT FIRST FLOOR STAIRS
SCALE: 1/2"=1'0"

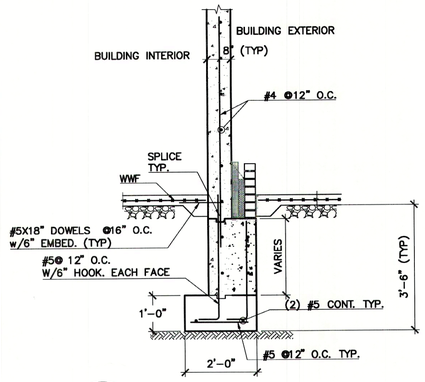

3 / 2 4 CONCRETE WALL FOUNDATION EXTERIOR (TYP)
NTS

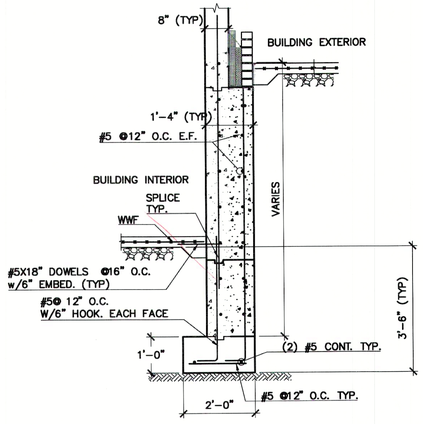

4 / 2 4 CONCRETE WALL FOUNDATION EXTERIOR (TYP)
NTS

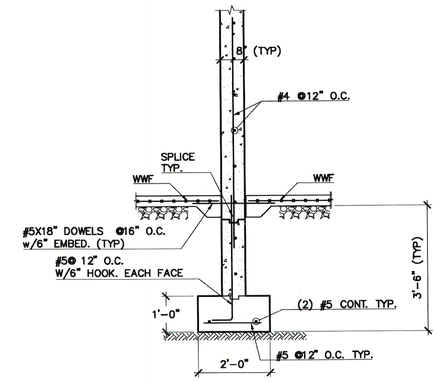

5 / 2 4 CONCRETE WALL FOUNDATION EXTERIOR (TYP)
NTS

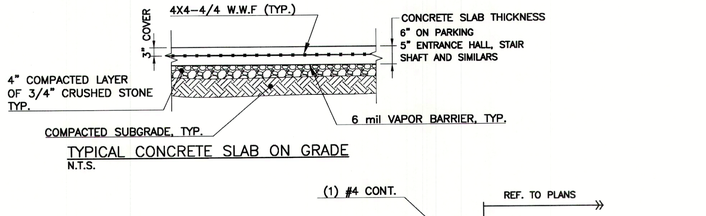

TYPICAL CONCRETE SLAB ON GRADE
N.T.S.

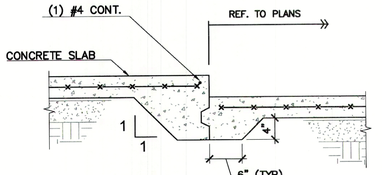

TYPICAL DEPRESSED SLAB DETAIL (GREATER THAN 4")
N.T.S.

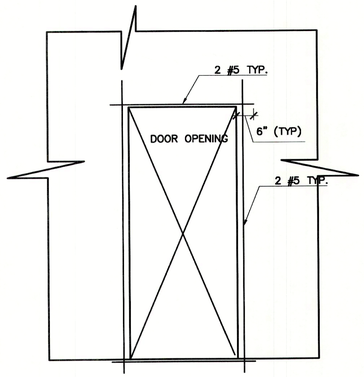

TYPICAL REINFORCEMENT FOR DOOR OPENINGS ON CONCRETE WALLS
N.T.S.

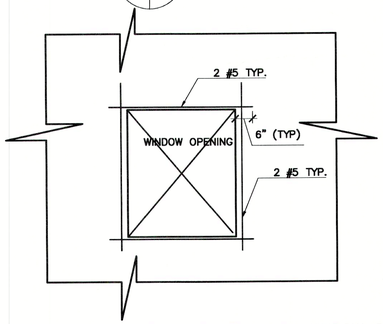

TYPICAL REINFORCEMENT FOR WINDOW OPENINGS ON CONCRETE WALLS
N.T.S.

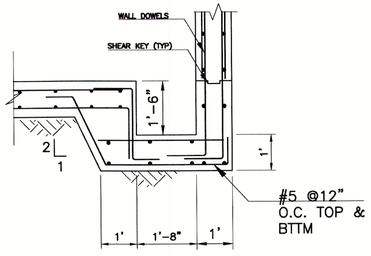

ELEVATOR SUMPUMP
N.T.S

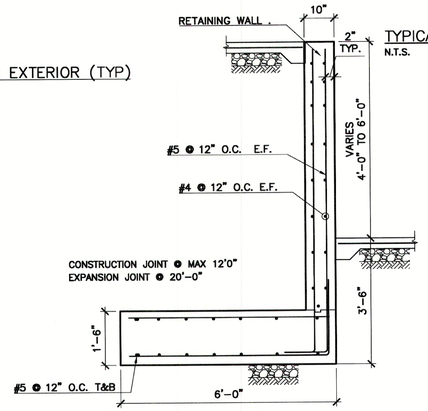

RETAINING WALL SECTION
N.T.S

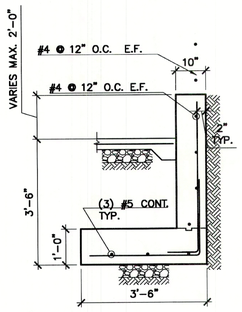

RETAINING WALL AT LIBERTY ENTRANCE
N.T.S

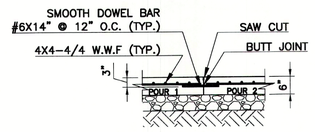

SLAB ON GRADE CONTRACTION JOINT DETAIL
N.T.S

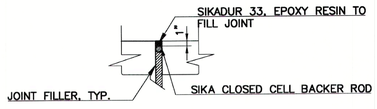

TYPICAL EXPANSION JOINT DETAIL
N.T.S.

LIBERTY PLAZA SUITES

500 COMMERCE STREET
HAWTHORNE, NY 10532

ARCHITECT
dimovski architecture
59 Kensico Road, Thornwood, NY 10594
(914) 747-3500 | (914) 747-3588 fax
www.dimovskiarchitecture.com

STRUCTURAL ENGINEER
CHARLES A. MANGANARO
CONSULTING ENGINEERS
A PROFESSIONAL CORPORATION
303 SOUTH BROADWAY, SUITE 223, TARRYTOWN, NY 10591-5488
SHAILESH R. NAIK, P.E.
NEW YORK LICENSE No. 072797-1

MEP ENGINEER

NO.	REVISION/ISSUE	DATE
2	ISSUE FOR DOB COMMENT	04/26/2021
1	ISSUE FOR PERMIT	03/12/2021

SEAL
STATE OF NEW YORK · SHAILESH RAMESH NAIK · 072797 · LICENSED PROFESSIONAL ENGINEER

PROJECT
LIBERTY PLAZA SUITES
500 COMMERCE ST.
TOWN OF MT. PLEASANT, NY

DATE:	APRIL 26, 2021
PROJECT NO:	1941
DRAWN BY:	MU
CHECKED BY:	MR
SCALE:	AS NOTED

DRAWING TITLE
STRUCTURAL FOOTINS AND WALLS DETAILS

SHEET NO.
S-004

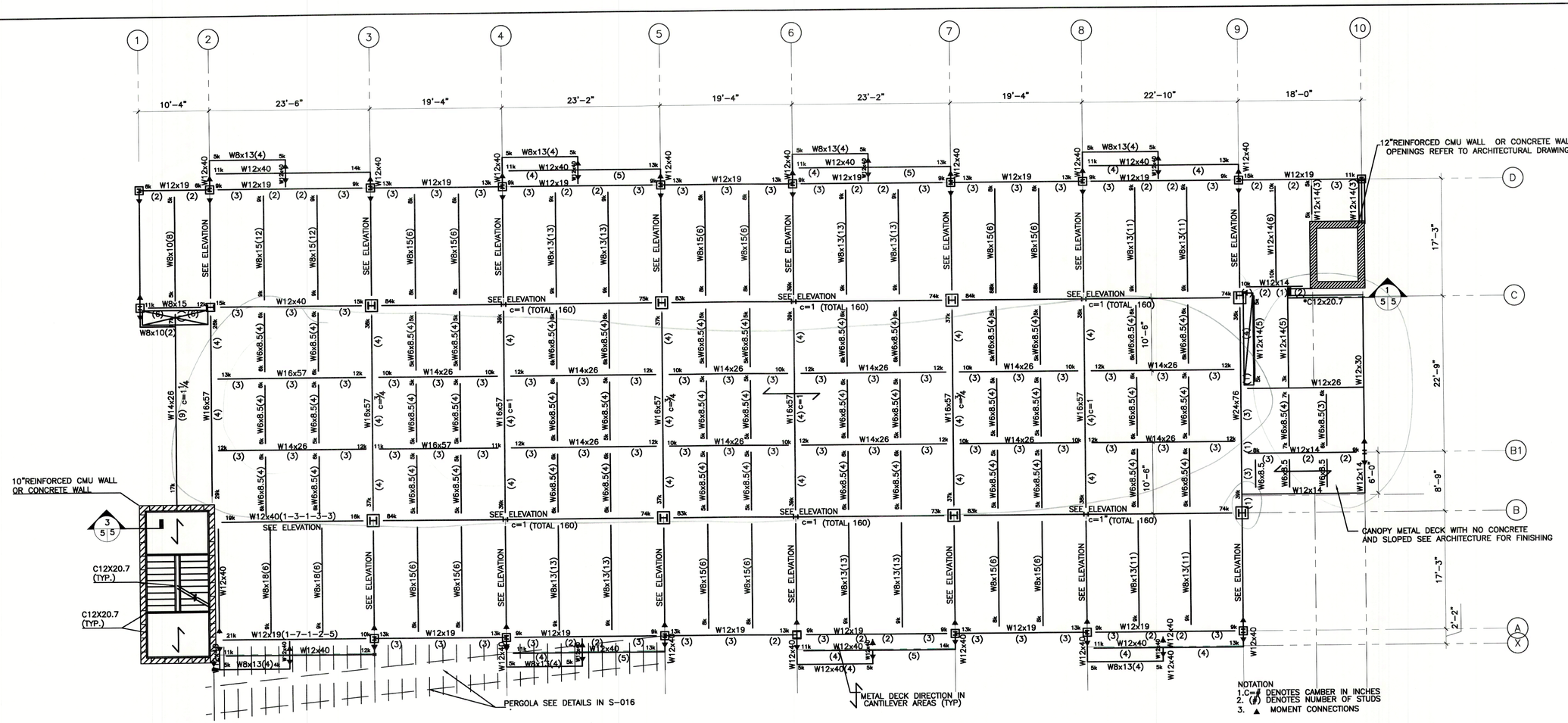

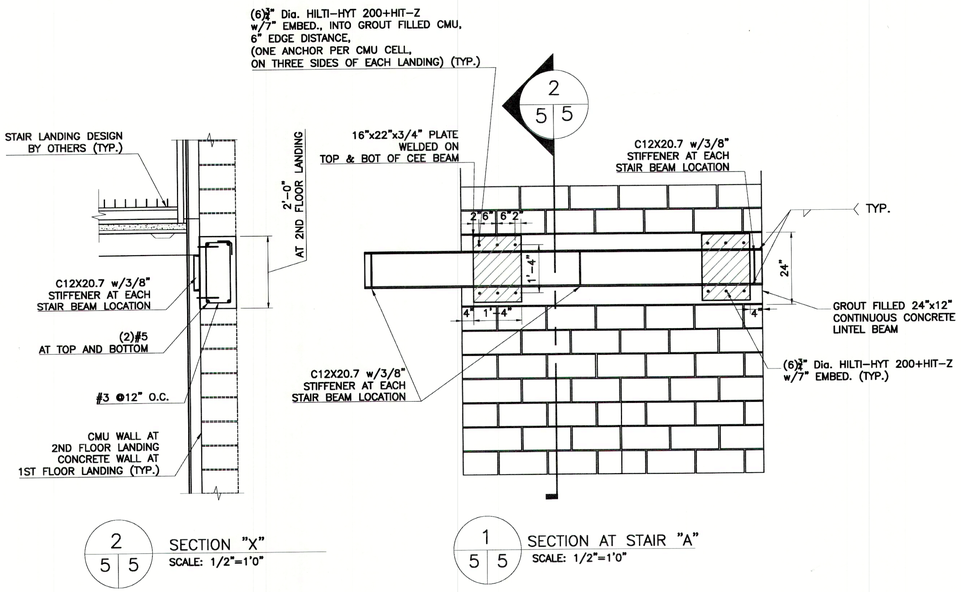

2 / 5 5 SECTION "X"
SCALE: 1/2"=1'0"

1 / 5 5 SECTION AT STAIR "A"
SCALE: 1/2"=1'0"

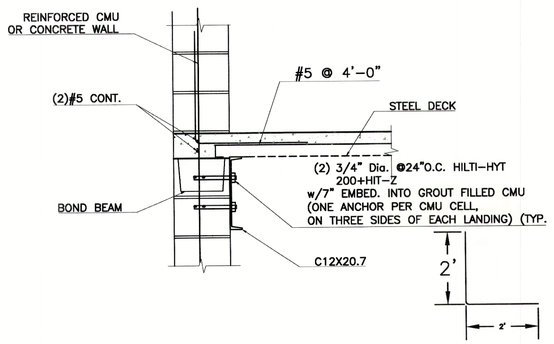

3 / 5 5 SECTION AT STAIR LANDING (TYP)
SCALE: 1/2"=1'0"

LIBERTY PLAZA SUITES

500 COMMERCE STREET
HAWTHORNE, NY 10532

ARCHITECT

dimovski architecture
59 Kensico Road, Thornwood, NY 10594
(914) 747-3500 | (914) 747-3588 fax
www.dimovskiarchitecture.com

STRUCTURAL ENGINEER

CHARLES A. MANGANARO
CONSULTING ENGINEERS
A PROFESSIONAL CORPORATION
303 SOUTH BROADWAY, SUITE 223, TARRYTOWN, NY 10591-5488
SHAILESH R. NAIK, P.E.
NEW YORK LICENSE No. 072797-1

MEP ENGINEER

NO.	REVISION/ISSUE	DATE
2	ISSUE FOR DOB COMMENT	04/26/2021
1	ISSUE FOR PERMIT	03/12/2021

SEAL

STATE OF NEW YORK · SHAILESH RAMESH NAIK · LICENSED PROFESSIONAL ENGINEER · 072797

PROJECT

LIBERTY PLAZA SUITES
500 COMMERCE ST.
TOWN OF MT. PLEASANT, NY

DATE:	APRIL 26, 2021
PROJECT NO:	1941
DRAWN BY:	MU
CHECKED BY:	MR
SCALE:	1/8"-1'

DRAWING TITLE

STRUCTURAL
SECOND FLOOR PLAN

SHEET NO. S-005

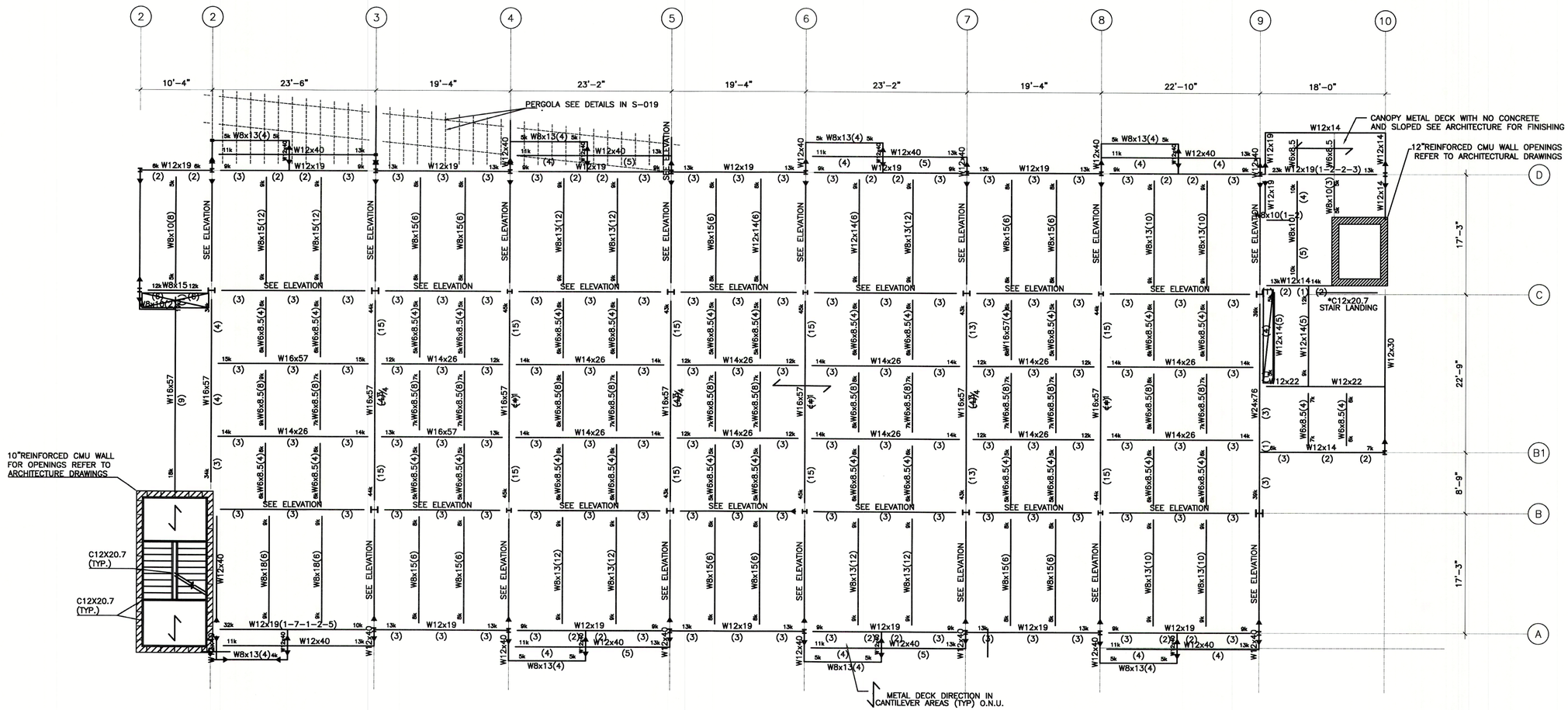

LIBERTY PLAZA SUITES

500 COMMERCE STREET
HAWTHORNE, NY 10532

ARCHITECT

dimovskiarchitecture
59 Kensico Road, Thornwood, NY 10594
(914) 747-3500 | (914) 747-3588 fax
www.dimovskiarchitecture.com

STRUCTURAL ENGINEER

CHARLES A. MANGANARO
CONSULTING ENGINEERS
A PROFESSIONAL CORPORATION
303 SOUTH BROADWAY, SUITE 223, TARRYTOWN, NY 10591–5488

SHAILESH R. NAIK, P.E.
NEW YORK LICENSE No. 072797-1

MEP ENGINEER

NO.	REVISION/ISSUE	DATE
2	ISSUE FOR DOB COMMENT	04/26/2021
1	ISSUE FOR PERMIT	03/12/2021

SEAL

STATE OF NEW YORK · SHAILESH RAMESH NAIK · 072797 · LICENSED PROFESSIONAL ENGINEER

PROJECT

LIBERTY PLAZA SUITES
500 COMMERCE ST.
TOWN OF MT. PLEASANT, NY

DATE:	APRIL 26, 2021
PROJECT NO:	1941
DRAWN BY:	MU
CHECKED BY:	MR
SCALE:	1/8"=1"

DRAWING TITLE

STRUCTURAL THIRD FLOOR PLAN

SHEET NO.

S–006

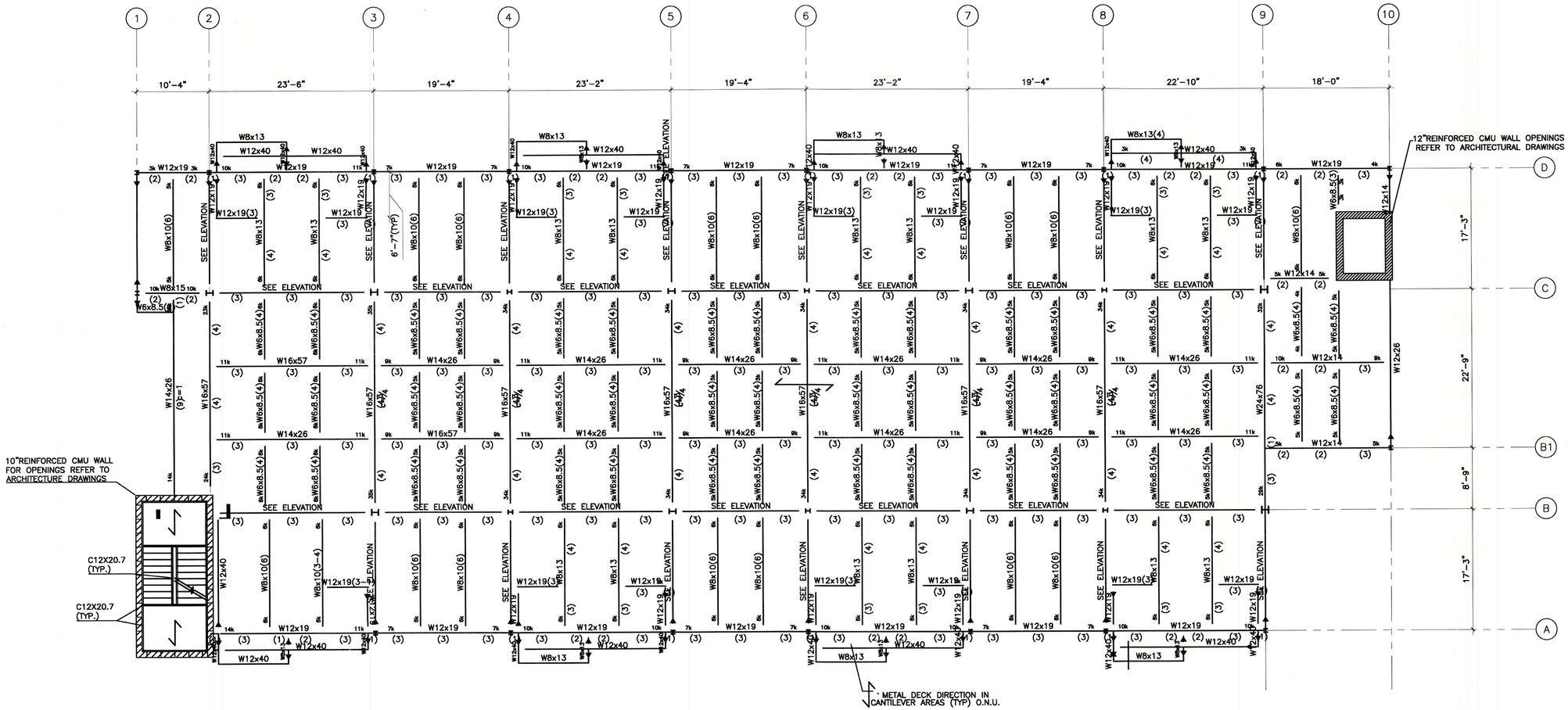

LIBERTY PLAZA SUITES

500 COMMERCE STREET
HAWTHORNE, NY 10532

ARCHITECT

dimovski architecture pllc
59 Kensico Road, Thornwood, NY 10594
(914) 747-3500 | (914) 747-3588 fax
www.dimovskiarchitecture.com

STRUCTURAL ENGINEER

CHARLES A. MANGANARO
CONSULTING ENGINEERS
A PROFESSIONAL CORPORATION
303 SOUTH BROADWAY, SUITE 223, TARRYTOWN, NY 10591–5488

SHAILESH R. NAIK, P.E.
NEW YORK LICENSE No. 072797-1

MEP ENGINEER

NO.	REVISION/ISSUE	DATE
2	ISSUE FOR DOB COMMENT	04/26/2021
1	ISSUE FOR PERMIT	03/12/2021

SEAL

STATE OF NEW YORK
SHAILESH RAMESH NAIK
072797
LICENSED PROFESSIONAL ENGINEER

PROJECT

LIBERTY PLAZA SUITES
500 COMMERCE ST.
TOWN OF MT. PLEASANT, NY

DATE:	APRIL 26, 2021
PROJECT NO:	1941
DRAWN BY:	MU
CHECKED BY:	MR
SCALE:	1/8"=1'

DRAWING TITLE

STRUCTURAL ROOF FLOOR PLAN

SHEET NO.

S–007

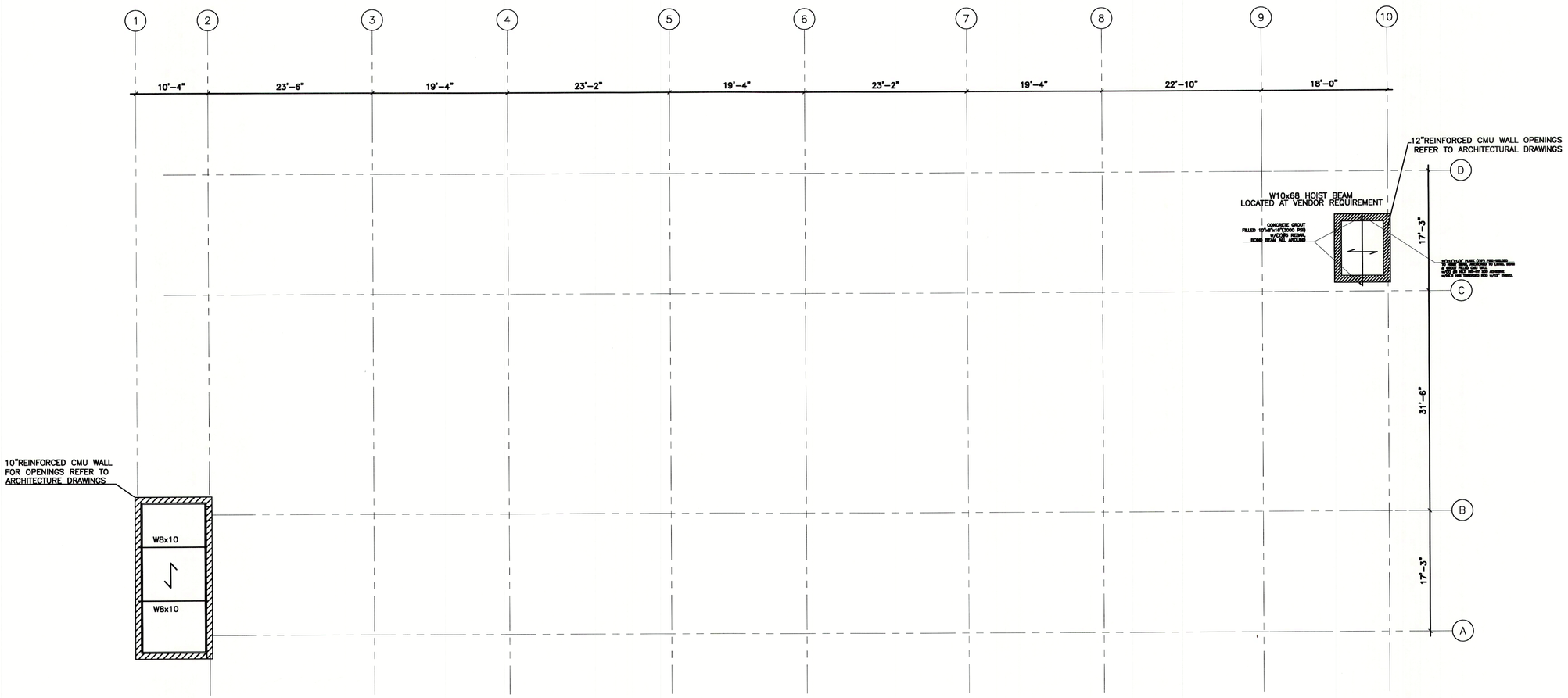

LIBERTY PLAZA SUITES

500 COMMERCE STREET
HAWTHORNE, NY 10532

ARCHITECT

dimovski architecture p.c.
59 Kensico Road, Thornwood, NY 10594
(914) 747-3500 | (914) 747-3588 fax
www.dimovskiarchitecture.com

STRUCTURAL ENGINEER

CHARLES A. MANGANARO
CONSULTING ENGINEERS
A PROFESSIONAL CORPORATION
303 SOUTH BROADWAY, SUITE 223, TARRYTOWN, NY 10591–5488

SHAILESH R. NAIK, P.E.
NEW YORK LICENSE No. 072797-1

MEP ENGINEER

NO.	REVISION/ISSUE	DATE
2	ISSUE FOR DOB COMMENT	04/26/2021
1	ISSUE FOR PERMIT	03/12/2021

SEAL

STATE OF NEW YORK
SHAILESH RAMESH NAIK
072797
LICENSED PROFESSIONAL ENGINEER

PROJECT

LIBERTY PLAZA SUITES
500 COMMERCE ST.
TOWN OF MT. PLEASANT, NY

DATE:	APRIL 26, 2021
PROJECT NO:	1941
DRAWN BY:	MU
CHECKED BY:	MR
SCALE:	AS NOTED

DRAWING TITLE

STRUCTURAL
STAIRS AND ELEVATOR
ROOF FLOOR PLAN

SHEET NO. S–008

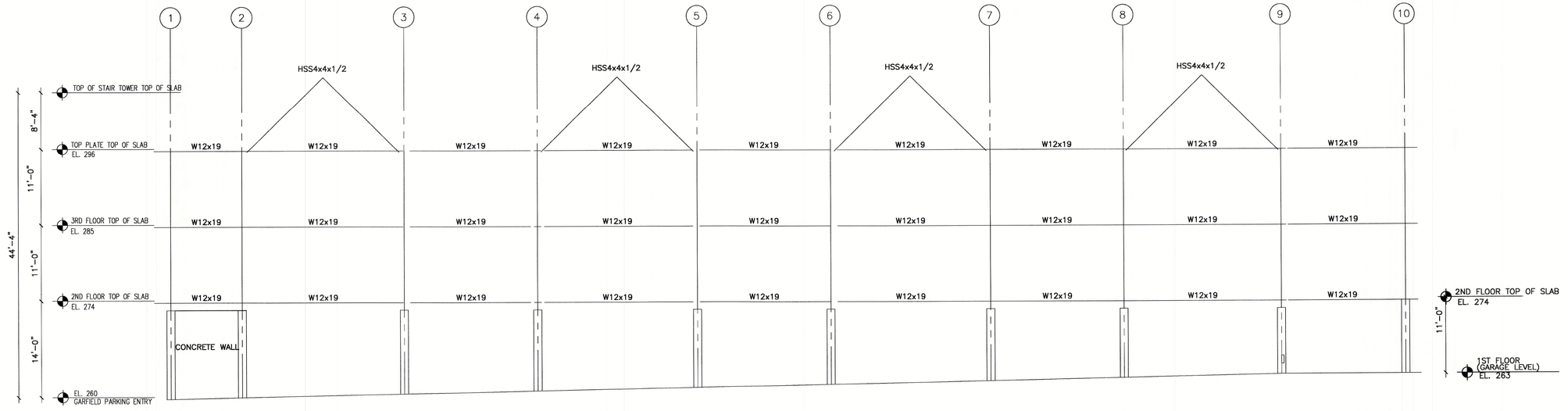

FRAME D
NTS

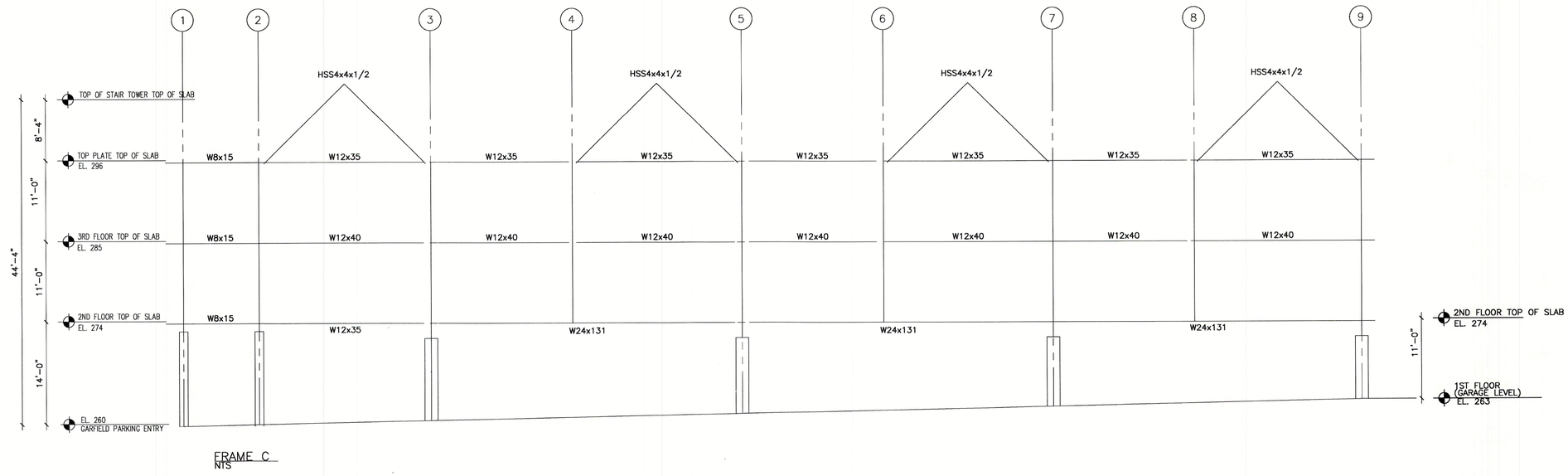

FRAME C
NTS

LIBERTY PLAZA SUITES

500 COMMERCE STREET
HAWTHORNE, NY 10532

ARCHITECT

dimovski architecture PLLC
59 Kensico Road, Thornwood, NY 10594
(914) 747-3500 | (914) 747-3588 fax
www.dimovskiarchitecture.com

STRUCTURAL ENGINEER

CHARLES A. MANGANARO
CONSULTING ENGINEERS
A PROFESSIONAL CORPORATION
303 SOUTH BROADWAY, SUITE 223, TARRYTOWN, NY 10591-5488

SHAILESH R. NAIK, P.E.
NEW YORK LICENSE No. 072797-1

MEP ENGINEER

NO.	REVISION/ISSUE	DATE
2	ISSUE FOR DOB COMMENT	04/26/2021
1	ISSUE FOR PERMIT	03/12/2021

SEAL

STATE OF NEW YORK · SHAILESH RAMESH NAIK · 072797 · LICENSED PROFESSIONAL ENGINEER

PROJECT

LIBERTY PLAZA SUITES
500 COMMERCE ST.
TOWN OF MT. PLEASANT, NY

DATE:	APRIL 26, 2021
PROJECT NO:	1941
DRAWN BY:	MU
CHECKED BY:	MR
SCALE:	AS NOTED

DRAWING TITLE

STRUCTURAL
ELEVATIONS FRAME C & D

SHEET NO.

S-009

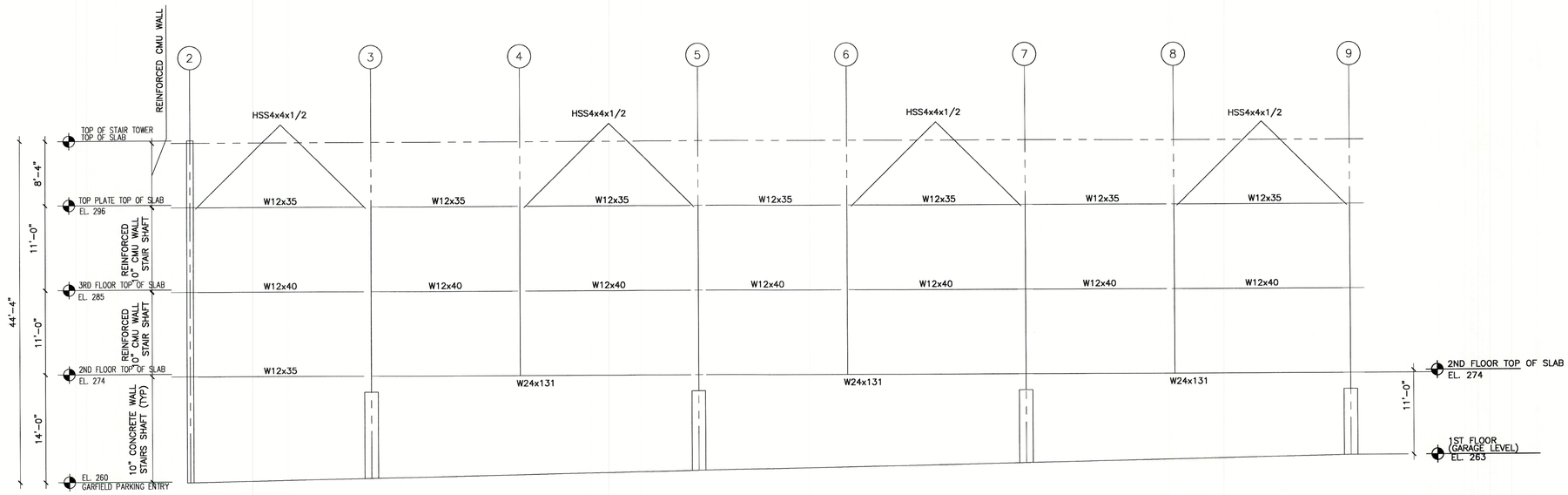

FRAME B
NTS

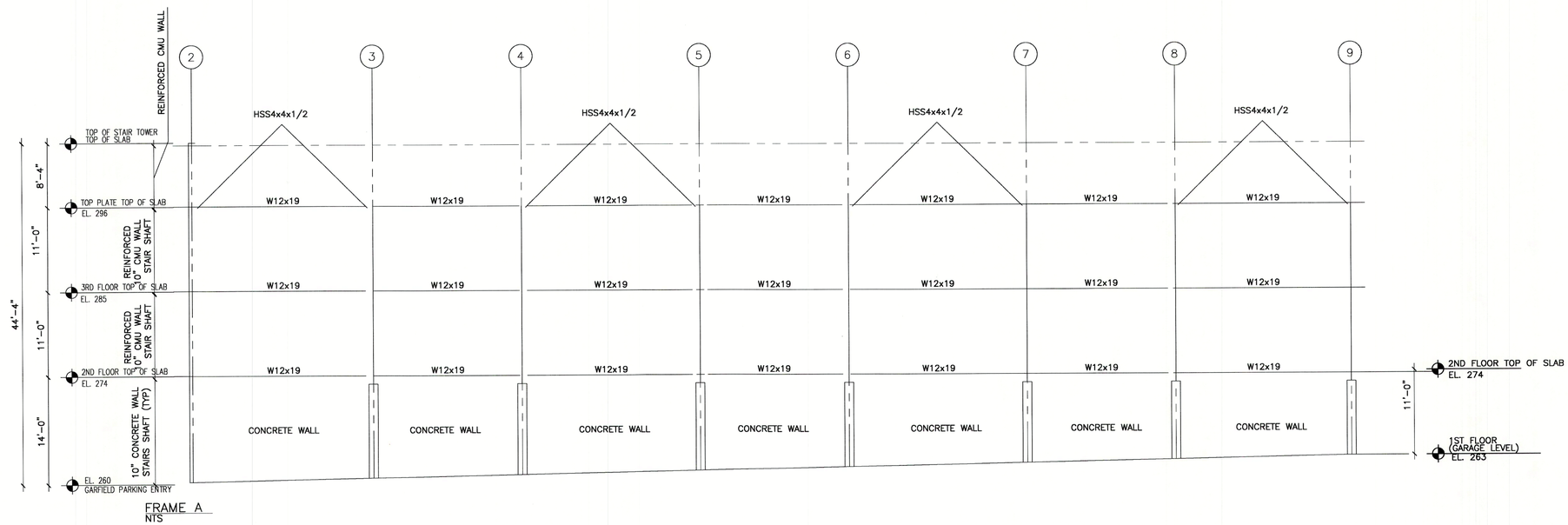

FRAME A
NTS

LIBERTY PLAZA SUITES

500 COMMERCE STREET
HAWTHORNE, NY 10532

ARCHITECT

dimovski architecture PLLC
59 Kensico Road, Thornwood, NY 10594
(914) 747-3500 | (914) 747-3588 fax
www.dimovskiarchitecture.com

STRUCTURAL ENGINEER

CHARLES A. MANGANARO
CONSULTING ENGINEERS
A PROFESSIONAL CORPORATION
303 SOUTH BROADWAY, SUITE 223, TARRYTOWN, NY 10591-5488

SHAILESH R. NAIK, P.E.
NEW YORK LICENSE No. 072797-1

MEP ENGINEER

NO.	REVISION/ISSUE	DATE
2	ISSUE FOR DOB COMMENT	04/26/2021
1	ISSUE FOR PERMIT	03/12/2021

SEAL

PROJECT

LIBERTY PLAZA SUITES
500 COMMERCE ST.
TOWN OF MT. PLEASANT, NY

DATE:	APRIL 26, 2021
PROJECT NO:	1941
DRAWN BY:	MU
CHECKED BY:	MR
SCALE:	AS NOTED

DRAWING TITLE

STRUCTURAL
ELEVATIONS FRAMES A & B

SHEET NO.

S-010

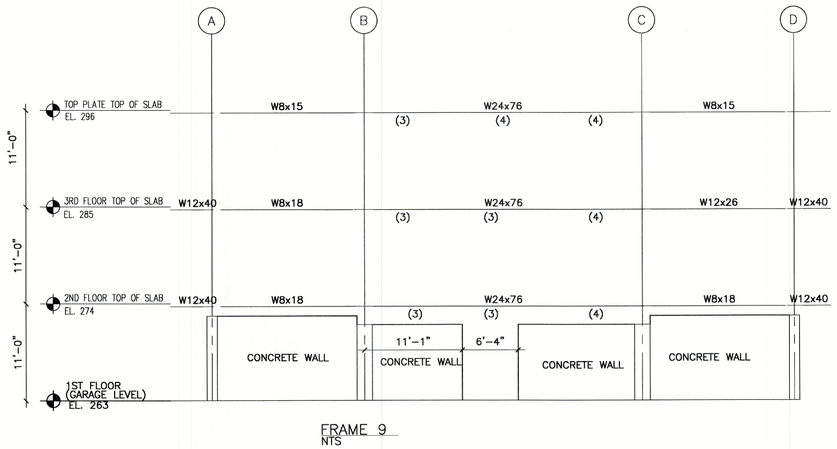

FRAME 9
NTS

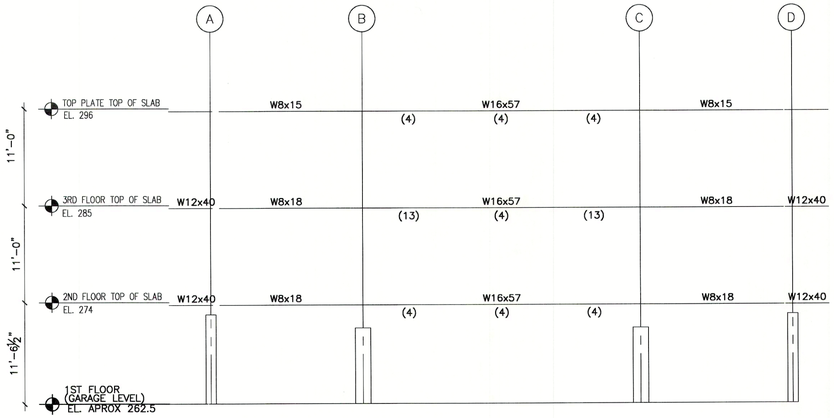

FRAME 7
NTS

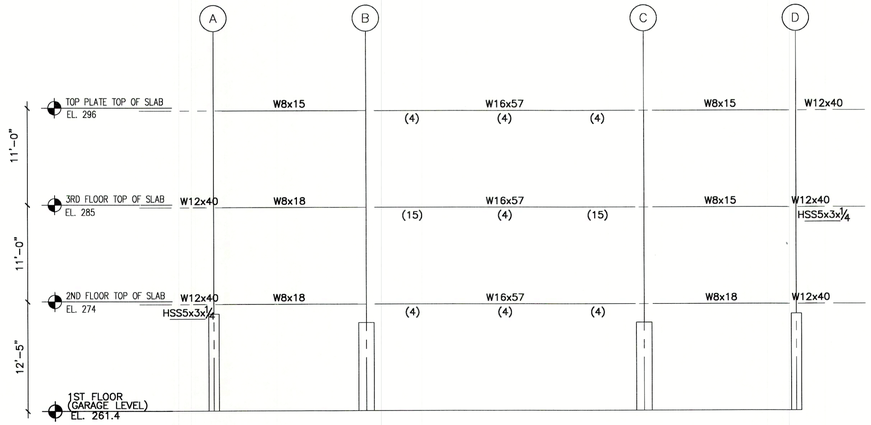

FRAME 5
NTS

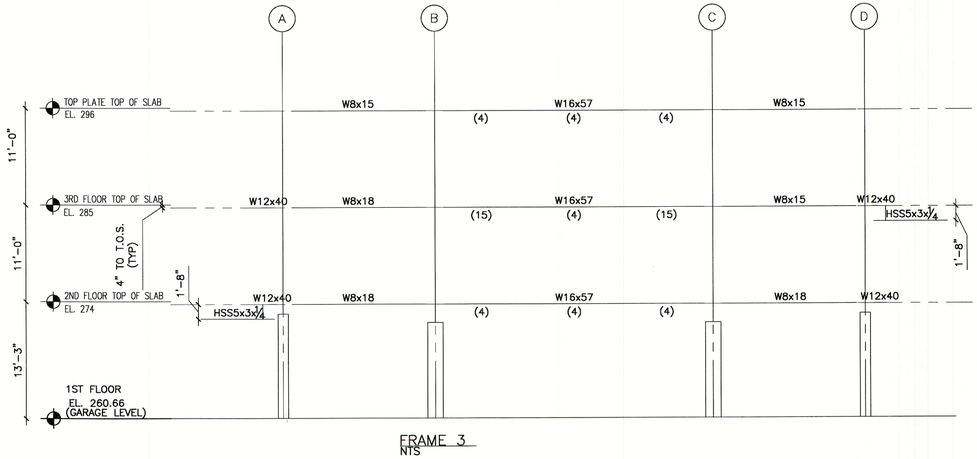

FRAME 3
NTS

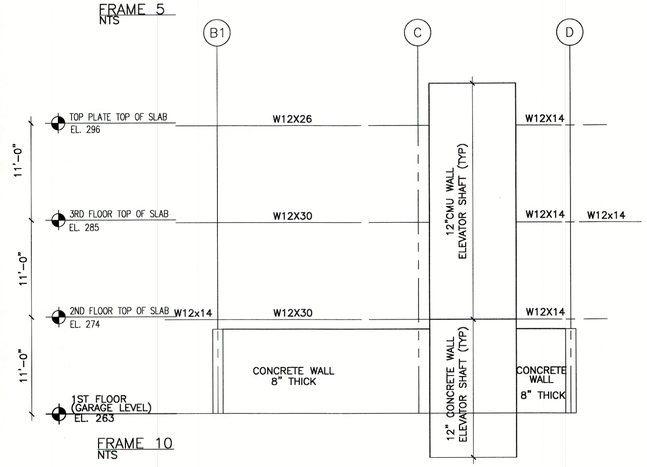

FRAME 10
NTS

LIBERTY PLAZA SUITES

500 COMMERCE STREET
HAWTHORNE, NY 10532

ARCHITECT

dimovski architecture PLLC
59 Kensico Road, Thornwood, NY 10594
(914) 747-3500 | (914) 747-3588 fax
www.dimovskiarchitecture.com

STRUCTURAL ENGINEER

CHARLES A. MANGANARO
CONSULTING ENGINEERS
A PROFESSIONAL CORPORATION
303 SOUTH BROADWAY, SUITE 223, TARRYTOWN, NY 10591-5488

SHAILESH R. NAIK, P.E.
NEW YORK LICENSE No. 072797-1

MEP ENGINEER

NO.	REVISION/ISSUE	DATE
2	ISSUE FOR DOB COMMENT	04/26/2021
1	ISSUE FOR PERMIT	03/12/2021

SEAL

STATE OF NEW YORK
SHAILESH RAMESH NAIK
072797
LICENSED PROFESSIONAL ENGINEER

PROJECT

LIBERTY PLAZA SUITES
500 COMMERCE ST.
TOWN OF MT. PLEASANT, NY

DATE:	APRIL 26, 2021
PROJECT NO:	1941
DRAWN BY:	MU
CHECKED BY:	MR
SCALE:	AS NOTED

DRAWING TITLE

STRUCTURAL
ELEVATION FRAME 3,5,7 & 9

SHEET NO.

S-011

BEAM	THICKNESS	BOLTS
W12x40	¾"	¾"DIA
W12x35	¾"	¾"ø
W8x21	⅝"	⅝"ø
W8x15	⅝"	⅝"ø

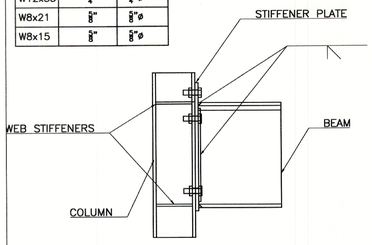

TYPICAL MOMENT CONNECTION AT BALCONY
N.T.S.

NOTES:
1. BALCONY BEAM TO COLUMN CONNECTION

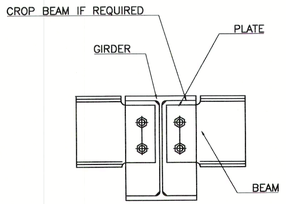

TYPICAL BEAM TO BEAM CONNECTION
N.T.S.

NOTES:
1. SEE THE SHEAR CONNECTION TABLE FOR THE ANGLE SIZE, BOLT TYPE, BOLT SIZE, ETC.
2. THE EDGE DISTANCE SHALL BE 1.75X BOLT DIAM., 1 ½" MINIMUM.

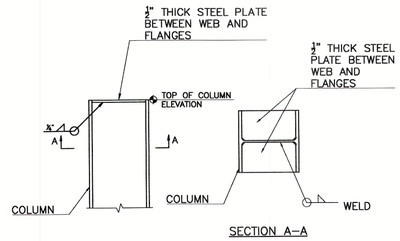

TYPICAL TOP OF COLUMN DETAIL
N.T.S.

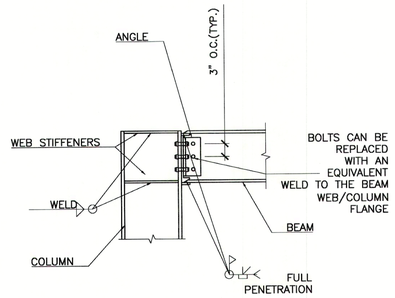

TYPICAL MOMENT CONNECTION DETAIL (OPTION 1)
N.T.S.

NOTES:
1. SEE THE SHEAR CONNECTION TABLE FOR THE ANGLE SIZE, BOLT TYPE, BOLT SIZE, ETC.
2. THE EDGE DISTANCE SHALL BE 1.75X BOLT DIAM., 1 ½" MINIMUM.
3. SIZE OF STIFFENERS (½"MIN.) AND WELD (¼" MIN.) TO BE DETERMINED DURING SHOP DRAWING REVIEW.

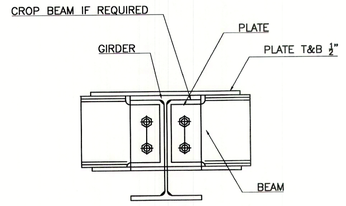

TYPICAL BEAM TO BEAM MOMENT CONNECTION
N.T.S.

NOTES:
1. SEE THE SHEAR CONNECTION TABLE FOR THE ANGLE SIZE, BOLT TYPE, BOLT SIZE, ETC.
2. THE EDGE DISTANCE SHALL BE 1.75X BOLT DIAM., 1 ½" MINIMUM.

	PLATE	BOLTS
W6x_	1/2"	2x 5/8"ø
W8x_	1/2"	2x 5/8"ø
W12x_	1/2"	3x ¾"ø
W14x_	1/2"	5x ¾"ø
W16x_	1/2"	4x 1"ø
W24x131	1/2"	7x7/8"
W24x76	1/2"	7x3/4"

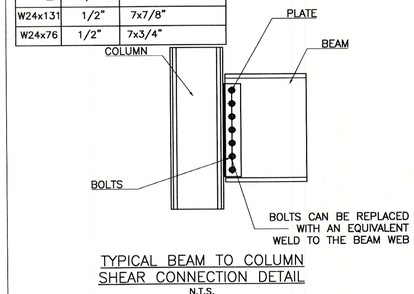

TYPICAL BEAM TO COLUMN SHEAR CONNECTION DETAIL
N.T.S.

NOTES:
1. SEE THE SHEAR CONNECTION TABLE FOR THE ANGLE SIZE, BOLT TYPE, BOLT SIZE, ETC.
2. THE EDGE DISTANCE SHALL BE 1.75X BOLT DIAM., 1 ½" MINIMUM.

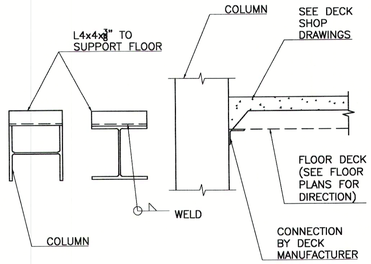

TYPICAL FLOOR SUPPORT AT COLUMN DETAIL
N.T.S.

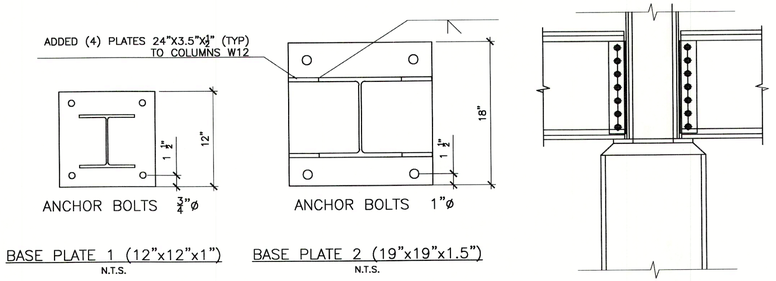

BASE PLATE 1 (12"x12"x1")
N.T.S.

BASE PLATE 2 (19"x19"x1.5")
N.T.S.

BASE PLATES & PIER ELEVATION
N.T.S.

COLUMN SCHEDULE

COLUMN LOCATION / FLOOR ELEVATION	A 1	A 2	A 3	A 4	A 5	A 6	A 7	A 8	A 9	A 10	B 1	B 2	B 3	B 4	B 5	B 6	B 7	B 8	B 9	B 10	B.2 10	C 1	C 2	C 3	C 4	C 5	C 6	C 7	C 8	C 9	C 10	C.1 10	C.2 10	D 1	D 2	D 3	D 4	D 5	D 6	D 7	D 8	D 9	D 10
304'–8" T.O.C. STAIR TOWER ELEVATION 8'–4"																																										
295'–8" T.O.S. ROOF PLATE ELEVATION 11'–0"	I	I	W6x25	W6x25	W6x25	W6x25	W6x25	W6x25	W6x25	I	I	I	W12x53	W8x24	W12x40	W8x24	W12x40	W8x24	W12x40	I	W6x20	W6x20	W12x40	W12x40	W8x24	W12x40	W8x24	W12x40	W8x24	W12x40	I			W6x20	W6x25	W6x25	W6x25	W6x25	W6x25	W6x25	W6x25	W6x25	W6x25
284'–8" 3RD FLOOR T.O.S. ELEVATION 11'–0"	I	I	W6x25	W6x25	W6x25	W6x25	W6x25	W6x25	W6x25	I	I	I	W12x53	W8x24	W12x40	W8x24	W12x40	W8x24	W12x40	I	W6x20	W6x20	W12x40	W12x40	W8x24	W12x40	W8x24	W12x40	W8x24	W12x40	I			W6x20	W6x25	W6x25	W6x25	W6x25	W6x25	W6x25	W6x25	W6x25	W6x25
266'–8" 2ND FLOOR T.O.C. PEDESTAL ELEVATION VARIES	I	I	P2	P2	P2	P2	P2	P2	P2	I	I	I	P1	I	P1	I	P1	I	P1	I	P2	P2	P1	P1	I	P1	I	P1	I	P1	I			P2	P2	P2	P2	P2	P2	P2	P2	P2	P2
263'–0" GROUND FLOOR SLAB ELEVATION (VARIES/SLOPES) 0'–0"																																										
LOAD (K) (PLATE) ASD			97	116	87	116	87	114	63				240		318		318		207		62	54	128	24		312		312		213				30	87	99	116	88	114	87	114	91	16
BASE PLATE TYPE (36 KSI)			BP1	BP1	BP1	BP1	BP1	BP1	BP1				BP2		BP2		BP2		BP2		BP1	BP1	BP2	BP2		BP2		BP2		BP2				BP1	BP1	BP1	BP1	BP1	BP1	BP1	BP1	BP1	BP1

NOTES:
1. SHOP DRAWINGS SHALL INCLUDE ALL BASE PLATES AND CONNECTIONS
2. SEE THE TYPICAL DETAILS FOR ALL CONNECTIONS, SPLICES, ETC.

LIBERTY PLAZA SUITES

500 COMMERCE STREET
HAWTHORNE, NY 10532

ARCHITECT
dimovski architecture PLLC
59 Kensico Road, Thornwood, NY 10594
(914) 747-3500 | (914) 747-3588 fax
www.dimovskiarchitecture.com

STRUCTURAL ENGINEER
CHARLES A. MANGANARO CONSULTING ENGINEERS
A PROFESSIONAL CORPORATION
303 SOUTH BROADWAY, SUITE 223, TARRYTOWN, NY 10591–5488
SHAILESH R. NAIK, P.E.
NEW YORK LICENSE No. 072797-1

MEP ENGINEER
OLA Consulting Engineers
50 Broadway,
Hawthorne, NY 10532
914.747.2800
8 West 38th Street,
Suite 501
New York, NY 10018
646.849.4110
olace.com

NO.	REVISION/ISSUE	DATE
2	ISSUE FOR DOB COMMENT	04/26/2021
1	ISSUE FOR PERMIT	03/12/2021

SEAL
STATE OF NEW YORK · SHAILESH RAMESH NAIK · 072797 · LICENSED PROFESSIONAL ENGINEER

PROJECT
LIBERTY PLAZA SUITES
500 COMMERCE ST.
TOWN OF MT. PLEASANT, NY

DATE:	APRIL 26, 2021
PROJECT NO:	1941
DRAWN BY:	LC
CHECKED BY:	MR
SCALE:	AS NOTED

DRAWING TITLE
STRUCTURAL DETAILS AND SCHEDULE

SHEET NO.
S–012

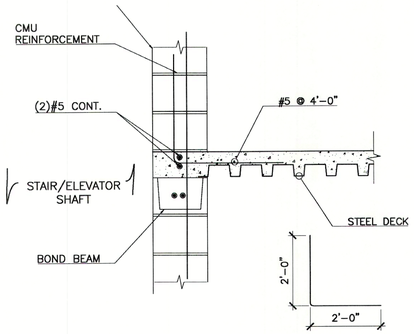

TYPICAL CMU CONNECTION DETAIL
N.T.S.

NOTES:
1. SEE FLOOR PLANS FOR DECK SIZE, ELEVATION AND DIRECTION.
2. SEE DECK SHOP DRAWINGS FOR ALL DECK REINFORCEMENT.
3. SEE SHOP DRAWINGS FOR ALL POUR STOP DETAILS

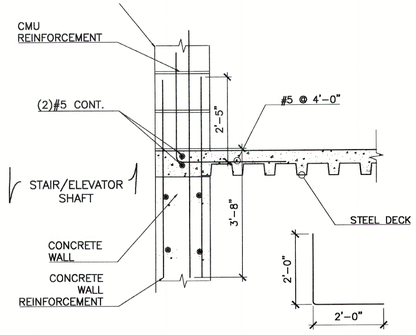

TYPICAL CMU CONNECTION DETAIL
N.T.S.

NOTES:
1. SEE FLOOR PLANS FOR DECK SIZE, ELEVATION AND DIRECTION.
2. SEE DECK SHOP DRAWINGS FOR ALL DECK REINFORCEMENT.
3. SEE SHOP DRAWINGS FOR ALL POUR STOP DETAILS

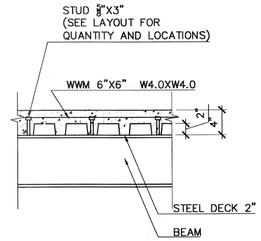

TYPICAL METAL DECK SECTION
N.T.S.

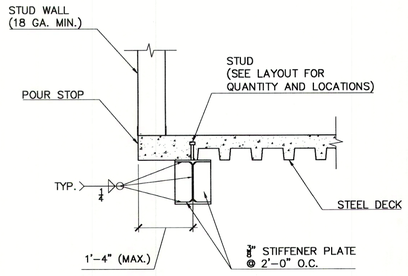

TYPICAL STUD WALL CONNECTION DETAIL
N.T.S.

NOTES:
1. SEE FLOOR PLANS FOR DECK SIZE, ELEVATION AND DIRECTION. SEE DECK SHOP DRAWINGS FOR ALL DECK REINFORCEMENT.
2. SEE SHOP DRAWINGS FOR ALL POUR STOP DETAILS

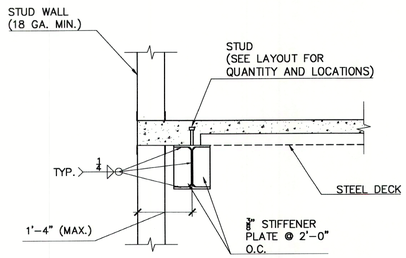

TYPICAL STUD WALL CONNECTION DETAIL
N.T.S.

NOTES:
1. SEE FLOOR PLANS FOR DECK SIZE, ELEVATION AND DIRECTION.
2. SEE DECK SHOP DRAWINGS FOR ALL DECK REINFORCEMENT.
3. SEE SHOP DRAWINGS FOR ALL POUR STOP DETAILS

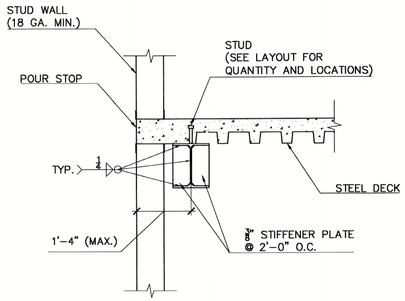

TYPICAL STUD WALL CONNECTION DETAIL
N.T.S.

NOTES:
1. SEE FLOOR PLANS FOR DECK SIZE, ELEVATION AND DIRECTION. SEE DECK SHOP DRAWINGS FOR ALL DECK REINFORCEMENT.
2. SEE SHOP DRAWINGS FOR ALL POUR STOP DETAILS

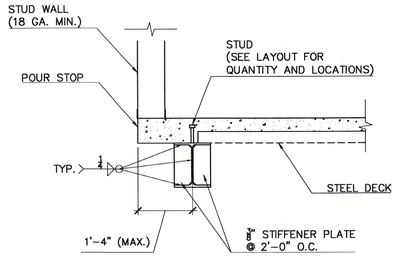

TYPICAL STUD WALL CONNECTION DETAIL
N.T.S.

NOTES:
1. SEE FLOOR PLANS FOR DECK SIZE, ELEVATION AND DIRECTION. SEE DECK SHOP DRAWINGS FOR ALL DECK REINFORCEMENT.
2. SEE SHOP DRAWINGS FOR ALL POUR STOP DETAILS

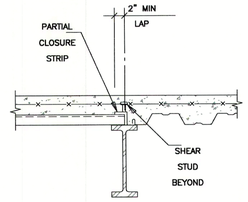

FOR BEAM FLANGE
LESS THAN 6"

CHANGE IN DECK DIRECTION

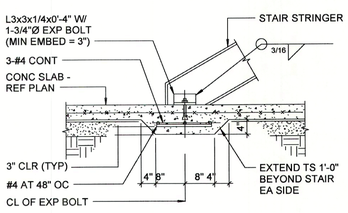

TYPICAL THICKENED SLAB / KEYED
CONSTRUCTION JOINT DETAIL
NTS

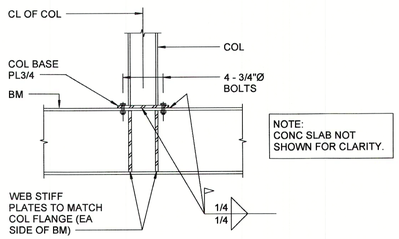

COLUMN WEB PARALLEL

TYPICAL TRANSFER BEAM DETAILS
NTS

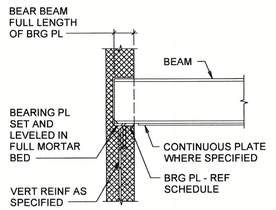

PERPENDICULAR TO WALL

TYPICAL BEAM BEARING ON MASONRY DETAILS
NTS

BEAM BEARING PLATE SCHEDULE		
BEAM	BEARING PL	HEADED STUDS
W8, W12	PL3/4x7x7	2- 3/4"Ø x5" AT 5" OC
W14, W16	PL3/4x7x10	2- 3/4"Ø x5" AT 8" OC

LIBERTY PLAZA SUITES

500 COMMERCE STREET
HAWTHORNE, NY 10532

ARCHITECT

dimovski architecture P.L.L.C.
59 Kensico Road, Thornwood, NY 10594
(914) 747-3500 | (914) 747-3588 fax
www.dimovskiarchitecture.com

STRUCTURAL ENGINEER

CHARLES A. MANGANARO
CONSULTING ENGINEERS
A PROFESSIONAL CORPORATION
303 SOUTH BROADWAY, SUITE 223, TARRYTOWN, NY 10591-5488

SHAILESH R. NAIK, P.E.
NEW YORK LICENSE No. 072797-1

MEP ENGINEER

OLA Consulting Engineers
50 Broadway,
Hawthorne, NY 10532
914.747.2800

8 West 38th Street,
Suite 501
New York, NY 10018
646.849.4110

olace.com

NO.	REVISION/ISSUE	DATE
2	ISSUE FOR DOB COMMENT	04/26/2021
1	ISSUE FOR PERMIT	03/12/2021

SEAL

PROJECT

LIBERTY PLAZA SUITES
500 COMMERCE ST.
TOWN OF MT. PLEASANT, NY

DATE:	APRIL 26, 2021
PROJECT NO:	1941
DRAWN BY:	LC
CHECKED BY:	MR
SCALE:	AS NOTED

DRAWING TITLE

STRUCTURAL DETAILS

SHEET NO.

S-013

BEAM BEARING PLATE SCHEDULE		
BEAM	BEARING PLATE	HEADED STUDS
W8, W12	PL ¾"x7"x7"	(2) ¾"DIA.x5" @5" O.C
W14, W16	PL ¾"x7"x10"	(2) ¾"DIA.x5" @8" O.C

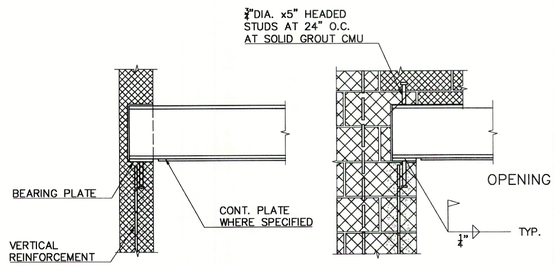

PERPENDICULAR TO WALL PARALLEL TO WALL

TYPICAL BEAM BEARING ON MASONRY DETAILS
N.T.S

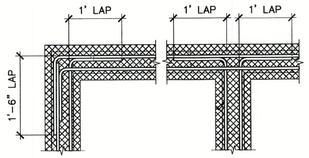

CONCRETE WALL CORNER AND INTERSECTION

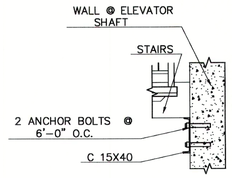

TYPICAL BEARING BEAM FOR STAIRS
N.T.S

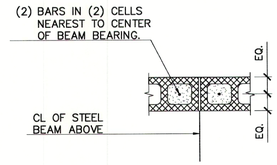

BEAM BEARING PERPENDICULAR
N.T.S.

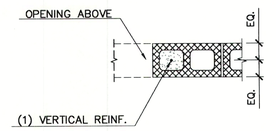

OPENING < 48"
N.T.S.

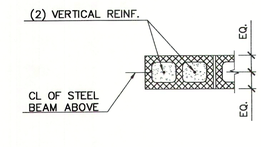

BEAM BEARING AT END
N.T.S.

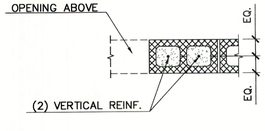

OPENING > 48"
N.T.S.

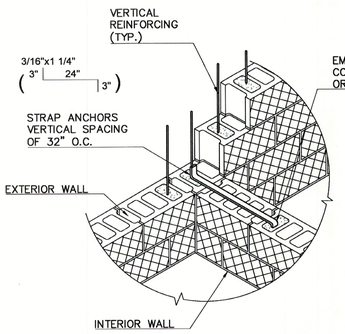

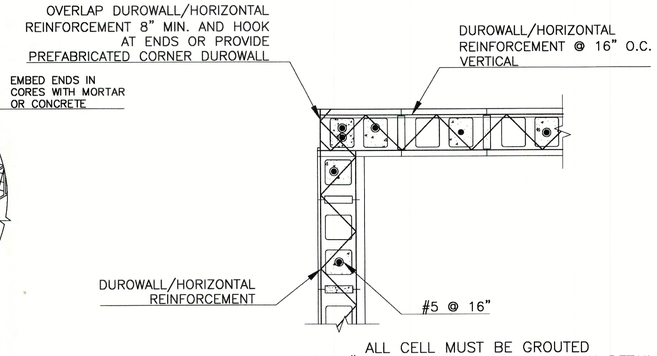

ALL CELL MUST BE GROUTED
REBAR #5 EVERY OTHER CELL U.N.O IN DETAILS

TYPICAL DETAIL AT INTERSECTION OF EXTERIOR AND INTERIOR CMU WALLS
N.T.S.

TYPICAL STRUCTURAL WALL CORNER DETAIL
N.T.S

BOND BEAM LINTEL SCHEDULE			
SPAN	DEPTH "D"	REINFORCING	
		10"WIDE	12"WIDE
0 TO 3'-4"	8"	(2)#4 BOTTOM	(2)#5 BOTTOM
3'-5" TO 5'-4"	8"	(2)#5 BOTTOM	(2)#5 BOTTOM

NOTES:
1. REFER TO ARCHITECTURAL DRAWINGS FOR SIZE AND LOCATION OF OPENINGS.

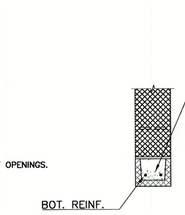

BOND BEAM LINTEL DETAIL
N.T.S.

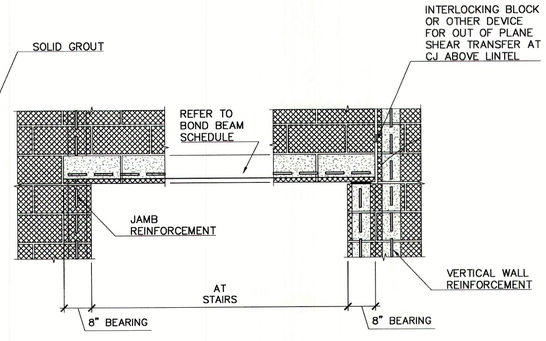

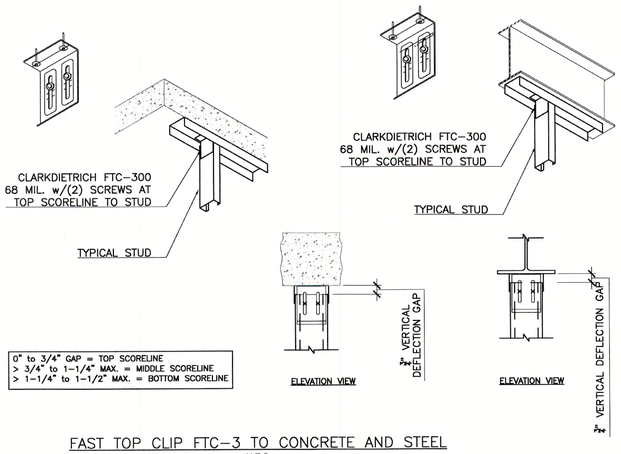

FAST TOP CLIP FTC-3 TO CONCRETE AND STEEL
N.T.S.

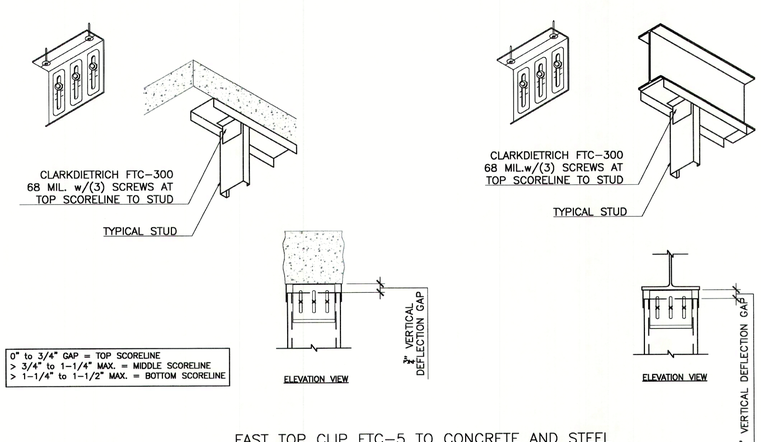

FAST TOP CLIP FTC-5 TO CONCRETE AND STEEL
N.T.S.

LIBERTY PLAZA SUITES

500 COMMERCE STREET
HAWTHORNE, NY 10532

ARCHITECT
dimovski architecture PLLC
59 Kensico Road, Thornwood, NY 10594
(914) 747-3500 | (914) 747-3588 fax
www.dimovskiarchitecture.com

STRUCTURAL ENGINEER
CHARLES A. MANGANARO
CONSULTING ENGINEERS
A PROFESSIONAL CORPORATION
303 SOUTH BROADWAY, SUITE 223, TARRYTOWN, NY 10591-5488
SHAILESH R. NAIK, P.E.
NEW YORK LICENSE No. 072797-1

MEP ENGINEER
OLA Consulting Engineers
50 Broadway, Hawthorne, NY 10532
914.747.2800
8 West 38th Street, Suite 501 New York, NY 10018
646.849.4110
olace.com

NO.	REVISION/ISSUE	DATE
2	ISSUE FOR DOB COMMENT	04/26/2021
1	ISSUE FOR PERMIT	03/12/2021

SEAL
STATE OF NEW YORK SHAILESH RAMESH NAIK 072797 LICENSED PROFESSIONAL ENGINEER

PROJECT
LIBERTY PLAZA SUITES
500 COMMERCE ST.
TOWN OF MT. PLEASANT, NY

DATE:	APRIL 26, 2021
PROJECT NO:	1941
DRAWN BY:	LC
CHECKED BY:	MR
SCALE:	AS NOTED

DRAWING TITLE
STRUCTURAL DETAILS

SHEET NO.
S-014

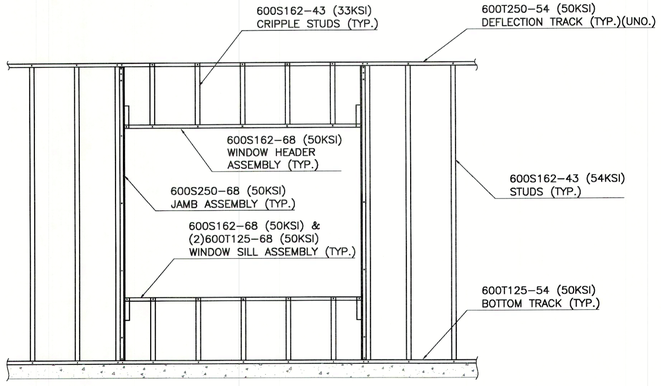

TYPICAL WINDOW FRAMING (U.N.O)
N.T.S

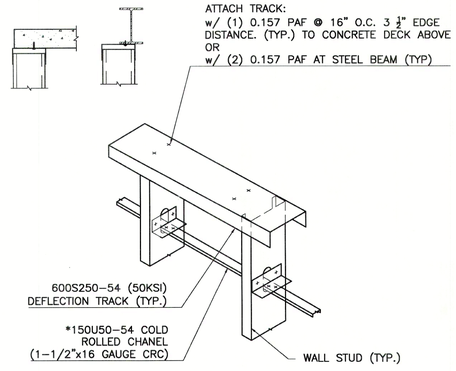

TYPICAL STUD BRACING AT DEFLECTION TRACK LOCATIONS
N.T.S

NOTE:
INSIDE DIMENSION OF OUTER TRACK TO BE ¼" MORE THAN STUD DEPTH.
*CURTAIN WALL STUD TO HAVE BRACING WITHIN 12" OF SLIP TRACK

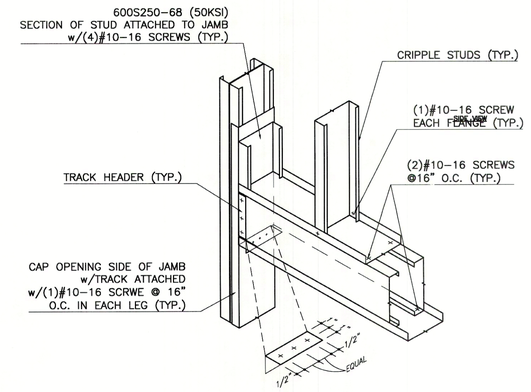

TYPICAL WINDOW HEADER DETAILS
N.T.S

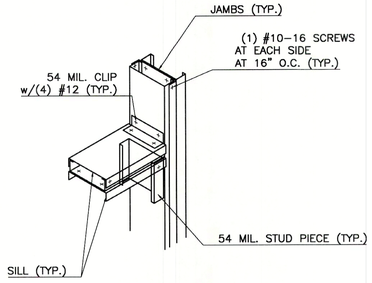

TYPICAL WINDOW SILL DETAILS
N.T.S

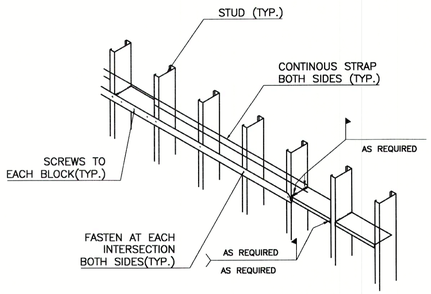

SOLID BLOCK & STRAP BRIDGING OPTION

TYPICAL EXTERIOR WALL BRACING
N.T.S

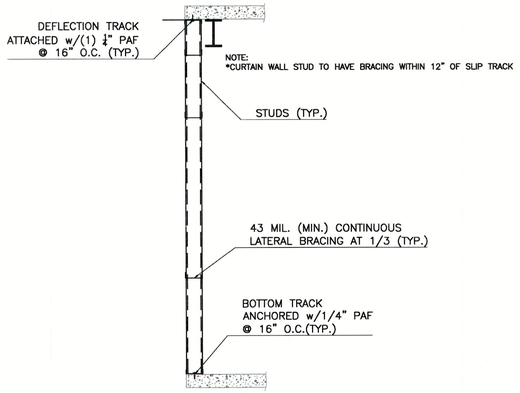

TYPICAL EXTERIOR NONLOAD BEARING WALL
N.T.S

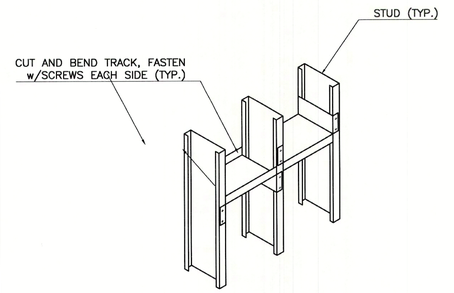

SOLID BLOCKING BRIDGING OPTION

TYPICAL EXTERIOR WALL BRACING
N.T.S

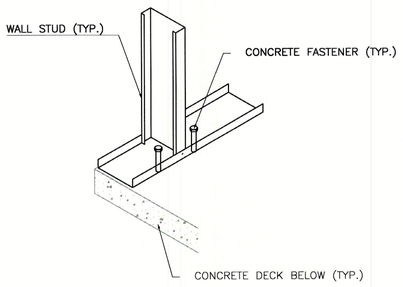

TYPICAL BOTTOM TRACK CONNECTION DETAIL
N.T.S

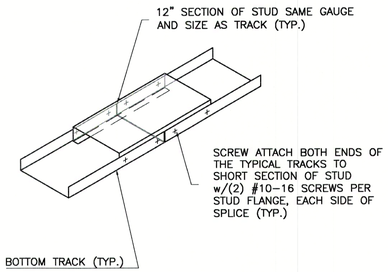

TYPICAL BOTTOM TRACK SPLICE DETAIL
N.T.S

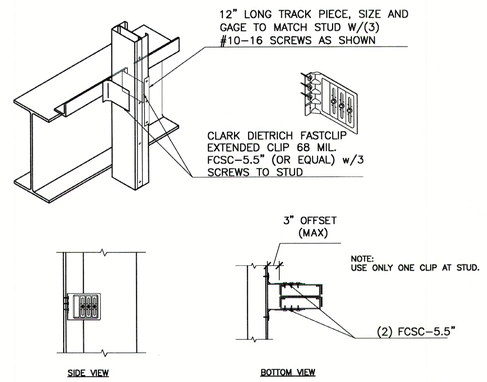

TYPICAL FCSC550 SLIDING CONNECTION DETAIL AT JAMBS
N.T.S

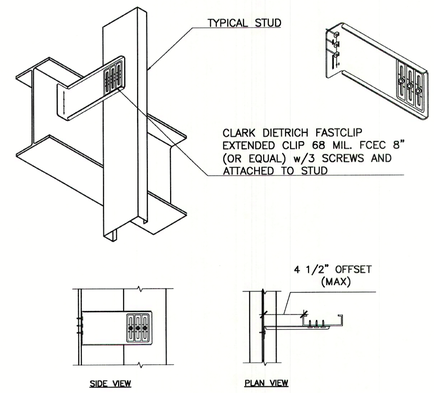

TYPICAL FCEC800 SLIDING CONNECTION DETAIL
N.T.S

LIBERTY PLAZA SUITES

500 COMMERCE STREET
HAWTHORNE, NY 10532

ARCHITECT
dimovski architecture P.L.L.C.
59 Kensico Road, Thornwood, NY 10594
(914) 747-3500 | (914) 747-3588 fax
www.dimovskiarchitecture.com

STRUCTURAL ENGINEER
CHARLES A. MANGANARO
CONSULTING ENGINEERS
A PROFESSIONAL CORPORATION
303 SOUTH BROADWAY, SUITE 223, TARRYTOWN, NY 10591-5488
SHAILESH R. NAIK, P.E.
NEW YORK LICENSE No. 072797-1

MEP ENGINEER
OLA Consulting Engineers
50 Broadway,
Hawthorne, NY 10532
914.747.2800
8 West 38th Street,
Suite 501
New York, NY 10018
646.849.4110
olace.com

NO.	REVISION/ISSUE	DATE
2	ISSUE FOR DOB COMMENT	04/26/2021
1	ISSUE FOR PERMIT	03/12/2021

SEAL
STATE OF NEW YORK
SHAILESH RAMESH NAIK
072797
LICENSED PROFESSIONAL ENGINEER

PROJECT
LIBERTY PLAZA SUITES
500 COMMERCE ST.
TOWN OF MT. PLEASANT, NY

DATE:	APRIL 26, 2021
PROJECT NO:	1941
DRAWN BY:	LC
CHECKED BY:	MR
SCALE:	AS NOTED

DRAWING TITLE
STRUCTURAL DETAILS

SHEET NO.
S-015

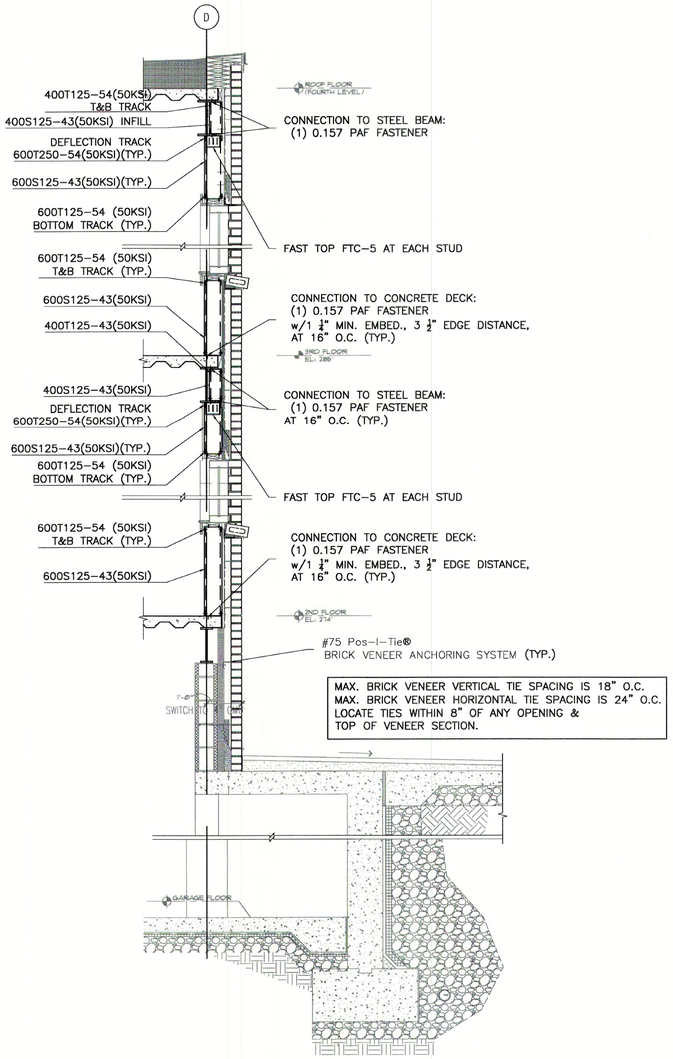

WALL DETAIL 1

AT COLUMN "D" REF: (2/A-300 & 1/A-350)
N.T.S

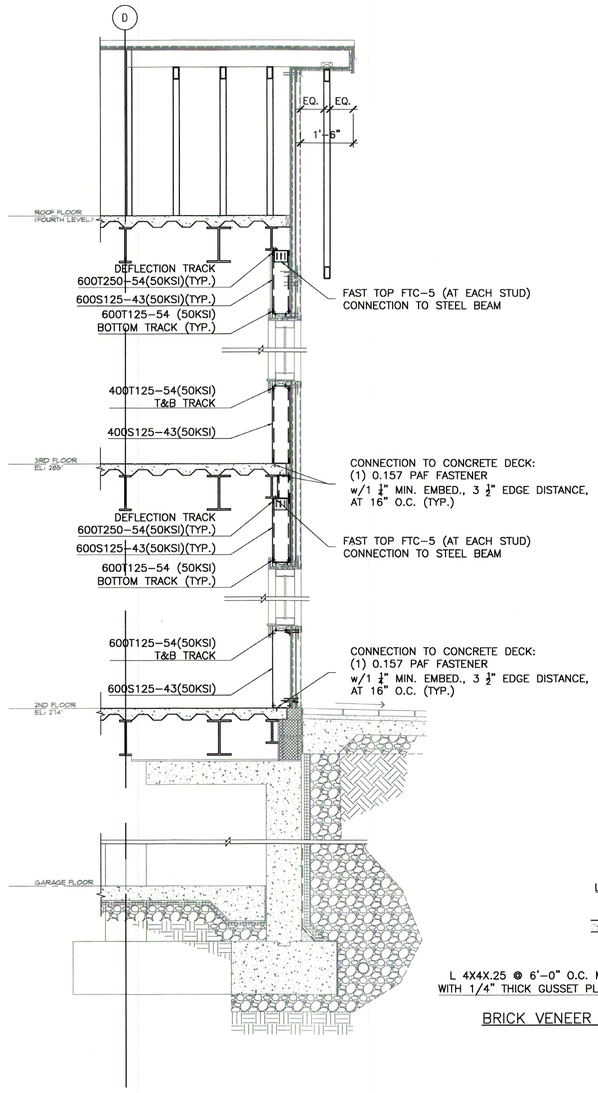

WALL DETAIL 2

AT COLUMN "D" REF: (2/A-300 & 2/A-350)
N.T.S

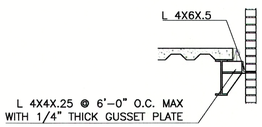

BRICK VENEER RELIEF LOAD @ EACH FLOOR
N.T.S

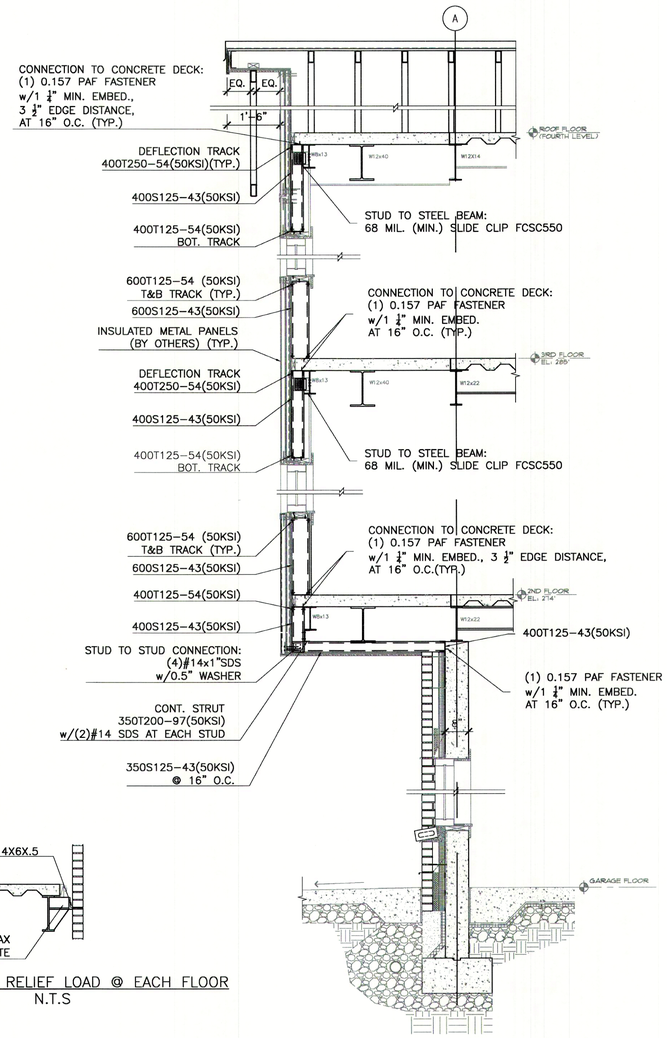

WALL DETAIL 3

AT COLUMN "A" REF: (3/A-300 & 3/A-350)
N.T.S

LIBERTY PLAZA SUITES

500 COMMERCE STREET
HAWTHORNE, NY 10532

ARCHITECT

dimovski architecture P.L.L.C.
59 Kensico Road, Thornwood, NY 10594
(914) 747-3500 | (914) 747-3588 fax
www.dimovskiarchitecture.com

STRUCTURAL ENGINEER

CHARLES A. MANGANARO CONSULTING ENGINEERS
A PROFESSIONAL CORPORATION
303 SOUTH BROADWAY, SUITE 223, TARRYTOWN, NY 10591-5488
SHAILESH R. NAIK, P.E.
NEW YORK LICENSE No. 072797-1

MEP ENGINEER

OLA Consulting Engineers
50 Broadway
Hawthorne, NY 10532
914.747.2800
8 West 38th Street,
Suite 501
New York, NY 10018
646.849.4110
olace.com

NO.	REVISION/ISSUE	DATE
2	ISSUE FOR DOB COMMENT	04/26/2021
1	ISSUE FOR PERMIT	03/12/2021

SEAL

STATE OF NEW YORK · SHAILESH RAMESH NAIK · 072797 · LICENSED PROFESSIONAL ENGINEER

PROJECT

LIBERTY PLAZA SUITES
500 COMMERCE ST.
TOWN OF MT. PLEASANT, NY

DATE:	APRIL 26, 2021
PROJECT NO:	1941
DRAWN BY:	LC
CHECKED BY:	MR
SCALE:	AS NOTED

DRAWING TITLE

STRUCTURAL SECTIONS

SHEET NO.

S-016

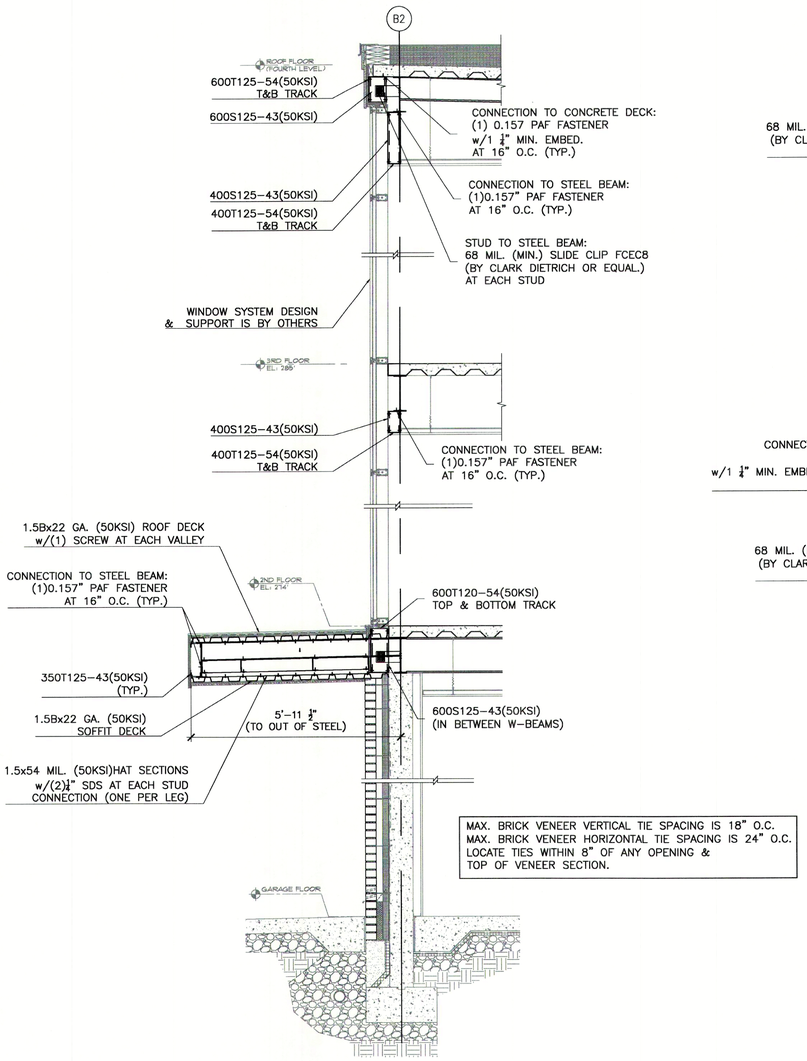

WALL DETAIL 4
N.T.S

AT FRONT DOOR ENTRY
REF: (4/A-300 & 1/A-351)

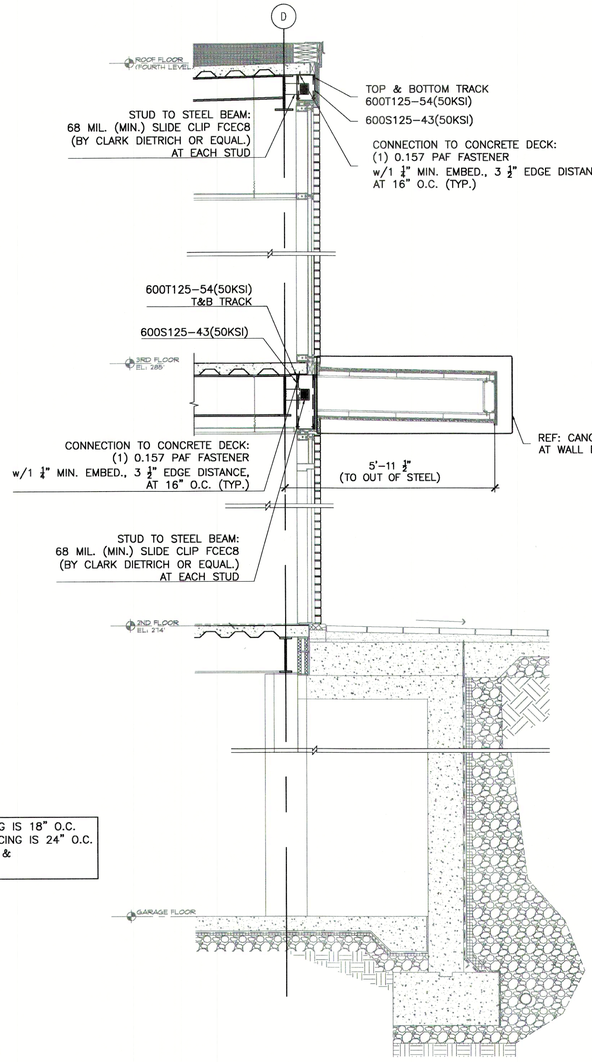

WALL DETAIL 5
N.T.S

AT GARAGE DOOR COLUMN "2"
REF: (4/A-300 & 2/A-351)

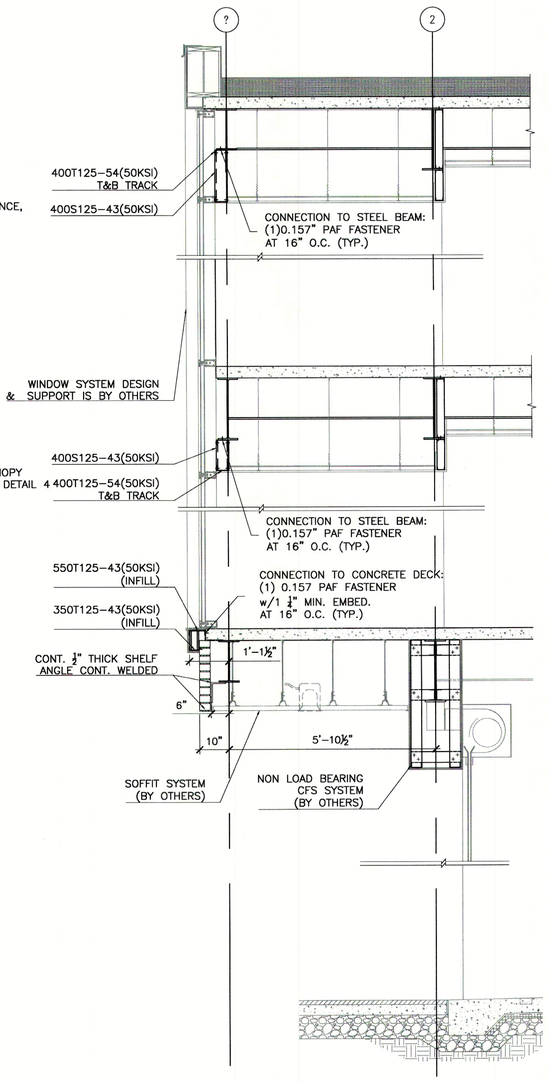

WALL DETAIL 6
N.T.S

AT GARAGE DOOR COLUMN "2"
REF: (1/A-300 & 3/A-351)

LIBERTY PLAZA SUITES

500 COMMERCE STREET
HAWTHORNE, NY 10532

ARCHITECT

dimovski architecture P.L.L.C.
59 Kensico Road, Thornwood, NY 10594
(914) 747-3500 | (914) 747-3588 fax
www.dimovskiarchitecture.com

STRUCTURAL ENGINEER

CHARLES A. MANGANARO CONSULTING ENGINEERS
A PROFESSIONAL CORPORATION
303 SOUTH BROADWAY, SUITE 223, TARRYTOWN, NY 10591-5488

SHAILESH R. NAIK, P.E.
NEW YORK LICENSE No. 072797-1

MEP ENGINEER

OLA Consulting Engineers
50 Broadway,
Hawthorne, NY 10532
914.747.2800
8 West 38th Street,
Suite 501
New York, NY 10018
646.849.4110
ola-ce.com

NO.	REVISION/ISSUE	DATE
2	ISSUE FOR DOB COMMENT	04/26/2021
1	ISSUE FOR PERMIT	03/12/2021

SEAL

STATE OF NEW YORK · SHAILESH RAMESH NAIK · 072797 · LICENSED PROFESSIONAL ENGINEER

PROJECT

LIBERTY PLAZA SUITES
500 COMMERCE ST.
TOWN OF MT. PLEASANT, NY

DATE:	APRIL 26, 2021
PROJECT NO:	1941
DRAWN BY:	LC
CHECKED BY:	MR
SCALE:	AS NOTED

DRAWING TITLE

STRUCTURAL SECTIONS

SHEET NO.

S-017

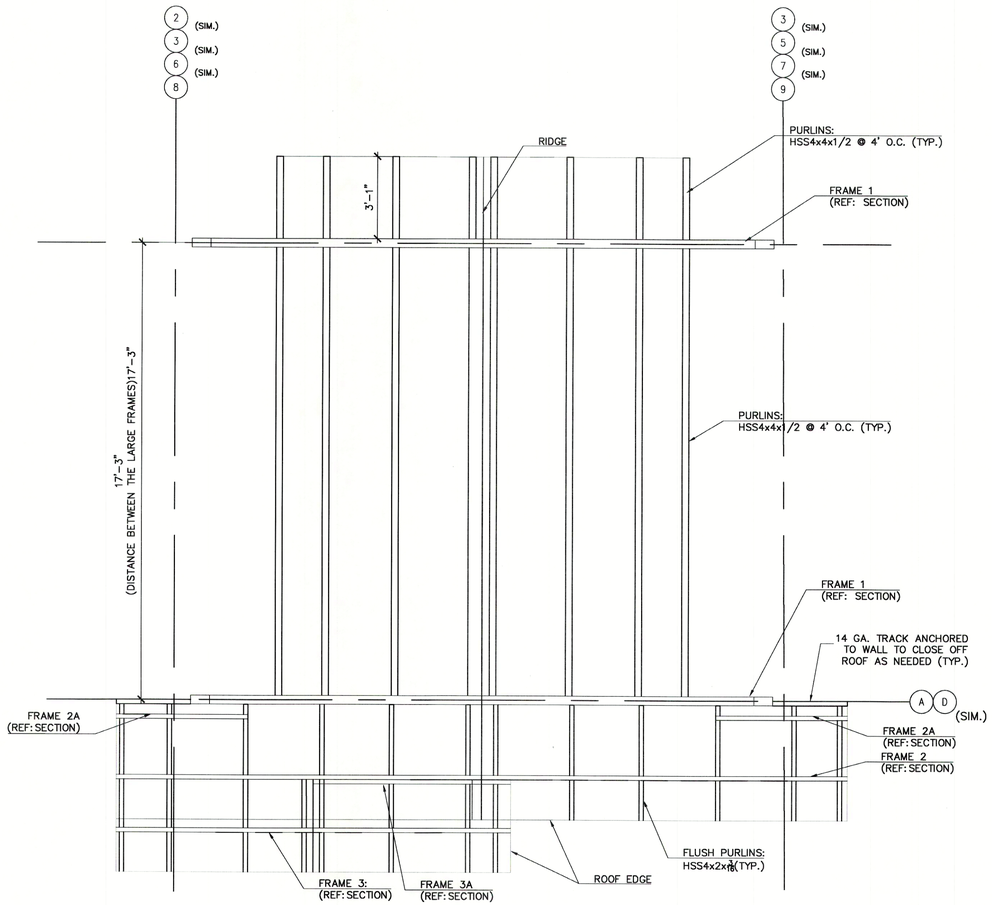

GABLE ROOF PLAN (TYP.)
SCALE: 3/8"= 1'-0"

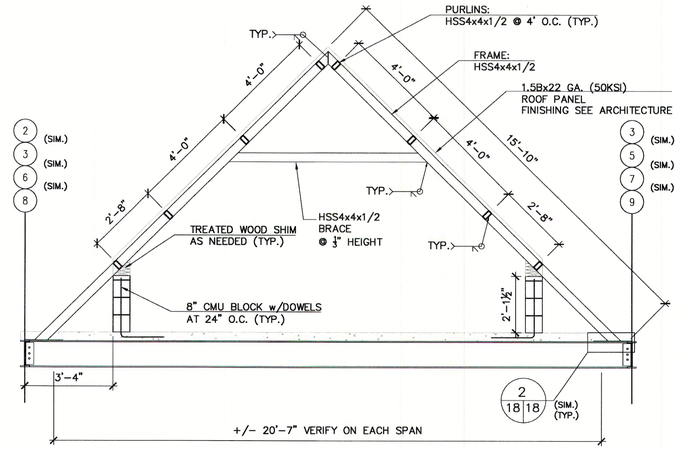

FRAME 1
HSS ROOF FRAMING AT GRIDLINES A,B,C & D(TYP.)
SCALE: 3/8"= 1'-0"

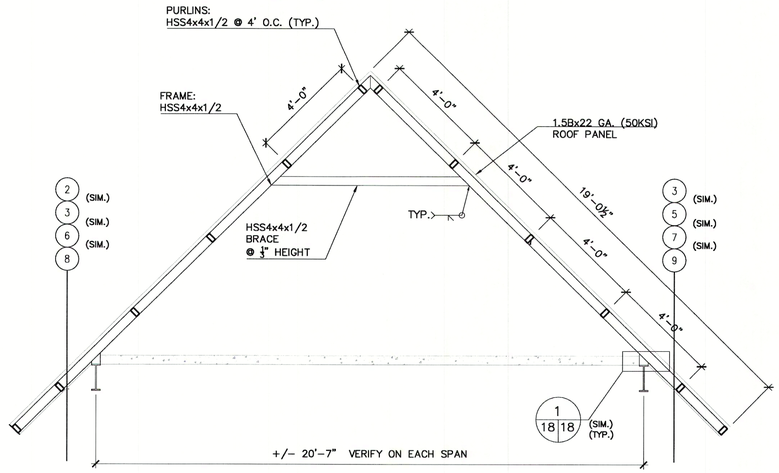

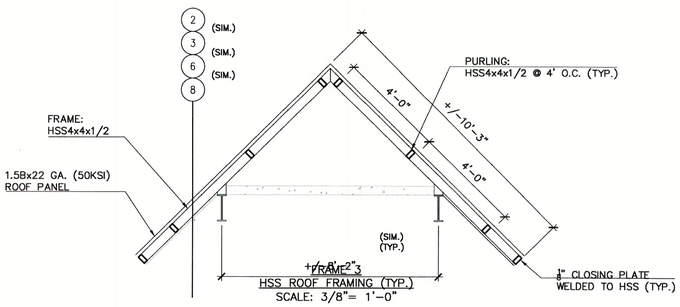

FRAME 2A
HSS ROOF FRAMING (TYP.)
SCALE: 3/8"= 1'-0"

FRAME 2
SCALE: 3/8"= 1'-0"

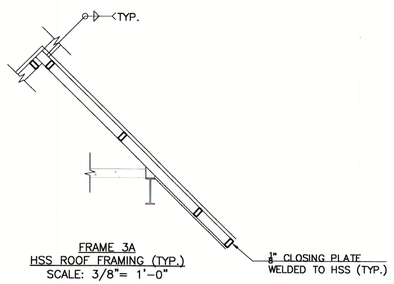

FRAME 3A
HSS ROOF FRAMING (TYP.)
SCALE: 3/8"= 1'-0"

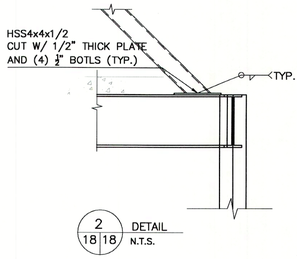

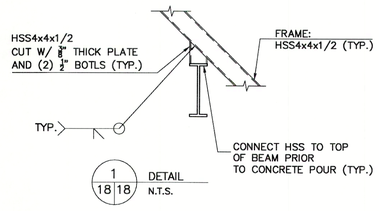

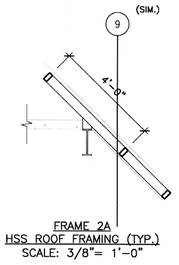

FRAME 2A
HSS ROOF FRAMING (TYP.)
SCALE: 3/8"= 1'-0"

LIBERTY PLAZA SUITES

500 COMMERCE STREET
HAWTHORNE, NY 10532

ARCHITECT
dimovski architecture P.L.L.C.
59 Kensico Road, Thornwood, NY 10594
(914) 747-3500 | (914) 747-3588 fax
www.dimovskiarchitecture.com

STRUCTURAL ENGINEER
CHARLES A. MANGANARO CONSULTING ENGINEERS
A PROFESSIONAL CORPORATION
303 SOUTH BROADWAY, SUITE 223, TARRYTOWN, NY 10591-5488
SHAILESH R. NAIK, P.E.
NEW YORK LICENSE No. 072797-1

MEP ENGINEER
OLA Consulting Engineers
50 Broadway, Hawthorne, NY 10532
914.747.2800
8 West 38th Street, Suite 501 New York, NY 10018
646.849.4110
ola-ce.com

NO.	REVISION/ISSUE	DATE
2	ISSUE FOR DOB COMMENT	04/26/2021
1	ISSUE FOR PERMIT	03/12/2021

SEAL
STATE OF NEW YORK · SHAILESH RAMESH NAIK · 072797 · LICENSED PROFESSIONAL ENGINEER

PROJECT
LIBERTY PLAZA SUITES
500 COMMERCE ST.
TOWN OF MT. PLEASANT, NY

DATE:	APRIL 26, 2021
PROJECT NO:	1941
DRAWN BY:	LC
CHECKED BY:	MR
SCALE:	AS NOTED

DRAWING TITLE
GABLE ROOF FRAMING

SHEET NO.
S-018

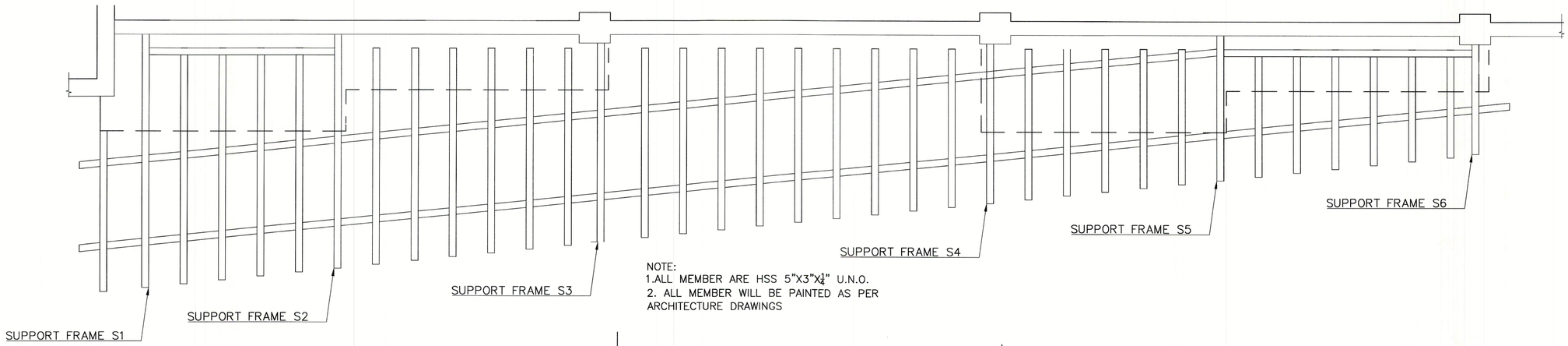

NOTE:
1.ALL MEMBER ARE HSS 5"X3"X¼" U.N.O.
2. ALL MEMBER WILL BE PAINTED AS PER ARCHITECTURE DRAWINGS

PERGOLA PLAN (TYP.)
SCALE: 3/8"= 1'-0"

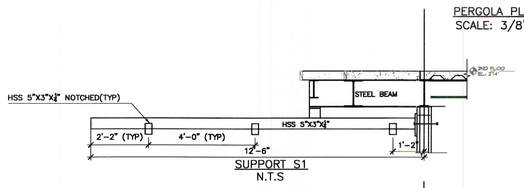

SUPPORT S1
N.T.S

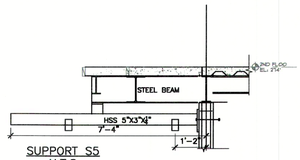

SUPPORT S5
N.T.S

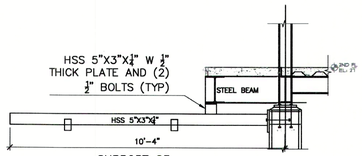

SUPPORT S3
N.T.S

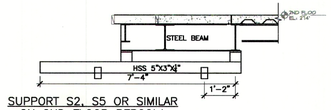

SUPPORT S2, S5 OR SIMILAR
ON 2ND FLOOR PERGOLA
N.T.S

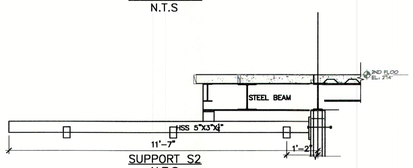

SUPPORT S2
N.T.S

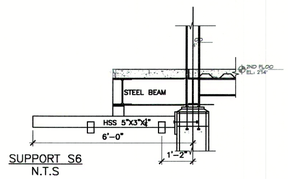

SUPPORT S6
N.T.S

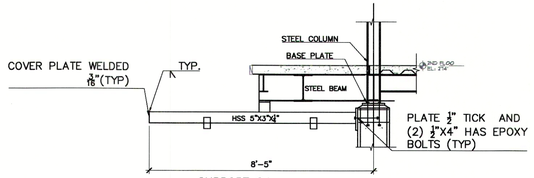

SUPPORT S4
N.T.S

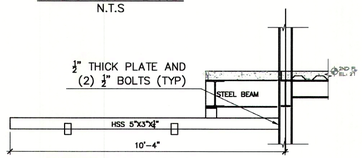

SUPPORT S1,S3,S4 OR SIMILAR
ON 2ND FLOOR PERGOLA
N.T.S

LIBERTY PLAZA SUITES

500 COMMERCE STREET
HAWTHORNE, NY 10532

ARCHITECT

dimovski architecture P.L.L.C.
59 Kensico Road, Thornwood, NY 10594
(914) 747-3500 | (914) 747-3588 fax
www.dimovskiarchitecture.com

STRUCTURAL ENGINEER

CHARLES A. MANGANARO
CONSULTING ENGINEERS
A PROFESSIONAL CORPORATION
303 SOUTH BROADWAY, SUITE 223, TARRYTOWN, NY 10591-5488

SHAILESH R. NAIK, P.E.
NEW YORK LICENSE No. 072797-1

MEP ENGINEER

OLA Consulting Engineers
50 Broadway,
Hawthorne, NY 10532
914.747.2800

8 West 38th Street,
Suite 501
New York, NY 10018
646.849.4110
olace.com

NO.	REVISION/ISSUE	DATE
2	ISSUE FOR DOB COMMENT	04/26/2021
1	ISSUE FOR PERMIT	03/12/2021

SEAL

STATE OF NEW YORK · SHAILESH RAMESH NAIK · 072797 · LICENSED PROFESSIONAL ENGINEER

PROJECT

LIBERTY PLAZA SUITES
500 COMMERCE ST.
TOWN OF MT. PLEASANT, NY

DATE:	APRIL 26, 2021
PROJECT NO:	1941
DRAWN BY:	LC
CHECKED BY:	MR
SCALE:	AS NOTED

DRAWING TITLE

PERGOLA DETAIL

SHEET NO.

S-019

SYMBOLS AND ABBREVIATIONS

SYMBOL	ABBREVIATION	DESCRIPTION
–	AC-	AIR CONDITIONING UNIT
–	AD	ACCESS DOOR
–	AFF	ABOVE FINISHED FLOOR
–	AHC	ABOVE HUNG CEILING
–	AP	ACCESS PANEL
–	BHP	BRAKE HORSEPOWER
–	BTU	BRITISH THERMAL UNIT
–	CFM	CUBIC FEET PER MINUTE
–	COD	CABLE OPERATED DAMPER
–	DB	DRY BULB TEMPERATURE
–	DIA. OR Ø	DIAMETER
–	DX	DIRECT EXPANSION
–	EA	EXHAUST AIR
–	EAT	ENTERING AIR TEMPERATURE
–	ER	EXHAUST REGISTER
–	ESP	EXTERNAL STATIC PRESSURE
–	EWT	ENTERING WATER TEMPERATURE
–	FCU	FAN COIL UNIT
–	FPM	FEET PER MINUTE
–	FPS	FEET PER SECOND
–	GPM	GALLONS PER MINUTE
–	HP	HORSE POWER
–	LAT	LEAVING AIR TEMPERATURE
–	LF	LINEAR FEET
–	LWT	LEAVING WATER TEMPERATURE
–	MBH	1000 BRITISH THERMAL UNITS PER HOUR
–	MER	MECHANICAL EQUIPMENT ROOM
–	NIC	NOT IN CONTRACT
–	OAI	OUTSIDE AIR INTAKE
–	PSI	POUNDS PER SQUARE INCH
–	RA	RETURN AIR
–	RF-	RETURN FAN
–	RPM	REVOLUTIONS PER MINUTE
–	SA	SUPPLY AIR
–	SP	STATIC PRESSURE
–	TD	TRANSFER DUCT
–	TF-	TRANSFER FAN
–	TSP	TOTAL STATIC PRESSURE
–	TYP.	TYPICAL
–	U.O.N.	UNLESS OTHERWISE NOTED
–	WB	WET BULB TEMPERATURE
–	WG	INCHES OF WATER GAUGE
———	NEW	NEW WORK
- - - - -	DEM.	EXISTING TO BE REMOVED
T	-	THERMOSTAT
	-	AIR INTO REGISTER
	-	POINT OF CONNECTION DISCONNECTION
	SR	SUPPLY REGISTER
	CD	1-WAY
CD		2-WAY
CD		2-WAY
CD		3-WAY
CD		4-WAY
RR/RG/ER		RETURN REGISTER/GRILLE/EXHAUST REGISTER
	-	SUPPLY DUCT UP
	-	SUPPLY DUCT DOWN

SYMBOLS AND ABBREVIATIONS

SYMBOL	ABBREVIATION	DESCRIPTION
	–	RETURN DUCT UP
	–	RETURN DUCT DOWN
	–	TRANSITION FROM SQUARE TO ROUND DUCT
	–	TRANSITION
D	–	DUCT DROP
R	–	DUCT RISE
	–	SQUARE VANED ELBOW
	–	DUCT RISE
	–	DUCT DROP
	–	DUCT TRANSITION
	–	ALUMINUM DUCT
	AL	ACOUSTIC LINING
	FD/AD	FIRE DAMPER W/ ACCESS DOOR
	SD/AD	SMOKE DAMPER W/ ACCESS DOOR
	CFSD	COMBINATION FIRE/SMOKE DAMPER W/ ACCESS DOOR
	VD	VOLUME DAMPER
	AL	ACOUSTIC LINING
6x8		DUCT SIZE - 1ST FIGURE IS SIDE SHOWN
	FC	FLEXIBLE CONNECTION
	–	ALUMINUM DUCT
RR CFM	–	EXHAUST REGISTER
SD-A CFM	–	NEW CEILING DIFFUSER
	CVD	CAR TYPE VOLUME DAMPER

GENERAL NOTES

1. DUCT DIMENSIONS SHOWN ON MECHANICAL DRAWINGS REFER TO INSIDE CLEAR DUCT DIMENSIONS. WHERE DUCTWORK IS LINED THE CONTRACTOR SHALL INCREASE THE SIZE OF DUCT TO COMPENSATE FOR LINING.
2. CONTRACTOR TO FIELD VERIFY ALL EXISTING CONDITIONS PRIOR TO THE BEGINNING OF WORK AND COORDINATE NEW WORK.
3. THE CONTRACTOR SHALL INSTALL FIRE DAMPERS WITH ACCESS DOORS IN ALL DUCTS PENETRATING FIRE RATED WALLS WHETHER SPECIFICALLY SHOWN ON THE DRAWING OR NOT.
4. PROVIDE ALL PIPE OPENINGS THROUGH PARTITIONS WITH PIPE SLEEVES. FOR PIPES PENETRATING FIRE RATED PARTITIONS, THE SPACE BETWEEN THE PIPE AND THE SLEEVE SHALL BE SEALED WITH FIRE STOPPING MATERIAL.
5. COORDINATE DUCTWORK, GRILLE, DIFFUSER AND REGISTER LOCATIONS WITH LIGHTS, ARCHITECTURAL ELEMENTS AND SHELVING.
6. THIS CONTRACTOR SHALL SUBMIT FOR REVIEW A COMPOSITE SHOP DRAWING, FULLY COORDINATED WITH ALL OTHER TRADES, INDICATING DUCTWORK, PLUMBING PIPING, SMOKE DETECTORS, LIGHTS, CONDUITS, DIFFUSERS, GRILLES, ETC.
7. CONTRACT DRAWINGS AS FAR AS THEY RELATE TO THE GENERAL ARRANGEMENT AND LOCATION OF EQUIPMENT, PIPING AND SHEETMETAL, SHALL BE UNDERSTOOD AS DIAGRAMMATIC. ANY CHANGES TO SHEETMETAL AND EQUIPMENT LOCATIONS NECESSARY TO AVOID INTERFERENCE WITH OTHER TRADES SHALL BE MADE AT NO EXTRA COST.
8. PROVIDE CABLE OPERATED DAMPERS ON DUCTWORK ABOVE DRYWALL CEILINGS WHEN LOCATED IN COMMON SPACES.
9. ALL RETURN DUCTWORK ENDING ABOVE HUNG CEILING TO HAVE ½"WMS.
10. SEE ARCHITECTURAL DRAWINGS FOR EXACT PHASING AND TIME SCHEDULE FOR CONSTRUCTION.
11. OWNER PROVIDED APPLIANCE REQUIREMENTS:
    - 11.1. ELECTRIC HOUSEHOLD RANGES SHALL BE LISTED AND LABELED IN ACCORDANCE WITH UL 858 AND BE LISTED AND LABELED AS HOUSEHOLD TYPE APPLIANCES FOR DOMESTIC USE. RANGES SHALL BE INSTALLED IN ACCORDANCE WITH THE MANUFACTURER'S INSTRUCTIONS.
    - 11.2. MICROWAVE COOKING APPLIANCES SHALL BE LISTED AND LABELED IN ACCORDANCE WITH UL 923 AND SHALL BE INSTALLED IN ACCORDANCE WITH THE MANUFACTURER'S INSTRUCTIONS.
    - 11.3. RESIDENTIAL ELECTRIC CLOTHES DRYERS SHALL BE LISTED AND LABELED IN ACCORDANCE WITH UL 2158 AND SHALL BE INSTALLED IN ACCORDANCE WITH THE MANUFACTURER'S INSTRUCTIONS .
    - 11.4. DOMESTIC ELECTRIC WATER HEATERS SHALL BE LISTED AND LABELED IN ACCORDANCE WITH UL 174 OR UL 1453 AND SHALL BE INSTALLED IN ACCORDANCE WITH THE MANUFACTURER'S INSTRUCTIONS

1

MECHANICAL PIPE MATERIAL SCHEDULE

PIPE SYSTEM	SIZE	PIPE			FITTINGS		
		MATERIAL	TYPE / WEIGHT	STANDARD	MATERIALS	TYPE / WEIGHT	STANDARD
CONDENSATE DRAIN	ALL	COPPER	HARD TEMPER TYPE L	ASTM B88	COPPER	WROUGHT COPPER SOLDER JOINT	ANSI 16.18
REFRIGERANT	ALL	COPPER	HARD TEMPER TYPE K (ACR)	ASTM 280	COPPER	SILVER SOLDER 300PSI	ANSI B16.22
NATURAL GAS	≤ 4"	STEEL	SCHEDULE 40	ASTM A53 ASTM A106	MALLEABLE IRON	THREADED	ASME B16.3
	> 4"	STEEL	SCHEDULE 40	ASTM A53 ASTM A106	MALLEABLE IRON	WELDED	ASME B16.3

NOTES:

LIBERTY PLAZA SUITES

500 COMMERCE STREET
HAWTHORNE, NY 10532

ARCHITECT

dimovskiarchitecture
59 Kensico Road, Thornwood, NY 10594
(914) 747-3500 | (914) 747-3588 fax
www.dimovskiarchitecture.com

STRUCTURAL ENGINEER

CHARLES A. MANGANARO CONSULTING ENGINEERS
A PROFESSIONAL CORPORATION
303 SOUTH BROADWAY, SUITE 223, TARRYTOWN, NY 10591–5488
SHAILESH R. NAIK, P.E.
NEW YORK LICENSE No. 072797-1

MEP ENGINEER

OLA Consulting Engineers
60 Broadway,
Hawthorne, NY 10532
914.747.2800
8 West 38th Street,
Suite 601
New York, NY 10018
646.649.4110
olaca.com

NO.	REVISION/ISSUE	DATE
1	DOB COMMENTS	04-26-2021
4	ISSUED FOR PRICING	03-16-2021
3	ISSUED FOR PERMIT	03-12-2021
2	ISSUED FOR PROGRESS 90%	03-05-2021
1.	ISSUED FOR PROGRESS	02-19-2021

SEAL

STATE OF NEW YORK · JOHN TORRE · LICENSED PROFESSIONAL ENGINEER · 071678

PROJECT

LIBERTY PLAZA SUITES
500 COMMERCE ST.
TOWN OF MT. PLEASANT, NY

DATE:	AUGUST 12, 2020
PROJECT NO:	NDIM0001.00
DRAWN BY:	HLD
CHECKED BY:	RJ
SCALE:	AS NOTED

DRAWING TITLE

MECHANICAL SCHEDULES SYMBOLS AND GENERAL NOTES

SHEET NO.

M0.1

SPECIFICATIONS

M-1 SCOPE OF WORK

A.) THE CONTRACTOR SHALL PROVIDE ALL MATERIALS, LABOR, EQUIPMENT, TOOLS, APPLIANCES, SERVICES, HOISTING, SCAFFOLDING, SUPERVISION AND OVERHEAD FOR THE FURNISHING AND INSTALLING OF ALL THE HEATING, VENTILATING AND AIR CONDITIONING AND RELATED WORK COMPLETE, IN ACCORDANCE WITH THE DRAWINGS, SCHEDULES AND SPECIFICATIONS, INCLUDING BUT NOT LIMITED TO THE FOLLOWING:

1. INSTALLATION AND/OR RELOCATION OF NEW DUCTWORK, RTU'S, FCU'S, AC UNITS, DIFFUSERS, REGISTERS, AND ASSOCIATED ACCESSORIES.
2. DUCTWORK INSULATION.
3. EXHAUST FAN ROOFTOP UNITS.
4. AUTOMATIC TEMPERATURE CONTROLS.
5. TESTING AND BALANCING.

M-2 WORK EXCLUDED

A.) THE FOLLOWING ITEMS ARE EXCLUDED FROM THIS SECTION OF WORK:

1.) MOUNTING AND POWER WIRING FOR ALL MOTOR STARTERS.

2.) ALL ELECTRIC POWER WIRING EXCEPT WHERE FURNISHED AS AN INTEGRAL PART OF FACTORY ASSEMBLED EQUIPMENT OR AS OTHERWISE REQUIRED FOR AUTOMATIC TEMPERATURE CONTROLS, VARIOUS SAFETY CONTROLS AND MOTOR INTERLOCKS.

M-3 GENERAL REQUIREMENTS

A.) CONSTRUCT ALL APPARATUS OF MATERIALS AND PRESSURE RATINGS SUITABLE FOR THE CONDITIONS ENCOUNTERED DURING CONTINUOUS OPERATION.

B.) WHERE CORROSION CAN OCCUR, APPROPRIATE CORROSION-RESISTANT MATERIALS AND ASSEMBLY METHODS SHALL BE USED, INCLUDING ISOLATION OF DISSIMILAR METALS AGAINST GALVANIC INTERACTION. RESISTANCE TO CORROSION SHALL BE ACHIEVED BY THE USE OF THE APPROPRIATE BASE MATERIALS COATINGS SHALL BE RESORTED TO ONLY WHEN SPECIFICALLY PERMITTED BY THE SPECIFICATIONS.

C.) CONSTRUCT ALL EQUIPMENT IN ACCORDANCE WITH REQUIREMENTS OF ALL APPLICABLE CODES. ALL PRESSURE VESSELS AND SAFETY DEVICES THAT FALL WITHIN THE SCOPE OF THE ASME CODE SHALL CONFORM TO THE CODE AND BEAR THE ASME LABEL OR STAMP.

D.) MATCH AND BALANCE ALL SYSTEM COMPONENTS TO ACHIEVE COMPATIBILITY OF EQUIPMENT FOR SATISFACTORY OPERATION AND PERFORMANCE THROUGHOUT THE ENTIRE OPERATING TEMPERATURE AND CONTROL RANGES. ALL INSTALLATIONS SHALL BE IN ACCORDANCE WITH MANUFACTURER'S RECOMMENDATIONS AND GUIDELINES.

E.) UPON COMPLETION OF WORK, THE ENTIRE MECHANICAL SYSTEM SHALL BE OPERATED IN THE PRESENCE OF THE OWNER TO DEMONSTRATE THAT ALL COMPONENTS ARE INSTALLED AND OPERATING PROPERLY.

F.) PROVIDE ALL CONTROLS, WIRING (EXCEPT POWER WIRING FOR MOTORS), PIPING, VALVES, ACCESSORIES AND OTHER COMPONENTS NECESSARY TO MAKE ALL SYSTEMS COMPLETE AND OPERABLE.

M-4 REMOVALS

A.) REMOVE AND DISPOSE OF ALL EQUIPMENT, DUCTWORK, PIPING, DIFFUSERS AND ACCESSORIES WITHIN THE PROJECT AREA AS SHOWN ON THE DRAWINGS OR AS REQUIRED FOR THE INSTALLATION OF THE WORK OF THIS PROJECT.

B.) THIS WORK SHALL BE EXECUTED IN AN ORDERLY AND CAREFUL MANNER, WITH DUE CONSIDERATION FOR THE PROTECTION OF ADJACENT ACTIVITIES. DUST PRODUCING DEMOLITION SHALL BE ISOLATED WITH PROPER PRECAUTIONS.

C.) THE CONTRACTOR SHALL ASK THE OWNER FOR INSTRUCTIONS IF HE/SHE ENCOUNTERS DEMOLITION WORK WHICH MIGHT RESULT IN A HAZARDOUS CONDITION.

D.) MECHANICAL DEMOLITION INDICATED ON THE DRAWING IS ACCORDING TO THE BEST INFORMATION AVAILABLE. CONTRACTOR SHALL VERIFY ALL DEMOLITION WORK WITHIN THE AREA AND SHALL CONDUCT REMOVALS, AS REQUIRED, OR AS INSTRUCTED BY THE OWNER.

M-5 DUST PROTECTION

A.) IT IS IMPERATIVE THAT DURING DEMOLITION, AND ALSO DURING NORMAL CONSTRUCTION, WHERE THERE IS ANY POSSIBILITY OF DUST DUE TO CONSTRUCTION WORK CONTAMINATING THE OWNER'S EQUIPMENT OR CAUSING A NUISANCE TO PERSONNEL, THIS CONTRACTOR SHALL FURNISH AND INSTALL SUITABLE PROTECTION AS REQUIRED.

B.) WHEREVER POLYETHYLENE IS USED AS PROTECTIVE TARPAULINS OR DROPCLOTH, IT SHALL BE FIRE-RETARDANT POLYETHYLENE SHEETING, .004" THICK.

M-6 TIME AND MANNER

A.) ALL WORK SHALL BE PERFORMED DURING NORMAL WORKING HOURS UNLESS OTHERWISE DIRECTED BY THE OWNERS REPRESENTATIVE.

B.) PRIOR TO THE BEGINNING OF WORK THE CONTRACTOR SHALL SUBMIT A SCHEDULE OF WORK TO THE OWNER. ANY SHUTDOWNS OF EXISTING EQUIPMENT AND/OR SYSTEMS SHALL BE VERIFIED IN WRITING WITH THE OWNER'S REPRESENTATIVE.

C.) ANY SHUT-DOWN OF EXISTING SYSTEMS WHERE SUCH SHUT-DOWN IS REQUIRED FOR THE PERFORMANCE OF THE WORK UNDER THE CONTRACT SHALL BE AT SUCH TIMES AS DESIGNATED BY OWNER'S REPRESENTATIVE. RESTORE SYSTEMS TO ORIGINAL CONDITION AFTER PERFORMANCE WORK. THE INTENT IS TO INSURE MINIMUM INTERFERENCE WITH OPERATION OF EXISTING FACILITIES. REPAIR ANY DAMAGE DONE TO BUILDING RESULTING FROM INSTALLATION OF NEW WORK.

M-7 SITE INSPECTION

A.) VISIT SITE BEFORE SUBMITTING BID. INSPECT AND VERIFY ALL CONDITIONS WHICH MAY AFFECT COST OF INSTALLATION. VERIFY EXACT LOCATION OF ALL EXISTING PIPES, DUCTS, BEAMS, ETC., WHETHER SHOWN ON THE DRAWINGS OR NOT, SO FAR AS THESE LOCATIONS RELATE TO THE NEW WORK. PROVIDE ANY OFFSETS IN NEW PIPING OR DUCTS AS MAY BE REQUIRED FOR PROPER CLEARANCES TO AVOID EXISTING DUCTS, CABLES OR OTHER OBSTRUCTION.

M-8 RUBBISH REMOVAL

A.) EQUIPMENT, DUCTWORK, ETC., SPECIFIED TO BE REMOVED AND RUBBISH CAUSED BY CONSTRUCTION SHALL BE REMOVED FROM THE CONSTRUCTION SITE.

M-9 CUTTING AND PATCHING

A.) THE CONTRACTOR SHALL PROVIDE ALL CUTTING REQUIRED FOR DUCTS, PIPING AND CONTROL CONDUITS PASSING THROUGH WALLS, FLOORS, ETC.

B.) PENETRATIONS FOR PIPING SHALL BE MADE BY CORE DRILLING WHENEVER POSSIBLE.

C.) PATCHING SHALL BE PROVIDED BY THE GENERAL CONTRACTOR EXCEPT WHERE DAMAGE AND/OR REPAIRS ARE NECESSITATED DUE TO ERROR OR NEGLIGENCE ON THE PART OF THIS CONTRACTOR OR HIS SUB-CONTRACTORS.

M-10 SHOP DRAWINGS AND SUBMITTALS REQUIRED

A.) MANUFACTURER'S DATA OR SHOP DRAWINGS OF THE FOLLOWING APPARATUS GIVING FULL INFORMATION AS TO CATALOG NUMBERS, DIMENSIONS, MATERIALS AND ALL INFORMATION PERTINENT TO THE ADEQUACY OF THE SUBMITTED EQUIPMENT SHALL BE SUBMITTED FOR REVIEW:

1.) SHEET METAL CONSTRUCTION DETAILS.
2.) DUCTWORK LAYOUTS (⅜" SCALE).
3.) ROOFTOP UNITS
4.) AUTOMATIC TEMPERATURE CONTROLS INCLUDING WIRING DIAGRAMS.
5.) BALANCING REPORTS.
6.) FIRE DAMPERS
7.) AIR OUTLETS AND REGISTERS.
8.) HANGERS AND INSERTS.
9.) INSULATION.
10.) EXHAUST FAN ROOFTOP UNITS.
11.) HEAT PUMP UNITS.

M-11 TESTING AND BALANCING

A.) THE CONTRACTOR SHALL ENGAGE THE SERVICES OF AN INDEPENDENT AIR BALANCING FIRM THAT SHALL BE SUBJECT TO THE REVIEW OF THE ENGINEER. THE BALANCING FIRM SHALL HAVE AT LEAST ONE MEMBER OF ITS FULL TIME STAFF WHO IS A LICENSED PROFESSIONAL ENGINEER WHO SHALL SUPERVISE THE BALANCING WORK.

B.) THE TESTING AGENCY SHALL BE FULLY CERTIFIED BY THE ASSOCIATED BALANCE COUNCIL OR AN EQUIVALENT ORGANIZATION AND SHALL HAVE AT LEAST ONE MEMBER OF THE AGENCY QUALIFIED AS A CERTIFIED TEST AND BALANCE ENGINEER THAT HAS BEEN ISSUED THIS CERTIFICATION. ALL FINAL REPORTS SHALL BE SIGNED BY THIS CERTIFIED TEST AND BALANCE ENGINEER AND SHALL INCLUDE HIS OFFICIAL STAMP. SUBMIT FOUR (4) COPIES OF REPORT FOR REVIEW. BOTH A PRELIMINARY AND FINAL BALANCING REPORT SHALL BE SUBMITTED.

C.) SUPPLY ALL LABOR, MATERIALS, INSTRUMENTS, ETC., REQUIRED FOR TESTING. REPAIR ALL DAMAGE TO PIPING OR EQUIPMENT WHICH OCCURS AS A RESULT OF TESTING. PLUG ALL HOLES IN DUCTS MADE FOR RAVERSE PURPOSES WITH APPROPRIATE SNAP-IN PLUGS. DUCT TAPE IS NOT ACCEPTABLE.

D.) AIR BALANCE:

1.) ALL FANS AND DUCT SYSTEMS SERVING THE BUILDING SHALL BE COMPLETELY BALANCED BY THE ADJUSTMENT OF SHEAVES, DAMPERS, AND OTHER VOLUME AND DIVERTING CONTROL DEVICES, TO OBTAIN THE AIR QUANTITIES REQUIRED.

2.) THE CONTRACTOR SHALL IMMEDIATELY NOTIFY THE ENGINEER OF ANY CONDITION WHICH PREVENTS THE ADJUSTMENT OF THE EQUIPMENT TO DELIVER THE INDICATED DESIGN AIR QUANTITIES.

3.) SUBMIT SINGLE LINE DIAGRAMS OF ALL FAN SYSTEMS INDICATING OUTSIDE AIR INTAKE AND DISCHARGE DUCTS IDENTIFIED BY UNIT NUMBER.

4.) RECORD THE FOLLOWING TEST DATA FOR ALL FANS AND FAN MOTORS INSTALLED AT THE PROJECT AT FINAL BALANCED CONDITIONS:

a. FAN SPEED (RPM).
b. FAN STATIC PRESSURE (EXTERNAL AND TOTAL).
c. MOTOR OPERATING AMPS.
d. ACTUAL VOLTAGE.
e. FAN CFM.

E.) PIPE TESTS:

1.) ALL PIPING SHALL BE TESTED AS HEREINAFTER SPECIFIED. TESTS SHALL BE MADE AFTER ERECTION AND BEFORE COVERING IS APPLIED OR PIPING PAINTED OR CONCEALED AND AS SECTIONS OF MAINS AND GROUPS OR RISERS ARE COMPLETED. WHERE CONTROLS AND ACCESSORIES ARE NOT DESIGNED TO WITHSTAND PIPE TEST PRESSURES, THEY SHALL BE PROPERLY PROTECTED AGAINST DAMAGE DURING SUCH TESTS. ALL PIPING SHALL BE SUBJECTED TO A HYDROSTATIC TEST FOR A PERIOD OF TWO (2) HOURS WITHOUT FALL IN THE PRESSURE GAUGE READING.

2.) ALL PIPING SHALL BE TESTED TO A MINIMUM OF 1.5 TIMES THE SYSTEM WORKING PRESSURE WITH A MINIMUM OF 150 PSIG FOR WATER PIPING AND 100 PSIG FOR ALL OTHER PIPING.

M-12 DUCTWORK - GENERAL REQUIREMENTS

A.) ALL LABOR, MATERIALS, EQUIPMENT AND SERVICES SHALL BE PROVIDED AND ALL OPERATIONS REQUIRED FOR COMPLETE INSTALLATION OF THE DUCTWORK, DAMPERS AND ALL AUXILIARY WORK OF ANY KIND, NECESSARY TO MAKE THE SYSTEM COMPLETE AND READY FOR SATISFACTORY OPERATION SHALL BE PERFORMED.

B.) CONSTRUCT ALL EQUIPMENT IN ACCORDANCE WITH REQUIREMENTS OF ALL APPLICABLE CODES.

C.) ALL INSTALLATIONS SHALL BE IN ACCORDANCE WITH MANUFACTURERS RECOMMENDATIONS AND REQUIREMENTS OF APPLICABLE CODES.

D.) INSTALL DUCTS AND HANGERS PLUMB AND LEVEL WITH JOINTS SQUARE AND DEVOID OF SHARP EDGES. ROUTE DUCTWORK TO MINIMIZE DIRECTIONAL CHANGES AND ABRUPT TRANSITIONS. PROVIDE ADEQUATE SPACE AROUND DUCTS TO ASSURE PROPER SUPPORT AND TO ALLOW THE INSTALLATION OF THE INSULATION SPECIFIED. INSTALL VOLUME DAMPERS AT BRANCHES CONNECTED INTO THE MAIN DUCT.

M-13 DUCT CONSTRUCTION REQUIREMENTS

A.) CONSTRUCT AND SUPPORT ALL DUCTWORK IN ACCORDANCE WITH THE LATEST STANDARDS OF ASHRAE AND THE SHEET METAL AND AIR CONDITIONING CONTRACTORS NATIONAL ASSOCIATION. ALL WORK, MATERIALS AND EQUIPMENT SHALL COMPLY WITH THE LATEST REQUIREMENTS OF NFPA 90A AND THE LOCAL AUTHORITIES HAVING JURISDICTION.

B.) ALL LOW PRESSURE DUCTWORK SHALL BE MADE OF BEST BLOOM GALVANIZED IRON OF THE FOLLOWING U.S. STANDARD GAUGES:

NO. 24	UP TO 30 INCHES MAXIMUM DIMENSION
NO. 22	30 INCHES TO 54 INCHES
NO. 20	55 INCHES TO 84 INCHES
NO. 18	85 INCHES AND OVER

C.) NO DUCT SHALL BE LESS THAN 24 GAUGE.

D.) BRACING, GAUGES AND SUPPORTS INDICATED IN SMACNA MANUALS ARE THE MINIMUM ACCEPTABLE. ADDITIONAL BRACING OR SUPPORTS SHALL BE INSTALLED TO ELIMINATE ANY DISTORTION OR VIBRATION WHEN THE SYSTEMS ARE OPERATING OR UNDER TESTS.

E.) ALL LONGITUDINAL SEAMS SHALL BE PITTSBURGH TYPE SEAMS LOCATED AT THE CORNERS.

F.) DUCT SEALANT SHALL BE 3M CO. TYPE EC-800 SEALING COMPOUND OR EQUIVALENT.

M-14 HANGERS AND SUPPORTS

A.) GENERAL:

1.) PROVIDE HANGERS AND SUPPORTS TO SUPPORT THE WEIGHT OF DUCTS AND ASSOCIATED EQUIPMENT WITHIN THE DUCT RUN. FASTEN HANGERS AND SUPPORTS TO CONCRETE STRUCTURE BY INSERTS OR EXPANSION ANCHORS.

B.) HORIZONTAL DUCTWORK:

1.) FOR DUCTS WITH A CROSS-SECTIONAL AREA OF 2 FT² OR LESS, HANGERS SHALL BE CONSTRUCTED OF AT LEAST 1" BY 1/16" STEEL STRAP. FOR DUCTS WITH A CROSS-SECTIONAL AREA OF OVER 2 FT² HANGERS SHALL BE CONSTRUCTED OF AT LEAST 1" BY ⅛" STEEL STRAP.

2.) FOR DUCTS WITH A CROSS-SECTIONAL AREA OF 4 FT² OR LESS, HANGERS SHALL BE NO MORE THAN 8 FT APART; FOR DUCTS WITH A CROSS-SECTIONAL AREA OF MORE THAN 4 FT² BUT NOT OVER 10 FT² HANGERS SHALL BE NO MORE THAN 6 FT APART, AND FOR DUCT WITH A CROSS-SECTIONAL AREA OF MORE THAN 10 FT² HANGERS SHALL BE NO MORE THAN 4 FT. APART. THE DISTANCES BETWEEN HANGERS SHALL BE MEASURED LINEARLY ALONG THE DUCT.

3.) STRAP HANGERS SHALL BE FASTENED TO DUCT WITH SHEET METAL SCREWS ON 2" CENTERS WITH NOT LESS THAN 2 PER VERTICAL SIDE. FOR DUCTS OVER 48" WIDE, STRAP HANGERS SHALL BE EXTENDED AROUND BOTTOM DUCT NOT LESS THAN 2" FROM EACH EDGE WITH AT LEAST ONE SHEET METAL SCREW PER LEG.

M-15 TURNING VANES

A.) PROVIDE APPROVED TURNING VANES IN ALL 90 DEGREE SQUARE ELBOWS OF DOUBLE VANE CONSTRUCTION, OF THE SAME MATERIAL AS THE DUCTS IN WHICH THEY ARE INSTALLED.

M-16 ACCESS DOORS IN SHEET METAL

A.) DOORS IN DUCTWORK SHALL BE PROVIDED FOR ACCESS TO ALL APPARATUS, ACCESSORIES, AUTOMATIC CONTROLS, VALVES, AUTOMATIC DAMPERS AND DAMPER MOTORS, SMOKE DETECTORS, AND ALL OTHER AREAS AND EQUIPMENT REQUIRING PERIODIC INSPECTION OR SERVICE.

B.) UNLESS OTHERWISE INDICATED, ACCESS DOORS IN DUCTS SHALL BE 20"x20". FOR DUCTS LESS THAN 24", THE DOOR SHALL BE A MINIMUM OF 12" LONG AND 2" SMALLER THAN THE DUCT WIDTH/HEIGHT DIMENSION, DEPENDING ON LOCATION.

C.) ACCESS DOORS SHALL BE CONSTRUCTED OF THE SAME MATERIALS AND INSTALLED TO WITHSTAND THE SAME TEST PRESSURES WITHOUT DEFORMATION, VIBRATION OR LEAKAGE AS THE DUCTWORK IN WHICH THEY ARE PROVIDED. DOORS INSTALLED IN INSULATED DUCTWORK SHALL BE OF THE DOUBLE INSULATED, REINFORCED PANEL TYPE WITH MINIMUM 18 GAUGE SHEET METAL. ACCESS DOORS IN UN-INSULATED DUCTWORK MAY BE SINGLE PANEL CONSTRUCTION OF NOT LESS THAN 18 GAUGE SHEET METAL. ALL ACCESS DOORS SHALL HAVE HINGES, LOCKING DEVICES, AND RUBBER GASKETS AROUND THE PERIMETER.

D.) DOORS SHALL BE FIT CLOSELY. ROUND SOFT RUBBER GASKETING SHALL BE SECURELY ATTACHED TO THE DOORS BY CEMENT AND RIVETS SHALL BE COUNTERSUNK FOR A CONTINUOUS AIRTIGHT SEAL.

M-17 DAMPERS

A.) PROVIDE VOLUME DAMPERS FOR NEW DUCT SYSTEMS IN EACH BRANCH DUCT, WHERE INDICATED, AND WHERE REQUIRED TO ACCOMPLISH AIR BALANCE. VOLUME DAMPERS TO BE FABRICATED WITH 16 GAUGE GALVANIZED STEEL WITH INTERLOCKING BLADES AND HEMMED EDGES SET IN A GALVANIZED STEEL FRAME. PROVIDE SINGLE BLADE BUTTERFLY TYPE DAMPERS WITH MAXIMUM ASSEMBLY LENGTH OF 48 INCHES. FOR LONGER LENGTHS USE MULTIPLE ASSEMBLIES INSTALLED SIDE BY SIDE.

B.) U.L. APPROVED FIRE DAMPERS SHALL BE INSTALLED IN ALL DUCTS PIERCING FIRE RATED WALLS, FLOORS OR CEILINGS WHETHER SPECIFICALLY INDICATED ON DRAWINGS OR NOT; EXCEPT FOR KITCHEN EXHAUST DUCTS. DAMPERS SHALL BE INSTALLED IN CONFORMANCE WITH NFPA-90A AND LOCAL CODES. FIRE DAMPERS SHALL BE SHUTTER TYPE WITH MINIMUM 1½ HOUR RATING IN ACCORDANCE WITH NFPA 252. DAMPER SHALL BE RUSKIN OR AS APPROVED. FIRE DAMPER SHALL COMPLY WITH REQUIREMENTS OF UL 555.

M-18 FLEXIBLE CONNECTIONS

A.) FOR AIR OUTLETS PROVIDE INLET CONNECTIONS OF NEOPRENE COATED AND IMPREGNATED FIBERGLASS CLOTH REINFORCED WITH CONTINUOUS GALVANIZED WIRE HELIX AND PREINSULATED WITH 1¼" THICK FIBERGLASS COVERED WITH REINFORCED ALUMINUM FOIL, FLEXIBLE TUBING CORP., "THERMALFLEX" TYPE M-KN (TEMPERATURE RANGE 0-250°F). CUT BACK INSULATION 4" FROM EACH END. SEAL ALL INSULATION ENDS AND JOINTS VAPORTIGHT. LIMIT THE FLEXIBLE CONNECTION LENGTH TO FOUR FEET MAXIMUM. SECURELY FASTEN THE FLEXIBLE RUNOUTS TO THE DUCTWORK. SLIP THE FLEXIBLE CONNECTION OVER A 4" LONG MATCHING SHEET METAL SLEEVE OR FITTING IN THE DUCT PREPARED WITH SEALING COMPOUND. CLAMP THE FLEXIBLE RUNOUT SECURELY TO THE DUCT WITH A 1" WIDE, 18 GAUGE GALVANIZED STEEL, BOLTED CLAMPING COLLAR. REINFORCE THE JOINT WITH SHEET METAL SCREWS AND SEALING COMPOUND.

B.) FAN, CV AND VAV BOX INLET AND DISCHARGE CONNECTIONS SHALL BE MADE WITH FLEXIBLE MATERIAL SO AS TO PROHIBIT THE TRANSFER OF VIBRATION FROM FANS TO DUCTWORK. CONNECTIONS SHALL BE MADE OF HEAVY VINYL AND NEOPRENE CLOTH. THE FLEXIBLE CONNECTIONS SHALL BE APPROXIMATELY 6" LONG AND HELD IN PLACE WITH HEAVY METAL BANDS OR DOUBLE HEMLOCK SECURELY ATTACHED TO PREVENT ANY LEAKAGE AT THE CONNECTION POINTS.

M-19 INSULATION - GENERAL REQUIREMENTS

A.) ALL LABOR, MATERIALS, EQUIPMENT AND SERVICES, SHALL BE PROVIDED. ALL OPERATIONS REQUIRED FOR COMPLETE INSTALLATION OF INSULATION AND RELATED WORK AS INDICATED ON THE DRAWING, OR SPECIFIED HEREIN, SHALL BE PERFORMED. THE EXECUTION OF THE WORK SHALL BE IN STRICT ACCORDANCE WITH THE INSULATION MANUFACTURER'S RECOMMENDATIONS AND THE BEST PRACTICE OF THE TRADE.

B.) NO INSULATION SHALL BE APPLIED UNTIL ALL TESTS HAVE BEEN COMPLETED. ONLY INSULATION AND FINISH MATERIALS INCLUDING ADHESIVES, CEMENTS AND MASTICS WHICH CONFORM TO THE REQUIREMENTS OF ALL GOVERNING CODES AND ORDINANCES SHALL BE USED.

C.) ANY EXISTING INSULATION AND SURFACE FINISH DISTURBED OR DAMAGED BY THE INSTALLATION OF NEW EQUIPMENT OR OTHER ALTERATIONS TO THE SYSTEM SHALL BE REPAIRED OR REPLACED TO THE SATISFACTION OF THE ENGINEER.

M-20 DUCT INSULATION

A.) THE CONTRACTOR SHALL NOTE THAT ALL NEW AND EXISTING DUCTWORK THAT IS NOT ALREADY INSULATED SHALL BE INSULATED AS PART OF THIS PROJECT.

B.) COVERINGS AND LININGS INCLUDING ADHESIVES WHERE USED, SHALL HAVE A FLAME SPREAD INDEX NOT MORE THAN 25 AND A SMOKE DEVELOPED INDEX NOT MORE THAN 50 WHEN TESTED IN ACCORDANCE WITH ASTM E 84 OR UL 723, USING THE SPECIMEN PREPARATION AND MOUNTING PROCEDURES OF ASTM E2231.

C.) ALL CONCEALED AIR CONDITIONING SUPPLY AND RETURN DUCTWORK, INCLUDING SUPPLY AND RETURN DUCTWORK RUNNING THROUGH RETURN AIR PLENUM ABOVE HUNG CEILING, SHALL BE COVERED WITH WITH 1½" THICK R-6 FLEXIBLE FIBROUS GLASS BLANKET, MINIMUM DENSITY 1½ POUNDS PER CUBIC FOOT, MAXIMUM K-FACTOR: 0.27 AT 75°F MEAN TEMPERATURE, TEMPERATURE RANGE: 40°F TO 250°F FACTORY APPLIED VAPOR BARRIER FACING OF MINIMUM 0.7 MIL ALUMINUM FOIL LAMINATED TO FIRE RESISTANT KRAFT PAPER AND REINFORCED WITH GLASS FIBERS: 0.02 PERMEABILITY.

D.) ALL DUCTWORK EXPOSED TO VIEW IN MECHANICAL ROOMS, WHICH IS NOT INTERNALLY INSULATED, SHALL BE COVERED WITH 1½" THICK RIGID BOARD TYPE MINERAL FIBER OR GLASS WITH A RESIN BINDER, MINIMUM DENSITY: 3 POUNDS PER CUBIC FOOT, MAXIMUM K-FACTOR: 0.27 AT 75°F MEAN TEMPERATURE, TEMPERATURE RANGE: 35°F TO 350°F FACTORY APPLIED VAPOR BARRIER JACKET OF ALUMINUM FOIL LAMINATED TO FIRE RESISTANT KRAFT PAPER AND REINFORCED WITH GLASS FIBERS: 0.02 PERMEABILITY.

E.) ALL INSULATION SHALL BE APPLIED AS PER MANUFACTURERS RECOMMENDATIONS WITH ADHESIVE AND COPPER CLAD WIRE FOR FLEXIBLE TYPE AND MECHANICAL FASTENERS FOR RIGID TYPE. SEAL ALL SEAMS AND JOINTS VAPOR-TIGHT WITH FIRE RETARDANT, VAPOR BARRIER SEALANT.

F.) INTERNAL INSULATION EXPOSED TO AIRSTREAM SHALL PROVIDE DURABILITY IN ACCORDANCE WITH UL 181.

G.) ALTERNATE MANUFACTURERS:

1.) CERTAIN TEED
2.) OWENS-CORNING

M-21 ACOUSTIC TREATMENT

A.) ALL SUPPLY AND RETURN DUCTWORK WITHIN 20' OF FANS OR WITHIN 5' OF VAV AND CV BOX DISCHARGE, AND ALL TRANSFER AIR DUCTWORK SHALL BE INSTALLED WITH 1" ACOUSTIC LINING. SUCH ACOUSTIC LINING SHALL BE FLEXIBLE GLASS FIBER DUCT LINER, ANSI/ASTM C553 WITH "K" VALUE OF 0.24 AT 75°F; 1.5 LBS./CU. FT. MINIMUM DENSITY, COATED ON AIR SIDE FOR MAXIMUM VELOCITY OF 4000 FEET PER MINUTE; APPROVED BY THE NFPA.

B.) STAPLING METHOD OF ATTACHMENT SHALL NOT BE PERMITTED. MAT-FACED DUCT LINER SHALL BE ADHERED BY A FIRE RETARDANT ADHESIVE SUCH AS BENJAMIN FOSTER 81-99 OR EQUIVALENT. MECHANICAL FASTENERS WHICH DO NOT PIERCE THE SHEET METAL SHALL BE INSTALLED ON 16" CENTERS ON TOP SECTIONS (WHEN WIDTH EXCEEDS 12").

C.) ALL EXPOSED EDGES OF ACOUSTIC LINING SHALL BE INSTALLED WITH SHEET METAL NOSING AND CAULKED.

M-22 - NOT USED

M-23 VIBRATION ISOLATION

A.) ALL SUSPENDED FANS SHALL BE SUPPORTED WITH STEEL COMPRESSION SPRING AND NEOPRENE OR RUBBER ISOLATED UNIT WITHIN A STEEL HOUSING OR RETAINER LOCATED IN HANGER RODS. MINIMUM COMBINED STATIC DEFLECTION 1½". MINIMUM SPRING RUNOUT - ½". MASON INDUSTRIES, INC.- TYPE DNH.

M-24 ELECTRIC WIRING

A.) THE ELECTRICAL CONTRACTOR WILL ERECT ALL STARTING EQUIPMENT FURNISHED UNDER THIS SECTION, EXCEPT STARTERS SPECIFIED TO BE FACTORY MOUNTED AND WIRED AS ALL INTEGRAL PART OF THE EQUIPMENT, AND WILL DO ALL WIRING NECESSARY TO SUPPLY POWER TO THE ELECTRIC MOTOR PROVIDED UNDER THIS SECTION, INCLUDING POWER TO THE STARTERS AND CONNECTIONS FROM STARTERS TO THE MOTORS.

B.) THIS CONTRACTOR SHALL INSTALL ALL MOTOR CONTROL, TEMPERATURE CONTROL WIRING AND INTERLOCK WIRING EXCLUSIVE OF MOTOR POWER WIRING.

M-25 ELECTRIC MOTOR CONTROLS

A.) FURNISH AND TURN OVER THE ELECTRICAL CONTRACTOR WHO SHALL ERECT AND WIRE THE SAME, SUITABLE STARTING CONTROLLING EQUIPMENT, AND DISCONNECT SWITCHES.

B.) ALL CONTROLLERS SHALL BE ALLEN-BRADLEY, CUTLER-HAMMER, OR GENERAL ELECTRIC, FULLY ENCLOSED IN NEATLY FURNISHED VENTILATED BOXES. CONTROLLERS SHALL BE OF THE COMBINATION STARTER AND UNFUSED SWITCH TYPE.

C.) ALL STARTERS FOR MOTORS ½ HORSEPOWER AND LARGER SHALL BE MAGNETIC ACROSS-THE-LINE TYPE WITH UNFUSED DISCONNECT SWITCH UNLESS OTHERWISE NOTED. SUCH STARTERS SHALL BE 208 VOLT, 3 PHASE, 60 CYCLE, A.C. SOURCE.

D.) ALL MAGNETIC STARTERS SUBJECT TO MANUAL START SHALL HAVE MOMENTARY CONTACT START AND STOP BUTTONS BUILT INTO COVER. ALL MAGNETIC STARTERS SUBJECT TO ELECTRICAL INTERLOCKS OR AUTOMATIC CONTROLS SHALL HAVE HAND-OFF-AUTOMATIC SWITCHES BUILT INTO COVER.

E.) ALL MAGNETIC STARTERS SHALL HAVE THERMAL OVERLOAD AND VOLTAGE PROTECTION IN EACH PHASE LEG. PROVIDE EACH STARTER WITH MINIMUM OF TWO AUXILIARY CONTACTS, ONE NORMALLY OPEN AND ONE NORMALLY CLOSED.

M-26 AIR OUTLETS

A.) ALL OUTLET TYPES SHALL BE TESTED IN ACCORDANCE WITH ADC STANDARDS AND SHALL BEAR AN ADC LABEL. PROVIDE NEW AIR OUTLETS OF SIZE AND TYPE AS INDICATED ON THE DRAWING. CEILING DIFFUSERS SHALL BE ALUMINUM AND COMPLETE WITH GASKETS, OPPOSED BLADE DAMPERS AND CONTROL GRIDS. RETURN REGISTERS SHALL BE SINGLE DEFLECTION GRILLES WITH OPPOSED BLADE DAMPERS.

B.) CEILING OUTLETS SHALL BE FACTORY FINISHED WITH OFF-WHITE ENAMEL, OR AS OTHERWISE NOTED/APPROVED BY ARCHITECT/OWNER.

C.) ACCEPTABLE MANUFACTURERS:

1.) TITUS
2.) NAILOR
3.) PRICE

M-28 PIPE INSULATION

A.) INSULATE ALL NEW PIPING AND ALL EXISTING PIPING WITH PRE-FORMED PIPE INSULATION. INSULATION SHALL HAVE A MAXIMUM FLAME SPREAD INDEX OF 25 AND A SMOKE-DEVELOPED INDEX NOT EXCEEDING 450. PIPE INSULATION INSTALLED WITHIN AIR PLENUMS SHALL HAVE A FLAME SPREAD INDEX OF NOT MORE THAN 25 AND A SMOKE-DEVELOPED INDEX OF NOT MORE THAN 50 WHEN TESTED IN ACCORDANCE WITH ASTM E84 OR UL 723. REFER TO PIPE INSULATION SCHEDULE FOR INSULATION THICKNESS.

LIBERTY PLAZA SUITES

500 COMMERCE STREET
HAWTHORNE, NY 10532

ARCHITECT

dimovski architecture p.l.l.c.
59 Kensico Road, Thornwood, NY 10594
(914) 747-3500 | (914) 747-3588 fax
www.dimovskiarchitecture.com

STRUCTURAL ENGINEER

CHARLES A. MANGANARO
CONSULTING ENGINEERS
A PROFESSIONAL CORPORATION
303 SOUTH BROADWAY, SUITE 223, TARRYTOWN, NY 10591-5488
SHAILESH R. NAIK, P.E.
NEW YORK LICENSE No. 072797-1

MEP ENGINEER

OLA Consulting Engineers
50 Broadway,
Hawthorne, NY 10532
914.747.2800
8 West 38th Street,
Suite 501
New York, NY 10018
646.849.4110
ola-ce.com

NO.	REVISION/ISSUE	DATE
3	ISSUED FOR PERMIT	03-12-2021
2	ISSUED FOR PROGRESS 90%	03-05-2021
1.	ISSUED FOR PROGRESS	02-19-2021

SEAL

PROJECT

LIBERTY PLAZA SUITES

500 COMMERCE ST.
TOWN OF MT. PLEASANT, NY

DATE:	AUGUST 12, 2020
PROJECT NO:	NDIM0001.00
DRAWN BY:	HLD
CHECKED BY:	RJ
SCALE:	AS NOTED

DRAWING TITLE

MECHANICAL SPECIFICATIONS 1 OF 3

SHEET NO.

M0.2

SPECIFICATIONS CONTINUED

SHALL BE VAPOR SEALED USING VAPOR BARRIER TAPE AND VAPOR SEAL ADHESIVE. STAPLES ARE NOT PERMITTED. ALL INSULATION AND VAPOR BARRIERS SHALL BE CONTINUOUS THROUGH SLEEVES, HANGERS, ETC. INSULATION FOR STRAINERS AND OTHER FITTINGS OR ACCESSORIES REQUIRING SERVICING OR INSPECTION SHALL HAVE INSULATION REMOVABLE AND REPLACEABLE WITHOUT DAMAGE.

D.) ALTERNATE MANUFACTURERS:
1.) ARMSTRONG
2.) MANVILLE
3.) OWENS-CORNING

E.) PIPE INSULATION JACKETING: SHALL BE WHITE ZESTON 2000 PVC COVERS FOR PIPING AND FITTINGS. JACKET ALL PIPING AND FITTING THAT ARE EXPOSED IN ANY ROOM.

F.) PIPE LABELS: SHALL BE SETON ULTRA-MARK WEATHER RESISTANT FOR OUTDOOR APPLICATION AND OPTI-CODE FOR INDOOR APPLICATION. LETTERS AND ARROWS SHALL BE 2½" HIGH AND SHALL BE WHITE ON A GREEN BACKGROUND AND SHALL CONFORM TO ANSI AND OSHA STANDARDS. APPLY OVER INSULATION ONLY.

M-28 PIPING INSTALLATION - GENERAL REQUIREMENTS

A.) REFER TO DRAWINGS FOR REQUIRED PIPING LAYOUTS. CONNECTION DETAILS INDICATE REQUIRED PIPING AT VARIOUS PIECES OF EQUIPMENT. FLOOR PLANS INDICATE GENERAL ROUTING OF PIPING. SPECIFICATIONS DEFINE MATERIALS, INSTALLATION REQUIREMENTS AND SUPPLEMENTARY REQUIREMENTS TO THOSE SHOWN ON DRAWINGS. CONTRACTOR IS RESPONSIBLE FOR PROVIDING A COMPLETE SYSTEM BASED ON ALL DOCUMENTATION PROVIDED. TO EQUIPMENT SCHEDULES FOR NOMINAL FLOW RATES. FINAL SIZING SHALL BE BASED ON FLOW RATE OF CONTRACTOR PURCHASED EQUIPMENT.

B.) WHERE DRAWING DETAILS REFER BRANCH PIPE SIZING TO FLOW RATES, REFER TO DRAWINGS.

C.) PIPING SHALL BE INSTALLED IN STRAIGHT PARALLEL RUNS, PARALLEL TO PIPING OF OTHER TRADES. ROUTING SHALL BE COORDINATED WITH PIPING AND CONDUIT RUNS OF OTHER TRADES.

D.) ALL PIPE SHALL BE NEW, CLEAN, OF DOMESTIC MANUFACTURE, AND MARKED WITH APPROPRIATE STANDARD.

E.) PIPING SHALL BE INSTALLED TO MINIMIZE TURBULENCE AND PREVENT NOISE AND WATER HAMMER. WATER PIPING SHALL PITCH 1" IN 40 FEET, UPWARD IN DIRECTION OF FLOW. PROPER PROVISION SHALL BE MADE FOR EXPANSION AND CONTRACTION IN ALL PORTIONS OF PIPEWORK, TO PREVENT UNDUE STRAINS ON PIPING OR EQUIPMENT. ALL PIPE SHALL BE SUITABLY REINFORCED AT ALL ANCHOR POINTS.

F.) PIPE SUPPORTS SHALL BE SPACED, REDUCERS ARRANGED AND PIPING PITCHED TO ALLOW AIR TO BE VENTED TO SYSTEM HIGH POINTS AND TO ALLOW THE SYSTEM TO BE DRAINED AT THE LOW POINTS. DRAIN VALVES WITH HOSE CONNECTIONS SHALL BE PROVIDED AT THE BASE OF EACH RISER, AT ALL LOW POINTS AND WHEREVER REQUIRED TO PERMIT COMPLETE DRAINING OF ALL LINES.

G.) AUTOMATIC FLOAT TYPE AIR VENTS SHALL BE PROVIDED AT HIGH POINTS OF WATER LINES AND WHEREVER REQUIRED TO ALLOW AIR TO VENT FROM SYSTEM. EACH VENT SHALL HAVE A DRAIN LINE PIPED TO NEAREST INDIRECT WASTE.

H.) RUN OUTS, AND CONNECTIONS TO EQUIPMENT, SHALL BE PROVIDED WITH A SWING JOINT OR FLEXIBLE CONNECTION TO WITHSTAND EXPANSION AND CONTRACTION. RISERS SHALL HAVE SWING JOINTS COMPOSED OF AT LEAST 4 ELBOWS.

I.) ALL CHANGES IN SIZE AND DIRECTION OF PIPING SHALL BE MADE WITH FITTINGS. DO NOT USE MITER FITTINGS, FACE OR FLUSH BUSHINGS, CLOSE NIPPLES OR STREET ELBOWS. ALL NIPPLES (PIPE LESS THAN 3" LONG) SHALL BE EXTRA HEAVY.

J.) ALL BRANCH CONNECTIONS SHALL BE MADE WITH TEES, EXCEPT THAT ON STEEL PIPING FORGED STEEL "WELDOLETS" AND "LATROLETS" AS MANUFACTURED BY BONNEY FORGE MAY BE USED WHERE THE BRANCH PIPE IS AT LEAST TWO NOMINAL PIPE SIZES LESS THAN THE MAIN PIPE.

K.) ECCENTRIC REDUCING FITTINGS OR ECCENTRIC REDUCING COUPLINGS SHALL BE USED WHERE REQUIRED BY THE CONTRACT DOCUMENTS OR WHERE REQUIRED TO PREVENT POCKETING OF LIQUID OR NON- CONDENSIBLES.

L.) FITTINGS SHALL BE FACTORY MANUFACTURED. SHOP OR FIELD FABRICATED FITTINGS ARE NOT ACCEPTABLE. WELDING FITTINGS SHALL BE "TUBE-TURNS" OR EQUIVALENT. FITTINGS SHALL HAVE THE SAME PRESSURE RATING AS THE SYSTEM IN WHICH THEY ARE INSTALLED.

M.) ELECTROLYTIC COUPLINGS OR UNIONS SHALL BE INSTALLED BETWEEN COPPER AND STEEL PIPE.

N.) ALL JOINTS SHALL BE MADE IN A WORKMANLIKE MANNER USING CLEAN THREADS, DEBURRED PIPE AND PROPER MATERIALS. ALL JOINTS SHALL CONFORM TO THE APPLICABLE ANSI AND ASTM STANDARDS. QUALIFY WELDERS TO THE CODE FOR PRESSURE PIPING ANSI SPECIFICATIONS B31.1, WITH CERTIFICATION BY THE WELDING BUREAU OF HEATING, PIPING AND AIR CONDITIONING CONTRACTORS NATIONAL ASSOCIATION. ASME STAMP SHALL BE PROVIDED AS REQUIRED.

O.) RUN OUTS, AND CONNECTIONS TO EQUIPMENT, SHALL BE PROVIDED WITH A SWING JOINT OR FLEXIBLE CONNECTION TO WITHSTAND EXPANSION AND CONTRACTION. RISERS SHALL HAVE SWING JOINTS COMPOSED OF AT LEAST 4 ELBOWS.

Q.) PIPING MATERIALS: REFER TO PIPING MATERIAL SCHEDULE.

R.) PIPE FITTINGS: REFER TO PIPING MATERIAL SCHEDULE.

S.) PIPING CONNECTIONS TO EQUIPMENT

1.) FLANGES OR UNIONS SHALL BE PROVIDED AT ALL FINAL CONNECTIONS TO EQUIPMENT AND CONTROL VALVES TO FACILITATE DISMANTLING. OFFSETS SHALL BE PROVIDED AND CONNECTIONS ARRANGED SO THAT THE EQUIPMENT BEING SERVED MAY BE REMOVED WITHOUT DISTURBING THE PIPING.

2.) ALL AUTOMATIC VALVES SHALL BE PROVIDED WITH A GATE VALVE AND A STRAINER ON THE INLET SIDE.

3.) HANGERS AND SUPPORTS FOR CONNECTED EQUIPMENT SHALL CONFORM TO THE CRITERIA FOR PIPING. NO WIRE, TAPE OR METAL BANDS ARE PERMITTED.

4.) INSTALL ALL SUPPLY PIPING TO EQUIPMENT INCLUDING GATE VALVES AND STRAINERS AT LINE SIZE WITH THE REDUCTION IN SIZE BEING MADE ONLY AT THE INLET TO THE CONTROL VALVE OR PUMP. INSTALL THE OUTLET PIPING FROM THE CONTROL VALVE AT THE FULL SIZE OF THE TAPPING IN THE EQUIPMENT SERVED.

5.) FOR EQUIPMENT MOUNTED ON ISOLATION BASES AND WHEREVER INDICATED ON DRAWING AND DETAILS, MASON INDUSTRIES TYPE BSS STAINLESS STEAL BRAIDED FLEXIBLE HOSE CONNECTIONS OR EQUIVALENT SHALL BE PROVIDED.

T.) VALVES

1.) ALL HAND VALVES, CHECK-VALVES, VENT VALVES, COCKS, ETC., SHALL BE FURNISHED AND INSTALLED AS REQUIRED FOR THE COMPLETE AND PROPER VALVING OF THE ENTIRE INSTALLATION AS DEFINED HEREIN. VALVES SHALL HAVE THE SAME PRESSURE RATING AS THE SYSTEM IN WHICH THEY ARE INSTALLED.

2.) VALVES WITH HAND-WHEELS SHALL BE INSTALLED HORIZONTALLY OR VERTICALLY UPWARD UNLESS SPECIFICALLY SHOWN OTHERWISE. ALL VALVES SHALL BE INSTALLED IN ACCESSIBLE LOCATIONS TO FACILITATE EASY REMOVAL FOR REPAIR OR REPLACEMENT.

3.) VALVES SHALL BE FULL LINE SIZE UNLESS OTHERWISE NOTED. ALL DRAIN VALVES IN EQUIPMENT ROOMS SHALL BE LOCATED AT AN ELEVATION NOT GREATER THAN 6'-0" ABOVE FLOOR AND SHALL BE PROVIDED WITH 3/4" HOSE CONNECTIONS.

4.) VALVES SHALL BE CAPABLE OF BEING REPACKED WHILE WIDE OPEN AND OPERATING AT THEIR RATED PRESSURE.

5.) UNLESS OTHERWISE NOTED OR REQUIRED BY THE APPLICATION, SCREWED VALVES SHALL BE OF BRONZE CONSTRUCTION AND FLANGED VALVES OF CAST IRON CONSTRUCTION WITH BRONZE TRIM. GLOBE AND CHECK VALVE DISCS SHALL BE IN ACCORDANCE WITH MANUFACTURERS RECOMMENDATIONS FOR THE SERVICE. ALL CAST IRON BODY VALVES SHALL HAVE RENEWABLE BRONZE SEAT RINGS AND BRONZE SPINDLES.

6.) IN GENERAL, USE GLOBE VALVES FOR ALL THROTTLING SERVICE (INCLUDING PUMP DISCHARGES). FOR WATER LINES 3" AND OVER, ECCENTRIC PLUG VALVES SHALL BE USED. WHERE BUTTERFLY OR BALL VALVES ARE SPECIFIED THESE TYPES SUFFICE FOR THROTTLING. BALL VALVES USED FOR BALANCING SHALL HAVE LOCKING STOP.

7.) HORIZONTAL CHECK VALVES SHALL GENERALLY BE 15 DEGREE SWING CHECK TYPE. CHECK VALVES IN VERTICAL PIPING AND IN ALL PUMP DISCHARGES SHALL BE SPRING-CUSHIONED OF THE DISC OR DUAL PLATE TYPE AS MANUFACTURED BY ONE OF THE FOLLOWING:

a. MILLER VALVE CO.
b. CPV CO.
c. SMOLENSKY VALVE CO.
d. WILLIAMS GAUGE CO. - "WILLIAMS - HAGER"
e. MISSION "DUO-CHEK"

8.) EXCEPT WHERE SPECIFICALLY STATED TO CONTRARY, ALTERNATE MANUFACTURERS FOR VALVES ARE AS FOLLOWS: CRANE CO., LUNKENHEIMER CO., NIBCO, INC.

9.) THE CONTRACTOR SHALL PROVIDE THE VALVES SPECIFIED, OR THE EQUIVALENT AS PRODUCED BY ONE OF THE ABOVE LISTED MANUFACTURERS.

U.) PIPE SLEEVES AND ESCUTCHEONS

1.) ALL PIPE OPENINGS THROUGH WALLS, CEILINGS, FURRING, PARTITIONS AND SLABS SHALL BE PROVIDED WITH SLEEVES HAVING AN INTERNAL DIAMETER AT LEAST 2" LARGER THAN THE OUTSIDE DIAMETER OF THE PIPE FOR UNINSULATED LINES OR OF THE INSULATION FOR INSULATED SERVICES. SLEEVES SHALL BE LOCATED SO THAT THE PIPE PASSES THROUGH CENTER OF SLEEVE.

2.) SLEEVES SHALL BE INSTALLED THROUGH INTERIOR WALLS AND PARTITIONS FLUSH WITH FINISHED SURFACE; SLEEVES THROUGH OUTSIDE WALLS SHALL PROJECT 1/2" ON EACH SIDE OF THE FINISHED WALL; FLOOR SLEEVES SHALL PROJECT 1" ABOVE FINISHED FLOORS.

3.) INTERIOR WALLS AND FLOORS - THE SPACE BETWEEN OUTSIDE OF PIPE OR INSULATION AND THE INSIDE OF THE SLEEVE OR FRAMED OPENING SHALL BE FILLED WITH FIBROUS GLASS AND FIRE STOPPED WITH 3-M FIRE BARRIER.

4.) ESCUTCHEONS SHALL BE PROVIDED ON BOTH SIDES OF THE PENETRATION THROUGH THE STRUCTURE FOR ALL PIPES EXPOSED TO VIEW PASSING THROUGH FURRING, WALLS, FLOORS, CEILING AND PARTITIONS, WHETHER INSULATED OR NOT. FOR PIPES PASSING THROUGH FLOORS, AND EXTERIOR WALLS, ESCUTCHEONS SHALL FIT OVER THE SLEEVE.

5.) ALL ESCUTCHEONS SHALL BE CHROME PLATED BRASS, SPLIT HINGED TYPE WITH SET SCREWS.

V.) PIPING SPECIALTIES

A.) PROVIDE ALL SPECIAL APPLIANCES REQUIRED FOR THE PROPER OPERATION OF THE PIPING SYSTEMS.

B.) PROVIDE "Y" TYPE STRAINERS WITH FULL SIZE BLOW-OFF-VALVES. SPENCE, MUELLER, McALEAR OR CRANE CAST BRONZE UP TO 2 1/2", SEMI-STEEL 3" AND OVER. MONEL BASKETS WITH NO. 20 MESH.

C.) PROVIDE FLOAT AND THERMOSTATIC TRAPS AS MANUFACTURED BY SPIRAX/SARCO OR APPROVED EQUAL. TRAPS SHALL BE CAST IRON BODY AND BOLTED COVER, STAINLESS STEEL OR BRONZE BELLOWS TYPE AIR VENT, STAINLESS STEEL OR COPPER FLOAT, STAINLESS STEEL LEVER AND VALVE ASSEMBLY.

W.) CLEANING - ALL PIPING SYSTEMS

1.) ALL OPEN ENDS OF PIPING, VALVES AND EQUIPMENT SHALL BE PLUGGED EXCEPT WHEN ACTUAL WORK IS BEING PERFORMED, TO MINIMIZE ACCUMULATION OF DIRT AND DEBRIS.

2.) AFTER INSTALLATION IS COMPLETE TEMPORARY SCREENS SHALL BE PLACED AT CONNECTIONS TO ALL EQUIPMENT AND AT AUTOMATIC CONTROL VALVES WHERE PERMANENT STRAINERS ARE NOT PROVIDED.

3.) PRIOR TO THE PERFORMANCE OF TESTS, ALL PIPING THAT IS TO RECEIVE A HYDROSTATIC TEST SHALL BE FLUSHED OUT WITH CLEAN WATER. PIPING THAT IS TO BE AIR OR GAS PRESSURE TESTED SHALL BE BLOWN OUT WITH COMPRESSED AIR. DIRT AND DEBRIS COLLECTED AT SCREENS STRAINERS, AND OTHER POINTS FROM THE SYSTEM, SHALL BE REMOVED BOTH BEFORE AND AFTER TESTING.

4.) THE MANUFACTURER SHALL CLEAN ALL STEEL PIPE AND FITTINGS BEFORE SHIPMENT. THE PIPE AND FITTINGS SHALL BE DIPPED INTO A SOLUTION OF SULPHURIC ACID TO REMOVE THE MILL SCALE AND THEN INTO A SOLUTION TO STOP THE CHEMICAL ACTION ON THE METAL AND REMOVE GREASE.

X.) HANGERS, SUPPORTS, ANCHORS AND GUIDES - GENERAL

1.) SUPPORT, ANCHOR AND GUIDE ALL PIPING AND CONNECTED EQUIPMENT TO PRECLUDE FAILURE OR DEFORMATION. CONSTRUCT AND INSTALL HANGERS, SUPPORTS, ANCHORS, GUIDES AND ACCESSORIES IN CONFORMANCE WITH THE CODE FOR PRESSURE PIPING ANSI B-31.1 AS A MINIMUM REQUIREMENT. WHERE SPECIFICATION REQUIREMENTS ARE MORE STRINGENT THAN THE CODE, THE SPECIFICATION SHALL APPLY. WIRE, TAPE OR METAL BANDS SHALL NOT BE USED.

2.) PIPING SHALL BE SECURELY FASTENED TO THE STRUCTURE WITHOUT OVERSTRESSING ANY PORTION OF THE SUPPORTS OF THE STRUCTURE ITSELF. SUFFICIENT INTERMEDIATE STEEL SHALL BE PROVIDED TO TRANSFER LOADS TO AREAS WHERE THEY CAN SAFELY BE ACCOMMODATED. PIPE SUPPORTS, ANCHORS AND GUIDES SHALL BE SECURED TO STEEL BY WELDED BRACKETS, BEAM CLAMPS, OR BY FASTENING RODS OVER THE BEAM TOP FLANGE, AND TO CONCRETE BY MEANS OF INSERTS, OR IF GREATER LOAD CARRYING CAPACITY IS REQUIRED, BY MEANS OF STEEL FISHPLATES EMBEDDED IN THE CONCRETE ABOVE THE REINFORCEMENT RODS. ALL HANGERS SHALL BE LOCATED TO PERMIT FREE EXPANSION AND CONTRACTION.

3.) UNLESS OTHERWISE INDICATED, ALL HORIZONTAL PIPING SHALL BE HUNG TIGHT TO CEILING BEAMS AND LOCATED MORE THAN SIX FEET ABOVE THE FLOOR. PIPING LOCATED WITHIN SIX FEET OF THE FLOOR SHALL BE SUPPORTED ON FABRICATED STANDS OR PIERS. WHERE PIPING RUNS ALONG WALLS, SUITABLE WALL TYPE AND GANG-TYPE HANGERS SHALL BE PROVIDED.

4.) PIPING AND TUBING SHALL BE SUPPORTED AT ALL CHANGES IN DIRECTION. MAXIMUM DEFLECTION SHALL BE 1/8". MAXIMUM SPACING BETWEEN SUPPORTS SHALL BE:

MATERIAL	1/2" - 1-1/4"	1-1/2" - 2"
COPPER TUBING	6 FT O.C.	10 FT O.C.

5.) HANGER RODS FOR BOTH SINGLE AND DOUBLE ROD HANGERS SHALL CONFORM TO THE FOLLOWING SCHEDULE OF DIAMETERS:

STEEL PIPE			COPPER TUBING	
PIPE SIZE	HANGER ROD Ø		PIPE SIZE	HANGER ROD Ø
1/2" - 1"	- 3/8"	1/2" - 2"	- 3/8"	
1-1/4" - 2"	- 1/2"	2-1/2" - 5"	- 5/8"	
2-1/2" - 4"	- 1/2"	5" - 6"	- 3/4"	

6.) COPPER PLATED PIPE HANGERS AND SUPPORTS SHALL BE USED FOR VERTICAL AND HORIZONTAL RUNS OF COPPER OR BRASS PIPE AND TUBING WHERE THE HANGER IS IN DIRECT CONTACT WITH THE PIPE, OTHERWISE STEEL HANGERS AND SUPPORTS SHALL BE USED.

7.) PIPE HANGERS AND SUPPORTS COMPLETE WITH RODS, BOLTS, LOCKNUTS, SWIVELS, COUPLINGS, BRACKETS AND ALL OTHER COMPONENTS AND ACCESSORIES SHALL BE PROVIDED.

Y.) HANGER TYPES

1.) IN GENERAL, HANGERS SHALL BE OF CLEVIS TYPE OR ROLL TYPE WITH VERTICAL ADJUSTMENT. WHERE SEVERAL LINES OF PIPING RUN AS A COMMON GROUP, THEY SHALL BE SUPPORTED ON A COMMON HANGER BAR OF GALVANIZED CHANNEL OR BACK TO BACK ANGLE SECTIONS OR "UNISTRUT" TYPE SUPPORTS.

2.) HANGERS SHALL BE AS FOLLOWS:

APPLICATION	CENTRAL IRON FIG. NO.
CLEVIS HANGER	10
RISER CLAMP - THRU 3"	261
RISER CLAMP - OVER 3"	262
ROLL HANGER THRU 6"	272
ROLL HANGER OVER 6"	171

3.) ALTERNATE MANUFACTURERS: GRINELL, GRABLER, CRANE

M-29 WATER TREATMENT - NOT USED

M-30 AUTOMATIC TEMPERATURE CONTROLS

A.) PROVIDE ALL LABOR, MATERIALS, EQUIPMENT AND SERVICES, AND PERFORM ALL OPERATIONS REQUIRED FOR THE AUTOMATIC TEMPERATURE CONTROL SYSTEM.

B.) THE CONTROL SYSTEM SHALL BE COMPLETE WITH ALL NECESSARY CONTROL DEVICES, THERMOSTATS, VALVES, SWITCHES, PANELS AND CONTROL WIRING TO PROVIDE THE DESCRIBED FUNCTIONS. PROVIDE INFORMATION TO THE ELECTRICAL CONTRACTOR REQUIRED TO PERMIT INSTALLATION OF POWER WIRING TO ANY CONTROL COMPONENTS.

C.) THE CONTROLS MANUFACTURER SHALL FURNISH FACTORY WIRED CONTROL PANELS WHICH SHALL HOUSE ALL RELAYS, DEVICES, SWITCHES, TRANSFORMERS, TERMINAL STRIPS, ETC., AS REQUIRED FOR THE COMPLETE TEMPERATURE CONTROL OF THE SYSTEM.

D.) ALL CONTROLS SHALL BE THE PRODUCT OF ONE (1) MANUFACTURER AND ALL COMPONENTS SHALL BE U.L. APPROVED WHERE APPLICABLE. SYSTEM SHALL BE THE LATEST TOP QUALITY EQUIPMENT AND SHALL BE INSTALLED COMPLETE IN ALL RESPECTS BY COMPETENT MECHANICS, REGULARLY EMPLOYED BY THE MANUFACTURER OF THE CONTROL SYSTEM. ALL AUTOMATIC CONTROL VALVES AND DAMPERS SHALL BE MANUFACTURED BY THE CONTROL MANUFACTURER.

E.) AFTER COMPLETION OF THE CONTROL SYSTEM WORK, THE CONTROL MANUFACTURER SHALL REGULATE AND ADJUST ALL THERMOSTATS, CONTROL VALVES, ETC., AND PLACE THEM IN COMPLETE OPERATING CONDITION SUBJECT TO THE REVIEW OF THE ENGINEERS. COMPLETE INSTRUCTIONS SHALL BE GIVEN TO THE OPERATING PERSONNEL AND/OR OWNER.

F.) THE CONTROL SYSTEM HEREIN SPECIFIED SHALL BE FREE FROM DEFECTS IN WORKMANSHIP AND MATERIAL UNDER NORMAL USE AND SERVICE. IF, WITHIN ONE (1) YEAR FROM DATE OF ACCEPTANCE BY THE OWNER, ANY EQUIPMENT HEREIN DESCRIBED IS PROVED TO BE DEFECTIVE IN WORKMANSHIP OR MATERIAL, IT SHALL BE ADJUSTED, REPAIRED OR REPLACED FREE OF CHARGE.

G.) DELIVER TO THE OWNER TWO (2) COPIES OF THE AS-INSTALLED CONTROL SYSTEM, LAMINATED IN CLEAR PLASTIC. PROVIDE IDENTIFYING TAGS ON ALL CONTROLS TO CONFORM TO THE DESIGNATIONS ON THE CONTROL DIAGRAMS.

H.) ALL CONTROL WIRING SHALL BE RUN IN EMT OR GALVANIZED CONDUIT. CONTROL CONDUIT AND/OR PIPING SHALL BE CONCEALED IN ALL SPACES EXCEPT IN MECHANICAL EQUIPMENT ROOMS AND UNFINISHED SPACES, AND SHALL BE INSTALLED IN PARALLEL BANKS WITH ALL CHANGES IN DIRECTIONS MADE AT 90 DEGREE ANGLES. CONTROL AND INSTRUMENT WIRING SHALL NOT BE INSTALLED ON DUCTWORK. WIRING AND PIPING SHALL BE SECURED TO THE BUILDING STRUCTURE, SUCH AS WALLS, COLUMNS, UNDERSIDE OF SLABS, ETC.

I.) ALL CONTROLLERS SHALL BE OF THE FULLY PROPORTIONING TYPE AND SHALL BE PROVIDED WITH AN ADJUSTABLE THROTTLING RANGE, MINIMUM RANGE SHALL BE 1°F. ALL ROOM THERMOSTATS SHALL BE LOCATED AS SHOWN ON THE PLANS. ALL THERMOSTATS AND OTHER CONTROLLERS SHALL HAVE ADJUSTABLE SET POINTS.

J.) PROVIDE A MINIMUM OF 5 FEET EXCESS CONTROL WIRING TO EACH THERMOSTAT FOR FUTURE RELOCATION OF THERMOSTATS. EXCESS CONTROL WIRING SHALL BE NEATLY BUNDLED AND SECURED.

M-31 SEQUENCE OF OPERATIONS

1.) THIS CONTRACTOR SHALL PROVIDE A CONTROL SYSTEM COMPLETE WITH ALL NECESSARY WIRING, VALVES, INTERLOCKS, PANELS, ETC. FOR SYSTEM TO OPERATE AS SPECIFIED IN THE SEQUENCE OF OPERATION.

2.) SUBMITTALS FOR REVIEW

A.) SHOP DRAWINGS: INDICATE ALL MECHANICAL CONTROLLED COMPONENTS AND CONTROL SYSTEM COMPONENTS. LABELED WITH SETTINGS, AND ADJUSTABLE RANGE OF CONTROLS AND LIMITS. INCLUDE WRITTEN DESCRIPTION OF CONTROL SEQUENCE.

B.) INCLUDE FLOW DIAGRAMS FOR EACH CONTROL SYSTEM, GRAPHICALLY DEPICTING CONTROL LOGIC. INCLUDE DRAFT COPIES OF GRAPHIC DISPLAYS INDICATING MECHANICAL SYSTEM COMPONENTS, CONTROL SYSTEM COMPONENTS, AND CONTROLLED FUNCTION STATUS AND VALUE.

3.) HEAT PUMPS: HEAT PUMPS SHALL BE CONTROLLED THROUGH THE UNIT MANUFACTURES PROGRAMMABLE DIGITAL ROOM THERMOSTAT (PROVIDE ONE THERMOSTAT FOR EACH HEAT PUMP UNIT). REFER TO SPECIFICATION SECTION 23 81 29 VARIABLE-REFRIGERANT-FLOW HVAC SYSTEM CONTROLLERS. THE THERMOSTAT SHALL BE CAPABLE OF SET POINT ADJUSTMENT WITH AN ADJUSTABLE DEAD BAND, HEATING COOLING CHANGE OVER EITHER MANUAL OR AUTOMATIC AS WELL AS FAN SPEED AND ON/OFF/AUTO MODES. THE ZONE AIR CONDITIONER SHALL BE ARRANGED TO MAINTAIN ROOM SET POINT. COOLING OR HEATING, UPON A RISE IN SPACE TEMPERATURE ABOVE SET POINT, (COOLING), OR DROP BELOW SET POINT (HEATING) THE EVAPORATOR FAN SHALL START. FAN SPEED CONTROL SHALL AUTOMATICALLY ADJUST TO MAINTAIN ROOM SET POINT IN RESPONSE TO LOAD. CONDENSER AND HEAD PRESSURE CONTROL SHALL BE PERFORMING BY THE UNIT MANUFACTURE'S INTERNAL CONDENSING UNIT CONTROLS.

4.) KITCHEN AND TOILET EXHAUST FANS: GENERAL AND TOILET EXHAUST FANS SHALL RUN AS SCHEDULED THROUGH A PROGRAMMABLE TIMECLOCK. THESE FANS SHALL BE INITIALLY SCHEDULED TO RUN 24 HRS A DAY 7 DAYS A WEEK. FAN FAILURE SHALL BE ALARMED AT THE ITM SYSTEM CONTROL PANEL WITH INDICATOR LIGHT CORRESPONDING TO THE SPECIFIC FAN AND AN ALARM SOUND.
KITCHEN EXHAUST FANS SHALL BE CONTINUOUSLY ENABLED. PROVIDE A STATIC PRESSURE SENSOR 2/3 DOWNSTREAM OF EACH KITCHEN EXHAUST FAN. UPON A RISE IN STATIC PRESSURE ABOVE SETPOINT (ADJUSTABLE) THE KITCHEN EXHAUST FAN SPEED SHALL INCREASE. UPON A DROP IN STATIC PRESSURE BELOW SETPOINT (ADJUSTABLE) THE KITCHEN EXHAUST FAN SPEED SHALL DECREASE.

5.) GARAGE EXHAUST FANS: PROVIDE EACH GARAGE EXHAUST FAN SYSTEM WITH CARBON MONOXIDE (CO) AND NITROGEN DIOXIDE (NO2) DETECTORS SPACED 50 FEET ON CENTER AND COVERING A MAXIMUM AREA OF 7,500 SQUARE FEET EACH. UPON A RISE IN CO AND NO2 ABOVE SETPOINT THE FAN SPEED SHALL INCREASE TO ITS MAXIMUM SPEED. UPON A DROP IN CO AND NO2 BELOW SETPOINT THE FAN SPEED SHALL DECREASE TO ITS MINIMUM SPEED. CONTROL SYSTEM SHALL BE SIMILAR TO HONEYWELL MODEL 301C. PROVIDE ALARM AT ITM TO ALARM UPON CO OR NO2 DETECTION AS WELL AS FAILURE OR ANY GARAGE EXHAUST FAN

6.) TRASH ROOM EXHAUST FAN: THE TRASH ROOM EXHAUST FAN SHALL RUN AS SCHEDULED THROUGH A PROGRAMMABLE TIMECLOCK. THE TRASH ROOM FAN SHALL BE SCHEDULED TO RUN 24 HRS A DAY 7 DAYS A WEEK. FAN FAILURE SHALL BE ALARMED IN THE GROUNDS FLOOR TRASH ROOM. PROVIDE SYSTEM CONTROL PANEL WITH INDICATOR LIGHT AND ALARM HORN WITH SILENCE BUTTON.

7.) UNIT HEATERS & CABINET UNIT HEATERS:

A. RTU-1: PROVIDE WALL MOUNTED PROGRAMMABLE THERMOSTAT IN LOBBY. THERMOSTAT SHALL BE 7-DAY 3-EVENT PROGRAMMABLE WITH OCCUPIED AND UNOCCUPIED MODES AND LOCKABLE CLEAR PLASTIC COVER. IN THE OCCUPIED MODE THE OUTSIDE AND EXHAUST AIR DAMPER SHALL BE OPEN TO MINIMUM POSITION AND RETURN AIR DAMPER SHALL BE OPEN. DURING THE UNOCCUPIED MODE THE OUTSIDE AND EXHAUST AIR DAMPER SHALL BE CLOSED AND RETURN AIR DAMPER OPEN. COOLING MODE: UPON A RISE IN SPACE TEMPERATURE ABOVE SETPOINT DX COOLING SHALL CYCLE ON. UPON A DROP IN SPACE TEMPERATURE BELOW SETPOINT THE REVERSE SHALL OCCUR. HEATING MODE: UPON A DROP IN SPACE TEMPERATURE BELOW SETPOINT GAS HEATING SHALL ENERGIZE. UPON A RISE IS SPACE TEMPERATURE ABOVE SETPOINT THE REVERSE SHALL OCCUR. PROVIDE ENTHALPY BASED ECONOMIZER OPERATION WHEN OUTDOOR CONDITIONS PERMIT.

B. RTU-2: PROVIDE WALL MOUNTED PROGRAMMABLE THERMOSTAT LOCATED IN THE MAIL ROOM WITH REMOTE RETURN AIR TEMPERATURE SENSOR. THERMOSTAT SHALL BE 7-DAY 3-EVENT PROGRAMMABLE WITH OCCUPIED AND UNOCCUPIED MODES AND LOCKABLE CLEAR PLASTIC COVER. IN THE OCCUPIED MODE THE OUTSIDE AND EXHAUST AIR DAMPER SHALL BE OPEN TO MINIMUM POSITION AND RETURN AIR DAMPER SHALL BE OPEN. DURING THE UNOCCUPIED MODE THE OUTSIDE AND EXHAUST AIR DAMPER SHALL BE CLOSED AND RETURN AIR DAMPER OPEN. COOLING MODE: UPON A RISE IN RETURN AIR TEMPERATURE ABOVE SETPOINT DX COOLING SHALL CYCLE ON. UPON A DROP IN RETURN AIR TEMPERATURE BELOW SETPOINT THE REVERSE SHALL OCCUR. HEATING MODE: UPON A DROP IN RISE IN RETURN AIR TEMPERATURE BELOW SETPOINT GAS HEATING SHALL ENERGIZE. UPON A RISE IS RETURN AIR TEMPERATURE ABOVE SETPOINT THE REVERSE SHALL OCCUR. PROVIDE ENTHALPY BASED ECONOMIZER OPERATION WHEN OUTDOOR CONDITIONS PERMIT.

M-32 MISCELLANEOUS

A.) THE CONTRACTOR SHALL PROVIDE THE OWNERS WITH CATALOG DATA, OPERATING INSTRUCTIONS, MAINTENANCE INSTRUCTIONS AND RECORD (AS-BUILT) DRAWINGS OF ALL COMPLETED WORK. AS-BUILT DRAWINGS SHALL SHOW EXACT LOCATION OF ALL MECHANICAL SYSTEMS, EQUIPMENT, DUCTWORK, PIPING, ETC.

B.) SUBMIT THREE (3) SETS OF AS BUILT DRAWINGS AND AN ELECTRONIC FILE OF THE AS BUILT DOCUMENTS IN AN AUTO CAD LT 2004 FORMAT TO BUILDING MANAGEMENT.

C.) ALL WORK SHALL BE GUARANTEED FOR A PERIOD OF ONE YEAR FROM THE DATE OF ACCEPTANCE BY THE OWNER.

D.) PROVIDE CONTROL SYSTEM TRAINING TO OWNERS PERSONNEL.

END OF SPECIFICATIONS

LIBERTY PLAZA SUITES

500 COMMERCE STREET
HAWTHORNE, NY 10532

ARCHITECT
dimovski architecture PLLC
59 Kensico Road, Thornwood, NY 10594
(914) 747-3500 | (914) 747-3588 fax
www.dimovskiarchitecture.com

STRUCTURAL ENGINEER
CHARLES A. MANGANARO CONSULTING ENGINEERS
A PROFESSIONAL CORPORATION
303 SOUTH BROADWAY, SUITE 223, TARRYTOWN, NY 10591-5488
SHAILESH R. NAIK, P.E.
NEW YORK LICENSE No. 072797-1

MEP ENGINEER
OLA Consulting Engineers
60 Broadway,
Hawthorne, NY 10532
914.747.2800
8 West 38th Street,
Suite 601
New York, NY 10018
646.849.4110
ola-ce.com

NO.	REVISION/ISSUE	DATE
1	DOB COMMENTS	04-26-2021
4	ISSUED FOR PRICING	03-16-2021
3	ISSUED FOR PERMIT	03-12-2021
2	ISSUED FOR PROGRESS 90%	03-05-2021
1.	ISSUED FOR PROGRESS	02-19-2021

SEAL

STATE OF NEW YORK
JOHN TOMPE
071678
LICENSED PROFESSIONAL ENGINEER

PROJECT

LIBERTY PLAZA SUITES
500 COMMERCE ST.
TOWN OF MT. PLEASANT, NY

DATE:	AUGUST 12, 2020
PROJECT NO:	NDIM0001.00
DRAWN BY:	HLD
CHECKED BY:	RJ
SCALE:	AS NOTED

DRAWING TITLE

MECHANICAL SPECIFICATIONS 2 OF 2

SHEET NO.

M0.3

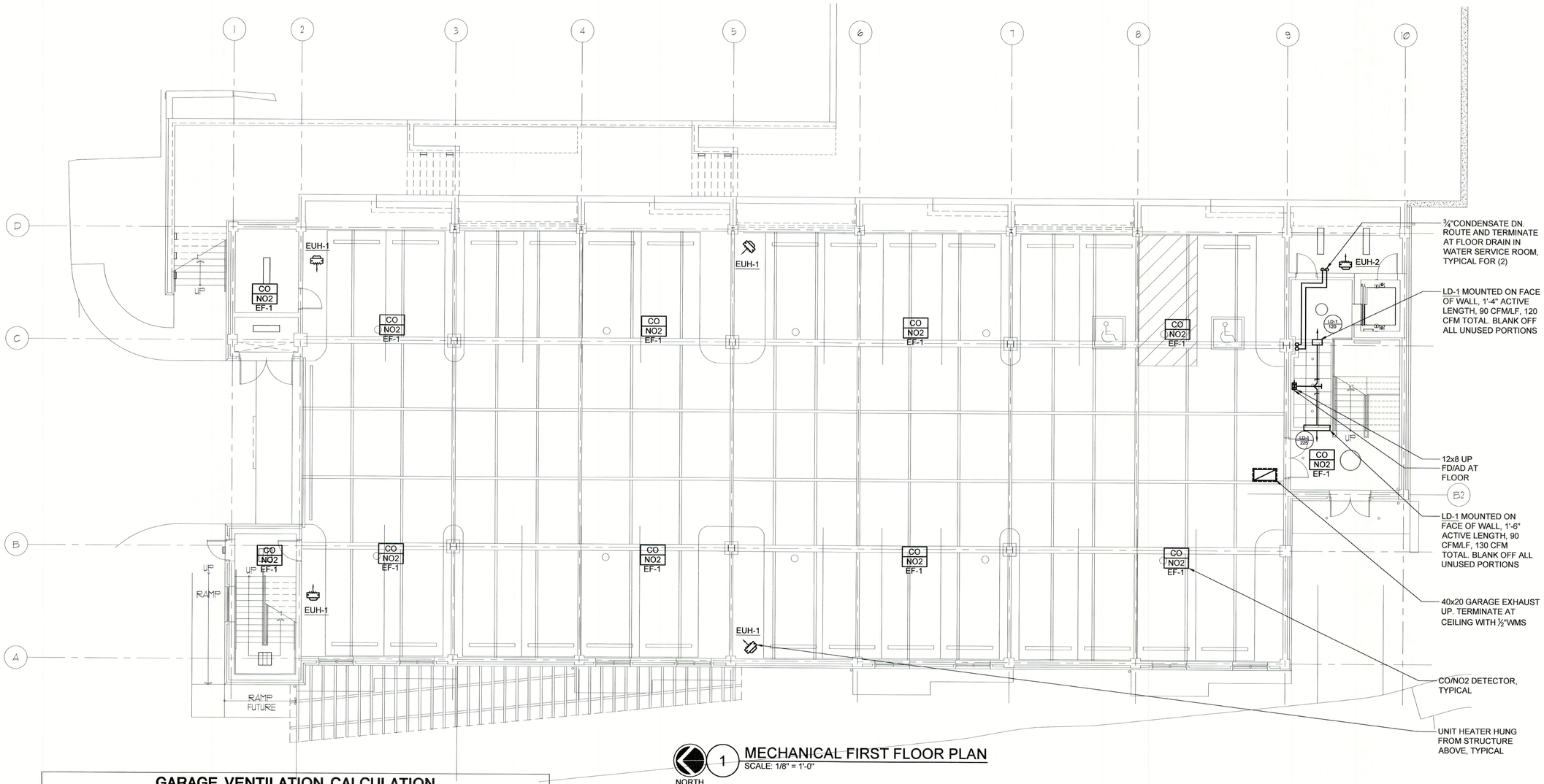

GARAGE VENTILATION CALCULATION

EXHAUST FAN SYSTEM	AREA (SQUARE FEET)	MAXIMUM CFM = 0.75 CFM/SQUARE FOOT	MINIMUM CFM = 0.05 CFM/SQUARE FOOT	MAXIMUM CONCENTRATION IN PPM	
				CO	NO2
EF-1	10,414	7,811	521	25	2

NOTES:
1. EXHAUST FAN EF-1 SHALL OPERATE CONTINUOUSLY AT THE MAXIMUM CFM INDICATED ABOVE WHEN CO OR NO2 CONCENTRATION IS GREATER THEN OR EQUAL TO THE MAXIMUM CONCENTRATION INDICATED ABOVE. WHEN CONCENTRATIONS ARE LESS THAN THE CONCENTRATIONS INDICATED ABOVE EF-1 SHALL OPERATE AT MINIMUM CFM.

NORTH

1 MECHANICAL FIRST FLOOR PLAN
SCALE: 1/8" = 1'-0"

NOTES:
1. PROVIDE GARAGE CO AND NO2 DETECTION SYSTEM THROUGHOUT ENCLOSED PARKING GARAGE. DETECTION SHALL BE INSTALLED IN ALL AREAS ADJACENT WITH DIRECT ACCESS TO GARAGE, INCLUDING LOBBIES, STAIRWELLS, AND CORRIDORS.

LIBERTY PLAZA SUITES

500 COMMERCE STREET
HAWTHORNE, NY 10532

ARCHITECT

dimovski architecture P.L.L.C.
59 Kensico Road, Thornwood, NY 10594
(914) 747-3500 | (914) 747-3588 fax
www.dimovskiarchitecture.com

STRUCTURAL ENGINEER

CHARLES A. MANGANARO CONSULTING ENGINEERS
A PROFESSIONAL CORPORATION
303 SOUTH BROADWAY, SUITE 223, TARRYTOWN, NY 10591-5488

SHAILESH R. NAIK, P.E.
NEW YORK LICENSE No. 072797-1

MEP ENGINEER

OLA Consulting Engineers
60 Broadway,
Hawthorne, NY 10532
914.747.2950
8 West 38th Street,
Suite 501
New York, NY 10018
646.848.4110
olace.com

NO.	REVISION/ISSUE	DATE
3	ISSUED FOR PERMIT	03-12-2021
2	ISSUED FOR PROGRESS 90%	03-05-2021
1.	ISSUED FOR PROGRESS	02-19-2021

SEAL

STATE OF NEW YORK
JOHN TOMEI
071678
LICENSED PROFESSIONAL ENGINEER

PROJECT

LIBERTY PLAZA SUITES
500 COMMERCE ST.
TOWN OF MT. PLEASANT, NY

DATE:	AUGUST 12, 2020
PROJECT NO:	NDIM0001.00
DRAWN BY:	HLD
CHECKED BY:	RJ
SCALE:	AS NOTED

DRAWING TITLE

MECHANICAL FIRST FLOOR NEW WORK PLAN

SHEET NO.

M2.1

MECHANICAL KEYED NOTES

1. 6x4 TOILET EXHAUST UP IN SHAFT. PROVIDE FIRE DAMPER AND ACCESS DOOR AT SHAFT DUCT PENETRATION AT THIS LEVEL.
2. 8x6 KITCHEN EXHAUST UP IN SHAFT. PROVIDE SUB-DUCT FOR DUCTWORK PENETRATING FIRE RATED WALLS. REFER TO MECHANICAL DETAILS M7.1 & M7.2.

2.1 10x8 KITCHEN EXHAUST UP IN SHAFT. PROVIDE SUB-DUCT FOR DUCTWORK PENETRATING FIRE RATED WALLS. REFER TO MECHANICAL DETAILS M7.1 & M7.2.

3. 8x6 DN TO KITCHEN HOOD EXHAUST OUTLET. TRANSITION DUCTWORK AS REQUIRED FOR CONNECTION. PROVIDE CEILING RADIATION DAMPER AT RATED CEILING PENETRATION.
4. PROVIDE KITCHEN EXHAUST ZONE REGISTER TERMINAL AND INTERLOCK WITH RANGE HOOD OPERATION. SEE MECHANICAL EQUIPMENT NOTES ON DRAWING M6.1. (1)
5. 4"Ø LAUNDRY EXHAUST UP TO ROOF. DRYER EXHAUST TOTAL DUCT LENGTH AND NUMBER OF BENDS, FROM APPLIANCE OUTLET TO EXHAUST CAP TERMINATION, SHALL NOT EXCEED MANUFACTURER MAXIMUM RECOMMENDED EQUIVALENT LENGTH.
6. ⅝"RS & ⅜"RL ASSOCIATED WITH APARTMENT HEAT PUMP UNIT UP IN SHAFT.
7. 16x10 SUPPLY AIR UP IN SHAFT.
8. 16x10 RETURN AIR UP IN SHAFT.
9. 18x10 POINT OF RETURN ABOVE HUNG CEILING, TERMINATE WITH ½"WMS. PROVIDE FIRE DAMPER AND ACCESS DOOR AT SHAFT DUCT PENETRATION.
10. 14x8 SUPPLY DUCT UP IN SHAFT.
11. 14x8 RETURN DUCT UP IN SHAFT.
12. 16x8 POINT OF RETURN ABOVE HUNG CEILING, TERMINATE WITH ½"WMS. PROVIDE FIRE DAMPER AND ACCESS DOOR AT SHAFT DUCT PENETRATION.

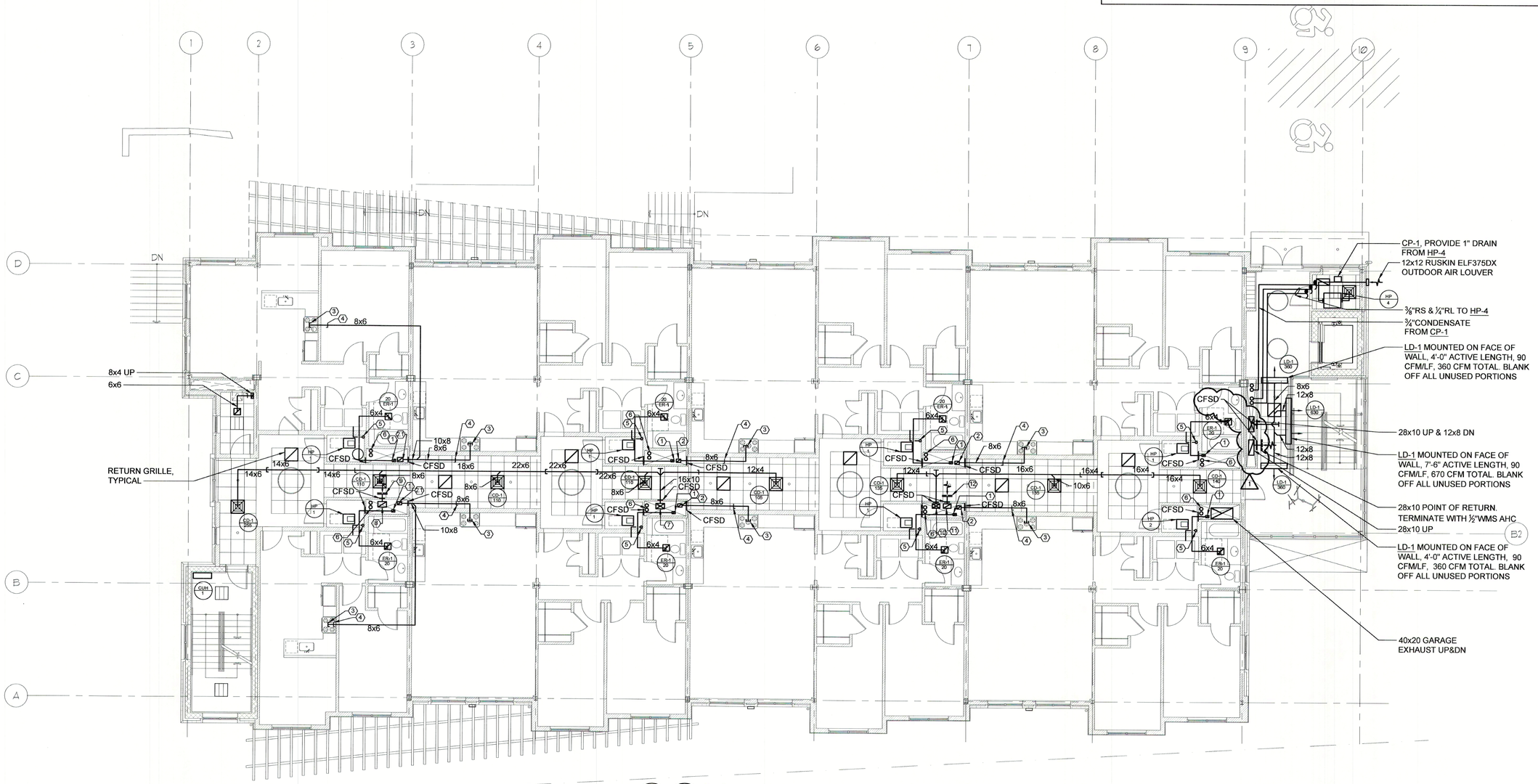

1 MECHANICAL SECOND FLOOR PLAN

SCALE: 1/8" = 1'-0"

NORTH

NOTES:
1. REFER TO APARTMENT TYPE PLANS ON DRAWING M4.1 FOR EQUIPMENT AND DUCTWORK DISTRIBUTION WITHIN APARTMENTS.
2. PROVIDE FIRE DAMPERS IN ALL DUCTWORK PENETRATING FIRE RATED WALLS.
3. PROVIDE COMBINATION FIRE/SMOKE DAMPER IN ALL WALLS PENETRATING SMOKE WALLS.
4. REFER TO ARCHITECTURAL DRAWINGS FOR FIRE AND SMOKE WALL LOCATIONS.
5. ALL KITCHEN EXHAUST DAMPERS SHALL BE CAR TYPE DAMPERS. REFER TO MECHANICAL EQUIPMENT NOTES.
6. ALL TOILET EXHAUST DAMPERS SHALL BE ACCESSIBLE FROM GRILLE FOR BALANCING.
7. PROVIDE 10"DEEP SUPPLY AIR PLENUM FOR ALL LINEAR DIFFUSERS.

LIBERTY PLAZA SUITES

500 COMMERCE STREET
HAWTHORNE, NY 10532

ARCHITECT

dimovski architecture PLLC
59 Kensico Road, Thornwood, NY 10594
(914) 747-3500 | (914) 747-3588 fax
www.dimovskiarchitecture.com

STRUCTURAL ENGINEER

CHARLES A. MANGANARO CONSULTING ENGINEERS
A PROFESSIONAL CORPORATION
303 SOUTH BROADWAY, SUITE 223, TARRYTOWN, NY 10591-5488

SHAILESH R. NAIK, P.E.
NEW YORK LICENSE No. 072797-1

MEP ENGINEER

OLA Consulting Engineers
90 Broadway,
Hawthorne, NY 10532
914.747.2800
8 West 38th Street,
Suite 501
New York, NY 10018
646.849.4110
olace.com

NO.	REVISION/ISSUE	DATE
1	DOB COMMENTS	04-26-2021
4	ISSUED FOR PRICING	03-16-2021
3	ISSUED FOR PERMIT	03-12-2021
2	ISSUED FOR PROGRESS 90%	03-05-2021
1.	ISSUED FOR PROGRESS	02-19-2021

SEAL

STATE OF NEW YORK · JOHN TORRE · 071678 · LICENSED PROFESSIONAL ENGINEER

PROJECT

LIBERTY PLAZA SUITES
500 COMMERCE ST.
TOWN OF MT. PLEASANT, NY

DATE:	AUGUST 12, 2020
PROJECT NO:	NDIM0001.00
DRAWN BY:	HLD
CHECKED BY:	RJ
SCALE:	AS NOTED

DRAWING TITLE

MECHANICAL SECOND FLOOR NEW WORK PLAN

SHEET NO.

M2.2

MECHANICAL KEYED NOTES

1. 8x6 TOILET EXHAUST UP AND 6x4 DN IN SHAFT. PROVIDE FIRE DAMPER FOR SHAFT DUCT PENETRATION AT THIS LEVEL.
1.1 6x4 DN IN SHAFT. PROVIDE FIRE DAMPER FOR SHAFT DUCT PENETRATION AT THIS LEVEL.
2. 12x10 KITCHEN EXHAUST UP AND 8x6 DOWN. PROVIDE SUB-DUCT FOR DUCTWORK PENETRATING FIRE RATED WALLS. REFER TO MECHANICAL DETAILS M7.1 & M7.2.
2.1 8x6 DOWN. PROVIDE SUB-DUCT FOR DUCTWORK PENETRATING FIRE RATED WALLS. REFER TO MECHANICAL DETAILS M7.1 & M7.2.
2.2 14x12 KITCHEN EXHAUST UP AND 10x8 DOWN. PROVIDE SUB-DUCT FOR DUCTWORK PENETRATING FIRE RATED WALLS. REFER TO MECHANICAL DETAILS M7.1 & M7.2.
2.3 10x8 DOWN. PROVIDE SUB-DUCT FOR DUCTWORK PENETRATING FIRE RATED WALLS. REFER TO MECHANICAL DETAILS M7.1 & M7.2.
3. 8x6 DN TO KITCHEN HOOD EXHAUST OUTLET. TRANSITION DUCTWORK AS REQUIRED FOR CONNECTION. PROVIDE CEILING RADIATION DAMPER AT RATED CEILING PENETRATION.
4. PROVIDE CAR TYPE DAMPER AND INTERLOCK WITH RANGE HOOD OPERATION. SEE MECHANICAL EQUIPMENT NOTES ON DRAWING M6.1.
5. 4"Ø LAUNDRY EXHAUST UP TO ROOF, TYPICAL FOR 2. DRYER EXHAUST TOTAL DUCT LENGTH AND NUMBER OF BENDS, FROM APPLIANCE OUTLET TO EXHAUST CAP TERMINATION, SHALL NOT EXCEED MANUFACTURER MAXIMUM RECOMMENDED EQUIVALENT LENGTH.
6. ⅝"RS & ⅜"RL UP&DN IN SHAFT, TYPICAL FOR (2) SETS. (1) SET OF RS&RL PIPNG TO ASSOCIATED APARTMENT HEAT PUMP UNIT ON THIS LEVEL.
7. 26x12 SUPPLY AIR UP & 16x10 DN IN SHAFT.
8. 26x12 RETURN AIR UP & 16x10 DN IN SHAFT.
9. 18x10 POINT OF RETURN ABOVE HUNG CEILING, TERMINATE WITH ½"WMS. PROVIDE FIRE DAMPER AND ACCESS DOOR AT SHAFT DUCT PENETRATION.
10. 14x12 SUPPLY UP & 14x8 DN IN SHAFT.
11. 14x12 RETURN UP & 14x8 DN IN SHAFT.
12. 14x10 POINT OF RETURN ABOVE HUNG CEILING, TERMINATE WITH ½"WMS. PROVIDE FIRE DAMPER AND ACCESS DOOR AT SHAFT DUCT PENETRATION.

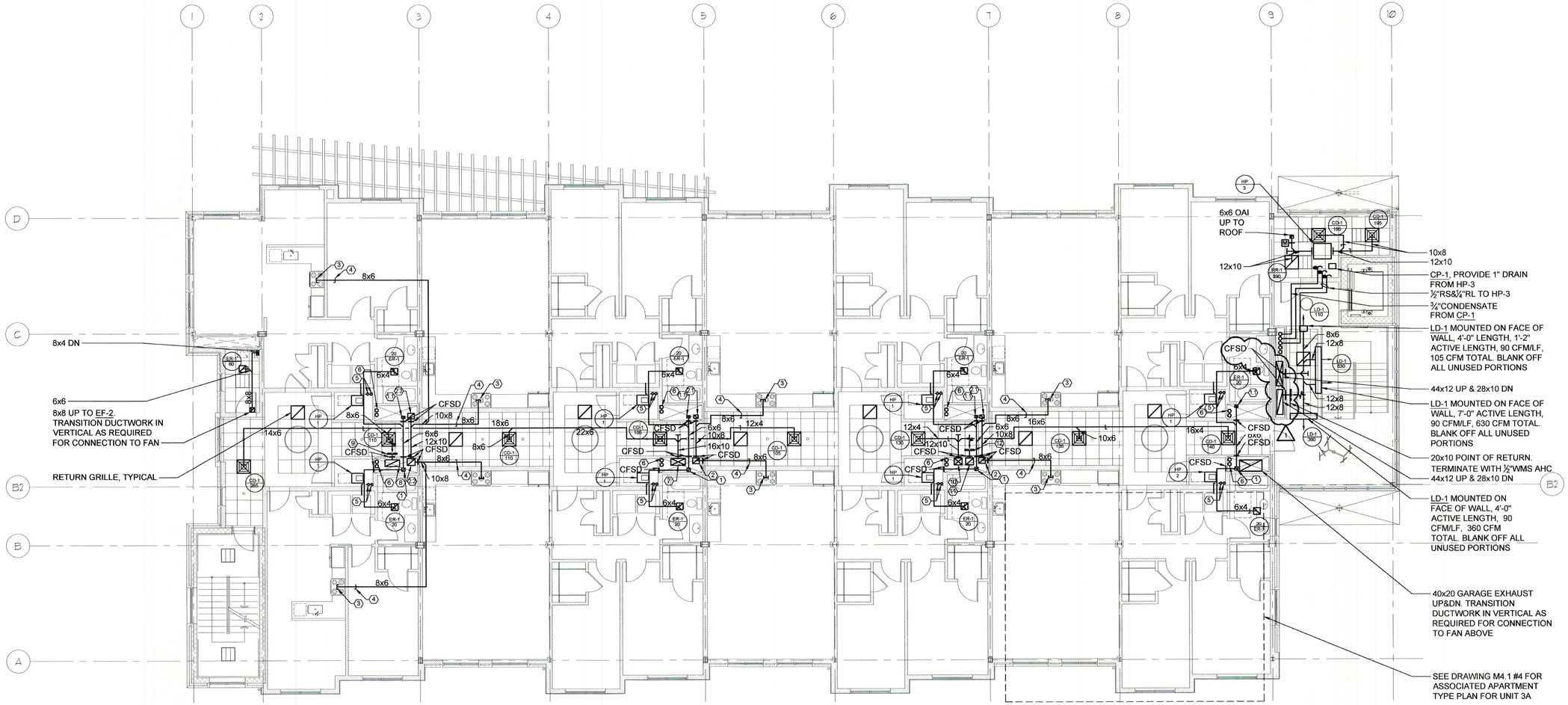

1 MECHANICAL THIRD FLOOR PLAN

SCALE: 1/8" = 1'-0"

NORTH

NOTES:
1. REFER TO APARTMENT TYPE PLANS ON DRAWING M4.1 FOR ASSOCIATED WORK WITHIN APARTMENTS
2. PROVIDE FIRE DAMPERS IN ALL DUCTWORK PENETRATING FIRE RATED WALLS.
3. PROVIDE COMBINATION FIRE/SMOKE DAMPER IN ALL WALLS PENETRATING SMOKE WALLS.
4. REFER TO ARCHITECTURAL DRAWINGS FOR FIRE AND SMOKE WALL LOCATIONS.
5. PROVIDE 10"DEEP SUPPLY AIR PLENUM FOR ALL LINEAR DIFFUSERS.
6. PROVIDE ACCESS DOOR FOR EACH CFSD ABOVE DRY CEILINGS

LIBERTY PLAZA SUITES

500 COMMERCE STREET
HAWTHORNE, NY 10532

ARCHITECT

dimovski architecture P.L.L.C.
59 Kensico Road, Thornwood, NY 10594
(914) 747-3500 | (914) 747-3588 fax
www.dimovskiarchitecture.com

STRUCTURAL ENGINEER

CHARLES A. MANGANARO CONSULTING ENGINEERS
A PROFESSIONAL CORPORATION
303 SOUTH BROADWAY, SUITE 223, TARRYTOWN, NY 10591-5488
SHAILESH R. NAIK, P.E.
NEW YORK LICENSE No. 072797-1

MEP ENGINEER

OLA Consulting Engineers
60 Broadway,
Hawthorne, NY 10532
914.747.2800
8 West 38th Street,
Suite 501
New York, NY 10018
646.646.4710
ola-ce.com

NO.	REVISION/ISSUE	DATE
1	DOB COMMENTS	04-26-2021
4	ISSUED FOR PRICING	03-16-2021
3	ISSUED FOR PERMIT	03-12-2021
2	ISSUED FOR PROGRESS 90%	03-05-2021
1.	ISSUED FOR PROGRESS	02-19-2021

SEAL

STATE OF NEW YORK · JOHN TORRE · 071678 · LICENSED PROFESSIONAL ENGINEER

PROJECT

LIBERTY PLAZA SUITES
500 COMMERCE ST.
TOWN OF MT. PLEASANT, NY

DATE:	AUGUST 12, 2020
PROJECT NO:	NDIM0001.00
DRAWN BY:	HLD
CHECKED BY:	RJ
SCALE:	AS NOTED

DRAWING TITLE

MECHANICAL THIRD FLOOR NEW WORK PLAN

SHEET NO.

M2.3

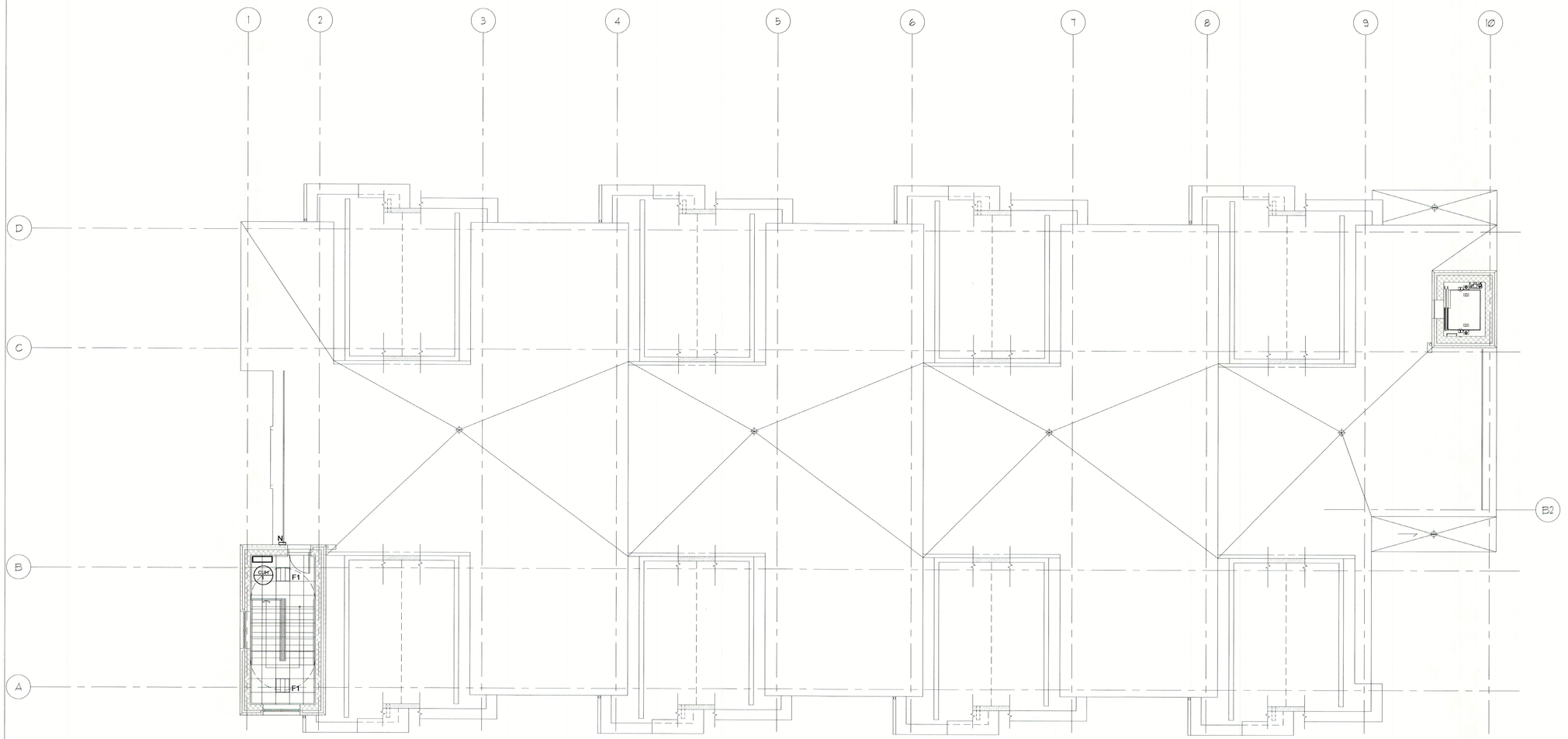

1 MECHANICAL FOURTH FLOOR PLAN
SCALE: 1/8" = 1'-0"

NORTH

LIBERTY PLAZA SUITES

500 COMMERCE STREET
HAWTHORNE, NY 10532

ARCHITECT

dimovski architecture p.c.
59 Kensico Road, Thornwood, NY 10594
(914) 747-3500 | (914) 747-3588 fax
www.dimovskiarchitecture.com

STRUCTURAL ENGINEER

CHARLES A. MANGANARO
CONSULTING ENGINEERS
A PROFESSIONAL CORPORATION
303 SOUTH BROADWAY, SUITE 223, TARRYTOWN, NY 10591-5488

SHAILESH R. NAIK, P.E.
NEW YORK LICENSE No. 072797-1

MEP ENGINEER

OLA Consulting Engineers
50 Broadway,
Hawthorne, NY 10532
914.747.2800
8 West 38th Street,
Suite 501
New York, NY 10018
646.845.4110
ola-ce.com

NO.	REVISION/ISSUE	DATE
5	DOB COMMENTS	04-26-2021
4	ISSUED FOR PRICING	03-16-2021
3	ISSUED FOR PERMIT	03-12-2021
2	ISSUED FOR PROGRESS 90%	03-05-2021
1.	ISSUED FOR PROGRESS	02-19-2021

SEAL

STATE OF NEW YORK
JOHN TORRE
071678
LICENSED PROFESSIONAL ENGINEER

PROJECT

LIBERTY PLAZA SUITES
500 COMMERCE ST.
TOWN OF MT. PLEASANT, NY

DATE:	AUGUST 12, 2020
PROJECT NO:	NDIM0001.00
DRAWN BY:	HLD
CHECKED BY:	RJ
SCALE:	AS NOTED

DRAWING TITLE

MECHANICAL FOURTH LEVEL ROOF PLAN

SHEET NO.

M2.4

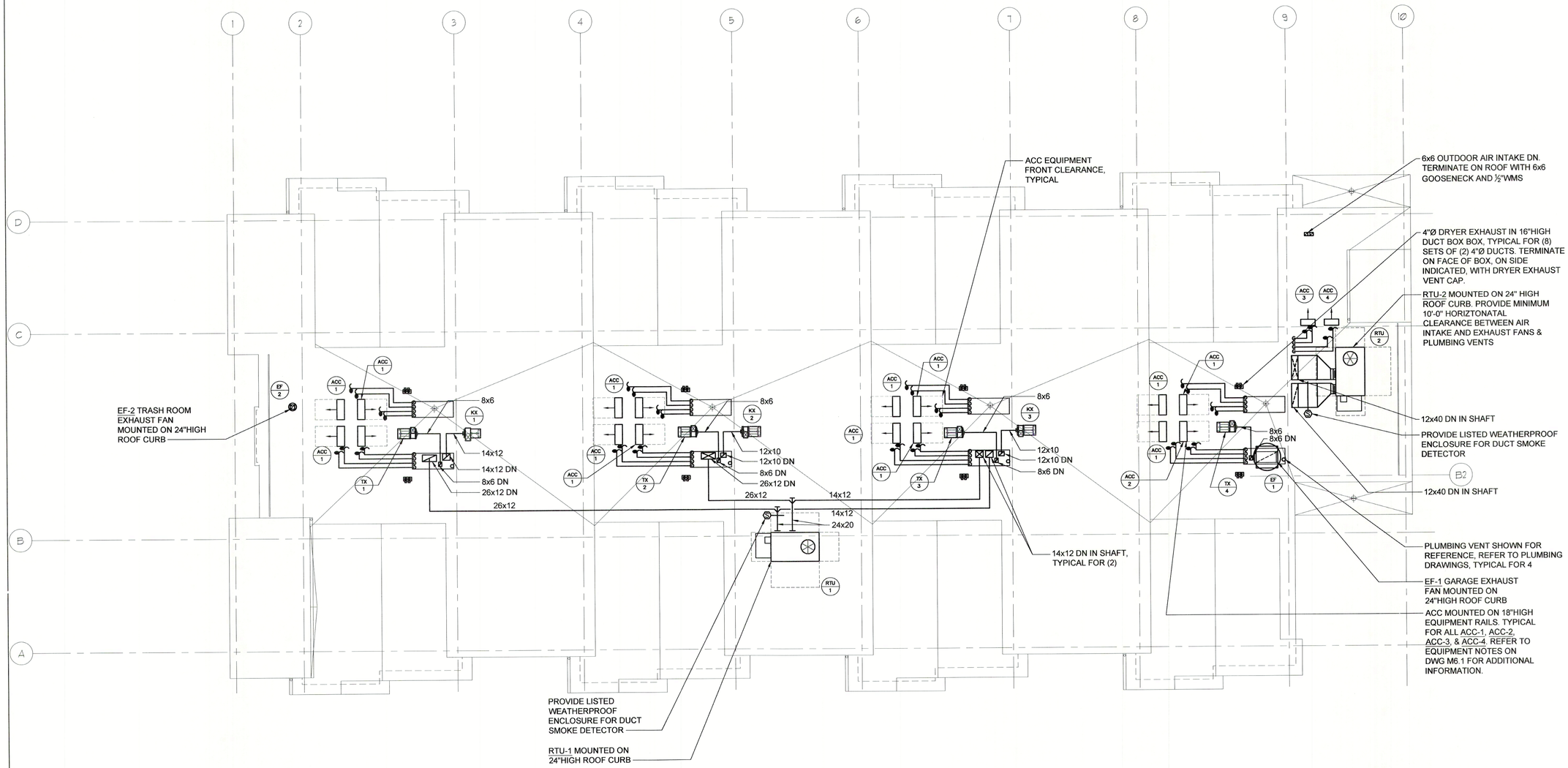

NORTH

1 MECHANICAL ROOF NEW WORK PLAN
SCALE: 1/8" = 1'-0"

LIBERTY PLAZA SUITES

500 COMMERCE STREET
HAWTHORNE, NY 10532

ARCHITECT

dimovski architecture
59 Kensico Road, Thornwood, NY 10594
(914) 747-3500 | (914) 747-3588 fax
www.dimovskiarchitecture.com

STRUCTURAL ENGINEER

CHARLES A. MANGANARO
CONSULTING ENGINEERS
A PROFESSIONAL CORPORATION
303 SOUTH BROADWAY, SUITE 223, TARRYTOWN, NY 10591-5488

SHAILESH R. NAIK, P.E.
NEW YORK LICENSE No. 072797-1

MEP ENGINEER

OLA Consulting Engineers
60 Broadway,
Hawthorne, NY 10532
914.747.2800
8 West 38th Street,
Suite 501
New York, NY 10018
646.848.4110
ola-ce.com

NO.	REVISION/ISSUE	DATE
3	ISSUED FOR PERMIT	03-12-2021
2	ISSUED FOR PROGRESS 90%	03-05-2021
1.	ISSUED FOR PROGRESS	02-19-2021

SEAL

STATE OF NEW YORK
JOHN TOMEE
071678
LICENSED PROFESSIONAL ENGINEER

PROJECT

LIBERTY PLAZA SUITES
500 COMMERCE ST.
TOWN OF MT. PLEASANT, NY

DATE:	AUGUST 12, 2020
PROJECT NO:	NDIM0001.00
DRAWN BY:	HLD
CHECKED BY:	RJ
SCALE:	AS NOTED

DRAWING TITLE

MECHANICAL ROOF NEW WORK PLAN

SHEET NO.

M2.5

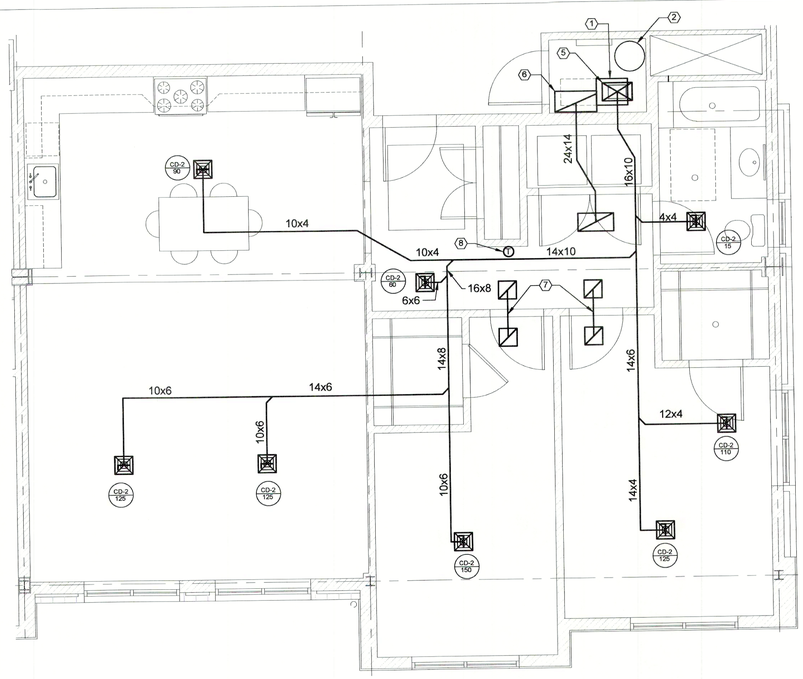

4 APARTMENT 3A PLAN

SCALE: 1/4" = 1'-0"

NOTES:

1. REFER TO FLOOR PLANS M2.2 FOR ASSOCIATED KITCHEN AND TOILET EXHAUST.
2. ALL DAMPERS SHOWN IN APARTMENT SHALL BE ACCESSIBLE FOR BALANCING FROM CEILING DIFFUSER. REFER TO CEILING DIFFUSER SCHEDULE ON DRAWING M6.1.

MECHANICAL KEYED NOTES

1. VERTICAL HEAT PUMP UNIT. PROVIDE 24" FRONT CLEARANCE. REFER TO FLOOR PLANS FOR ASSOCIATED UNIT TAG. PROVIDE ⅝"RS & ⅜" RL PIPING SO UNIT. SEE FLOOR PLANS FOR REFRIGERANT RISER LOCATIONS. PROVIDE ¾"CONDENSATE DRAIN ROUTED TO FLOOR DRAIN IN MER CLOSET. REFER TO PLUMBING PLANS FOR FLOOR DRAIN LOCATION.
2. DOMESTIC WATER HEATER SHOWN FOR REFERENCE. REFER TO PLUMBING DRAWINGS.
3. 14x10 SA DN. TRANSITION DUCTWORK IN VERTICAL AS REQUIRED FOR CONNECTION TO HEAT PUMP UNIT. DUCTWORK SHALL BE CONNECTED TO UNIT WITH FLEXIBLE CONNECTION. OFFSET DUCT ROUTING IN VERTICAL AS REQUIRED TO AVOID BEAM.
4. 22x10 TRANSFER DUCT DN. TERMINATE IN MER APPROXIMATELY 7'-6" AFF WITH ½"WMS. ETERMINATE IN APARTMENT CEILING WITH 24x12 RETURN REGISTER RR-1.
5. 16x10 SA DN. TRANSITION DUCTWORK IN VERTICAL AS REQUIRED FOR CONNECTION TO HEAT PUMP UNIT. DUCTWORK SHALL BE CONNECTED TO UNIT WITH FLEXIBLE CONNECTION. OFFSET DUCT ROUTING IN VERTICAL AS REQUIRED TO AVOID BEAM.
6. 24x14 TRANSFER DUCT DN. TERMINATE IN MER APPROXIMATELY 7'-6" AFF WITH ½"WMS. TERMINATE IN APARTMENT CEILING WITH 24x12 RETURN REGISTER RR-1.
7. 12x8 TRANSFER DUCT, TERMINATE IN CEILING WITH RETURN REGISTER RR-1 ON EACH END.
8. THERMOSTAT ASSOCIATED WITH APARTMENT HEAT PUMP MOUNTED ON WALL. COORDINATE FINAL MOUNTING WITH ARCHITECT.

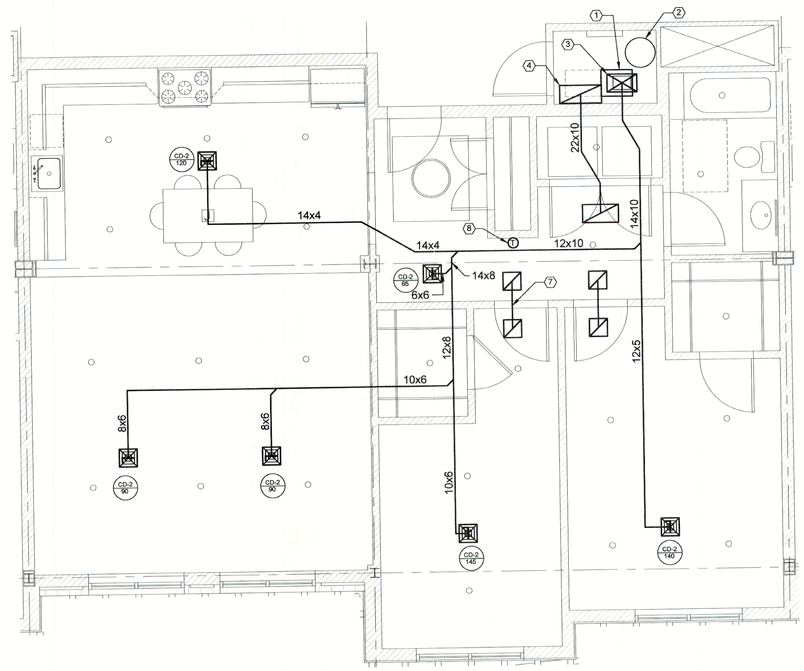

3 TYPICAL TWO BEDROOM APARTMENT PLAN

SCALE: 1/4" = 1'-0"

NOTES:

1. REFER TO FLOOR PLANS M2.1 AND M2.2 FOR ASSOCIATED KITCHEN AND TOILET EXHAUST.
2. ALL DAMPERS SHOWN IN APARTMENT SHALL BE ACCESSIBLE FOR BALANCING FROM CEILING DIFFUSER. REFER TO CEILING DIFFUSER SCHEDULE ON DRAWING M6.1.
3. SEE DRAWING M4.1 #4 FOR APARTMENT TYPE PLAN ASSOCIATED WITH UNIT 3A.

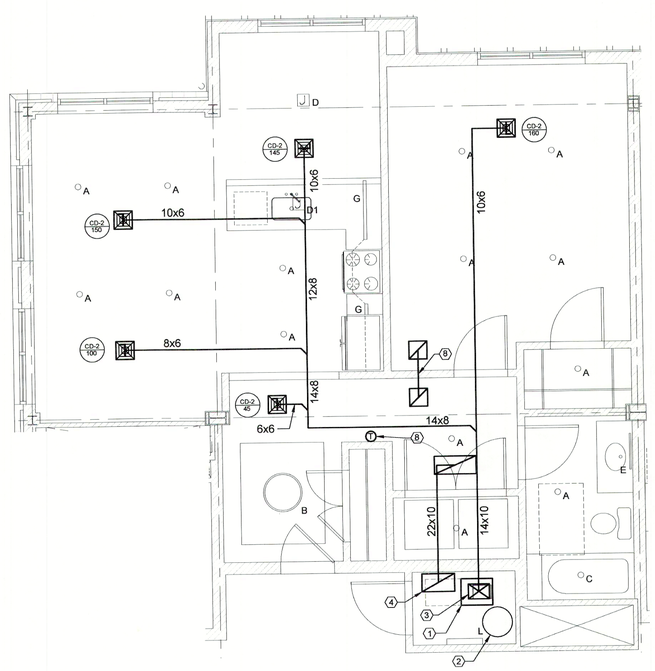

2 TYPICAL TYPE B ONE BEDROOM APARTMENT PLAN

SCALE: 1/4" = 1'-0"

NOTES:

1. REFER TO FLOOR PLANS M2.1 AND M2.2 FOR ASSOCIATED KITCHEN AND TOILET EXHAUST.
2. ALL DAMPERS SHOWN IN APARTMENT SHALL BE ACCESSIBLE FOR BALANCING FROM CEILING DIFFUSER. REFER TO CEILING DIFFUSER SCHEDULE ON DRAWING M6.1.

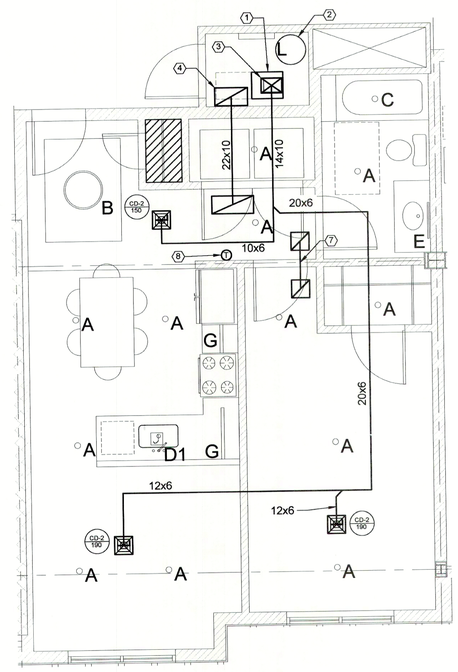

1 TYPICAL TYPE A ONE BEDROOM APARTMENT PLAN

SCALE: 1/4" = 1'-0"

NOTES:

1. REFER TO FLOOR PLANS M2.1 AND M2.2 FOR ASSOCIATED KITCHEN AND TOILET EXHAUST.
2. ALL DAMPERS SHOWN IN APARTMENT SHALL BE ACCESSIBLE FOR BALANCING FROM CEILING DIFFUSER. REFER TO CEILING DIFFUSER SCHEDULE ON DRAWING M6.1.

LIBERTY PLAZA SUITES

500 COMMERCE STREET
HAWTHORNE, NY 10532

ARCHITECT

dimovski architecture PLLC
59 Kensico Road, Thornwood, NY 10594
(914) 747-3500 | (914) 747-3588 fax
www.dimovskiarchitecture.com

STRUCTURAL ENGINEER

CHARLES A. MANGANARO CONSULTING ENGINEERS
A PROFESSIONAL CORPORATION
303 SOUTH BROADWAY, SUITE 223, TARRYTOWN, NY 10591-5488

SHAILESH R. NAIK, P.E.
NEW YORK LICENSE No. 072797-1

MEP ENGINEER

OLA Consulting Engineers
60 Broadway,
Hawthorne, NY 10532
914.747.2900
8 West 38th Street,
Suite 901
New York, NY 10018
646.849.4110
ola-ce.com

NO.	REVISION/ISSUE	DATE
3	ISSUED FOR PERMIT	03-12-2021
2	ISSUED FOR PROGRESS 90%	03-05-2021
1.	ISSUED FOR PROGRESS	02-19-2021

SEAL

STATE OF NEW YORK · JOHN TORRE · LICENSED PROFESSIONAL ENGINEER · 071678

PROJECT

LIBERTY PLAZA SUITES
500 COMMERCE ST.
TOWN OF MT. PLEASANT, NY

DATE:	AUGUST 12, 2020
PROJECT NO:	NDIM0001.00
DRAWN BY:	CT
CHECKED BY:	KS/DS
SCALE:	AS NOTED

DRAWING TITLE

MECHANICAL TYPICAL APARTMENT TYPE PLANS

SHEET NO.

M4.1

SPLIT SYSTEM AC UNIT SCHEDULE

INDOOR UNIT DESIGNATION	HP–1	HP-2	HP-3	HP-4
LOCATION	APARTMENT MER	APARTMENT MER	SEE PLANS	SEE PLANS
AREA SERVED	SEE PLANS	SEE PLANS	SEE PLANS	SEE PLANS
MODEL	FTQ18TAVJUA	FTQ24TAVJUA	FDMQ15RVJU	FDMQ09RVJU
UNIT SIZE (TONS)	1.5	2	1.25	.75
EVAPORATOR FAN:				
CFM	600	800	438	290
MIN OA CFM	-	-	360	240
ESP (IN H_2O)	0.9	0.9	-	-
VOLTS/Ø/Hz	208/1/60	208/1/60	208/1/60	208/1/60
WATTS	-	-	230	130
MCA/MOCP	4.9 / 15	4.9 / 15	-	-
FLA	-	-	0.87	0.63
COOLING:				
E.A.T. (°F) DB/WB				
L.A.T. (°F) DB/WB				
EER/SEER	12.5 / 15.5	10.30 / 15.2	12.7 / 20.2	11.1 / 17.8
SENS. CAP. (MBH)	12.7	16.9	11.7	7.6
TOTAL CAP. (MBH)	18	24	14.4	9
HEATING:				
E.W.T./L.W.T. (°F)				
E.A.T./L.A.T. (°F)				
CAPACITY (MBH)	20	27	18	10.9
HEATING POWER INPUT (kW)	.22	.27	-	-
HSPF	-	-	10.3	10.3
COP	-	-	3.8	4.1
FILTER DATA:				
MERV	-	-	13	13
CONDENSING UNIT DESIGNATION	ACC-1	ACC-2	ACC-3	ACC-4
MODEL	RZQ18TAVJU	RZQ24TAVJUA	RX15RMVJU	RX09RMVJU9
CFM	2682	2862	2313	1105
REFRIGERANT TYPE	R-410a	R-410a	R-410a	R-410a
VOLTS/Ø/Hz	208/1/60	208/1/60		
MCA/MOCP	16.5 / 25	16.5 / 20	9.7 / -	9 / -
MFA	-	-	15	15
WEIGHT (LBS.)	172	172	97	60

NOTES:
1. UNITS BASED ON DAIKIN.
2. UNITS SHALL BE FURNISHED WITH LOW-AMBIENT KITS, WINTER START CONTROL, AND CRANKCASE HEATERS.
3. PROVIDE WIND BAFFLE AND SNOW STAND KITS FOR UNITS.
4. PROVIDE PLENUM RATED CONDENSATE PUMP FOR HP-4 & HP-5 INDOOR UNIT.
5. ALL OUTDOOR UNITS SHALL BE MOUNTED ON 24" HIGH EQUIPMENT RAILS. SEE MECHANICAL EQUIPMENT NOTES.

ELECTRIC UNIT HEATER SCHEDULE

DESIGNATION	EUH-1	EUH-2
LOCATION	ELECTRICAL ROOM	WATER SERVICE ROOM
MODEL	EGEB	EGW
UNIT SIZE	3	02
FAN:		
CFM	310	300
RPM	1490	-
MOTOR HP	1/50	-
ELECTRIC HEATING COIL:		
HEATING CAPACITY (W)	3000	1500
CAPACITY (MBH)	10	5.118
WEIGHT (LBS)	40	20
ELECTRICAL DATA:		
VOLTS/Ø/Hz	208/1/60	208/1/60
FLA		-

NOTES:
1. UNIT HEATER BASED ON REZNOR.
2. PROVIDE THERMOSTAT FOR EACH.
3. SUSPEND ALL UNIT HEATERS FROM STRUCTURE WITH SPRING ISOLATORS.
4. FURNISH DISCONNECT SWITCH FOR EACH UNIT.

ELECTRIC CABINET UNIT HEATER SCHEDULE

DESIGNATION	CUH-1	
MODEL	FFJ	
SIZE	03	
STYLE	MODEL J - VERTICAL CABINET SLOPE TOP	
LOCATION	STAIRWELL - SEE PLANS	
2-STAGE HEATING CAPACITY (KW)	2.0 / 4.5	
HEATER AMPS	12.6	
VOLTS/Ø/Hz	208/3/60	

NOTES:

1.) CABINET UNIT HEATERS SHALL BE BASED ON TRANE FORCE FLO CABINET HEATER. HEATER SHALL BE PROVIDED WITH THE FOLLOWING:
- UNIT MOUNTED DISCONNECT SWITCH
- 1" THROWAWAY FILTERS (PROVIDE EXTRA SET OF FILTERS)
- TAMPERPROOF LOCKING ACCESS DOOR AND PANELS
- UNIT MOUNTED ZONE SENSOR WITH FAN MODE SWITCH "OFF-AUTO-LOW-MED-HIGH" AND TEMPERATURE SETPOINT.
- TRACER CONTROLS ZN520 STAND ALON MICROPROCESSOR CONTROLLER.
- UNIT FINISH SHALL BE SELECTED FROM MANUFACTURERS COLOR CHART BY ARCHITECT, SUBMIT COLOR CHART
- TWO BOTTOM STAMPED LOUVERS (INLET AND OUTLET)

FAN SCHEDULE

DESIGNATION	TX-1, TX-2, TX-3, TX-4	KX-1	KX-2 & KX-3	EF-1	EF-2
LOCATION	ROOF	ROOF	ROOF	ROOF	ROOF
AREA SERVED	TOILET ROOMS, SEE PLANS	KITCHEN HOOD, SEE PLANS	KITCHEN HOOD, SEE PLANS	GARAGE	TRASH ROOMS
MODEL	USF-7-5-B1	USF-10-5-B1	USF-8	CUBE-300	G-080-VG
FAN TYPE	BLOWER	BLOWER	BLOWER	ROOFTOP	ROOFTOP
FAN STYLE	10-UB-CW	10-UB-CW	10-UB-CW	UPBLAST	DOWNBLAST
DRIVE TYPE	BELT	BELT	BELT	BELT	DIRECT
CFM	80	800	400	7811	120
HP	¼	¼	¼	3	1/6
OPERATING HP	0.02	0.14	0.08	2	0.02
FAN RPM	844	1,509	1381	647	1036
TOTAL EXTERNAL SP (IN. WG)	0.22	0.3	0.3	0.8	0.25
VOLTS/Ø/Hz	208 / 3 / 60	208 / 3 / 60	208 / 3 / 60	208/3/60	208/1/60
FLA	2.4	2.4	2.4	-	-
STARTER TYPE	-	VFD	VFD	VFD	-

NOTES:
1. FANS BASED ON GREENHECK.
2. ALL MOTORS SHALL BE PREMIUM EFFICIENCY, DIRECT DRIVE.
3. FURNISH WEATHERPROOF MOTOR STARTERS FOR EACH FAN
4. FURNISH RUBBER IN SHEAR OR SPRING VIBRATION ISOLATORS AS PER THE SPECIFICATION
5. FURNISH 24" HIGH ROOF CURB WITH BACK DRAFT DAMPER FOR ALL ROOF MOUNTED FANS
6. ALL OUTDOOR FANS SHALL BE FURNISHED WITH UNIT MOUNTED WEATHER PROOF DISCONNECT SWITCH.
7. PROVIDE VFD FOR FANS KX-1, KX-2, KX-3, AND EF-1. VFD SHALL BE WEATHERPROOF.
8. FAN MOTOR STARTERS SHALL BE LOCATED ON FIRST FLOOR WATER METER ROOM.

PACKAGED ROOFTOP AC UNIT SCHEDULE

DESIGNATION	RTU-1	RTU-2
LOCATION	ROOF	ROOF
AREA SERVED	CORRIDORS - LEVEL 2 AND 3	LOBBY - SEE PLANS
MANUFACTURER	TRANE	TRANE
MODEL	YHC067E3RXA	YHC092F3RXA
NOMINAL CAPACITY (TONS)	5	7.5
WEIGHT OF UNIT (LBS)	999	1026
EER / SEER	13 / 17.2	12.6 / 15
DESIGN DATA:		
SUPPLY AIR (CFM)	2000	3000
OUTDOOR AIR (CFM)	165	80
RETURN AIR (CFM)	2000	3000
COMPRESSOR:		
COMPRESSOR No./TYPE	1	2
HORSEPOWER	4.3	4.1 / 2.4
COMPRESSOR RLA (AMPS) EA.	16.2	15.9 / 10
EVAPORATOR COIL:		
E.A.T. (°F) DB/WB	79.4 / 68.3	77.5 / 66.3
L.A.T. (°F) DB/WB	61.69 / 59.31	59.3 / 56.95
MOISTURE REMOVAL RATE (GPH)	2.22	3.08
SENS./TOTAL CAPACITY (MBH)	41.49 / 61.09	63.54 / 90.79
INDIRECT GAS-FIRED FURNACE:		
FUEL	NATURAL GAS	NATURAL GAS
No. OF STAGES	1	1
OUTPUT (MBH)	49	96
OUTPUT W/ FANS (MBH)	51.72	99.54
HEATING EAT	61.1	68.6
HEATING LAT	84.1	98.5
HEATING TEMP RISE	23	29.9
SUPPLY FAN:		
CFM	2000	3000
ESP (IN H_2O)	.750	.600
BHP/HP	.91 / 1	1.22 / 2.75
RPM	1097	1219
FILTERS:		
RETURN AIR FILTER TYPE	THROWAWAY	THROWAWAY
FILTER QUANTITY / SIZE	4 / 16"x25"x2"	4 / 20"x25"x2"
ELECTRICAL:		
VOLT/Ø/HZ	208-230/3/60	208-230/3/60
MCA / MOP (AMPS)	33 / 45	42 / 50

NOTES:
1. PROVIDE THE FOLLOWING OPTIONS FOR ALL UNITS:
- HIGH STATIC DRIVE MOTOR. COORDINATE LEFT/RIGHT HAND FAN DRIVE IN FIELD.
- UNITS SHALL BE HIGH EFFICIENCY.
- TEMP ULTRA LOW LEAK ECONOMIZER WITH BARO RELIEF
- FURNISH EXTRA DRIVE BELT AND EXTRA FILTER SET FOR EACH UNIT.
- UNIT SHALL BE MOUNTED ON 14" HIGH VIBRATION ISOLATION ROOF CURB. (HEIGHT INCLUDES BASE CURB AND VIBRATION ISOLATION RAILS.)
- HIGH CAPACITY INDIRECT GAS-FIRED FURNACE.
- POWER EXHAUST FAN, ARRANGED TO RUN IN ECONOMIZER MODE, WITH BAROMETRIC RELIEF WHEN ECONOMIZER IS NOT ENABLED.
- PROVIDE 2 EXTRA SETS OF BELT & FILTER.

2. PROVIDE THE FOLLOWING MOTOR CONTROL OPTIONS FOR ALL UNITS:
- UNITARY CONTROLLER BY AUTOMATIC TEMPERATURE CONTROLS MANUFACTURER, COMPATIBLE WITH THE BUILDING AUTOMATION SYSTEM.
- ALL MOTORS 1 HP OR GREATER SHALL BE PREMIUM EFFICIENCY. ALL MOTORS FURNISHED WITH VARIABLE FREQUENCY DRIVES SHALL BE INVERTER DUTY RATED & APPROVED FOR VARIABLE SPEED AND TORQUE APPLICATIONS.
- SINGLE POINT EXTERNAL POWER CONNECTION AT UNIT, UNIT-MOUNTED DISCONNECT SWITCH, AND FACTORY INSTALLED MOTOR STARTERS. VAV UNITS SHALL HAVE FACTORY MOUNTED VFD'S WITH H-O-A.

EQUIPMENT NOTES:

1. NOT USED
2. KITCHEN EXHAUST ZONE REGISTER TERMINAL: SHALL BE BASED ON ALDES ZRT-1 WITH OPTIONAL CAR-II MAXIMUM FLOW REGULATOR, SIZE 6"Ø. PROVIDE MOUNTING BRACKET, DAMPER ASSEMBLY, DAMPER MOTOR COVER, AND INTEGRAL EXHAUST/RETURN GRILLE. MAXIMUM CFM SHALL BE 100 CFM, MINIMUM CFM IS ZERO. ~~PROVIDE CURRENT SENSOR IN KITCHEN HOOD WIRING TO OPERATE DAMPER.~~ DAMPER SHALL OPEN UPON ACTIVATION OF KITCHEN HOOD.
3. NOT USED
4. DRYER EXHAUST VENT CAP: BASED ON BROAN MODEL WC650, 4"WALL CAP.
5. AIR COOLED CONDENSING UNIT SUPPORT RAILS: SHALL BE BASED THYBAR MODEL TEMS-3 24" STANDARD HEIGHT. CONSTRUCTION SHALL BE WELDED 18 GAUGE GALVANIZED STEEL SHELL, BASE PLATE AND COUNTER FLASHING WITH FACTORY INSTALLED 2"x4" WOOD NAILER AND INTERNAL BULKHEAD REINFORCEMENT. RAIL LENGTH TO EXTEND MINIMUM 6" ON BOTH ENDS OF CONDENSING UNIT.
6. LD-1 LINEAR DIFFUSER BASED ON TITUS FL-10, SINGLE SLOT, 2" SLOT WIDTH. ACTIVE LENGTH SHALL BE AS NOTED IN DRAWING. BLANK OFF ALL UNUSED PORTIONS OF LINEAR DIFFUSER. COORDINATE ALL MOUNTING WITH CEILING OR WALL TYPE. COORDINATE TOTAL LINEAR LENGTHS WITH ARCHITECT.
7. CP-1 PLENUM RATED CONDENSATE PUMP SHALL BE BASED ON LITTLE GIANT MODEL VCC-20-P, LOW PROFILE TANK HEIGHT, AUTOMATIC START AND STOP SWITCH, 115V/1PH/60 HZ, 1.5 AMPS, 1/30 HP, 93 WATTS, 70 GPM AT 5' OF HEAD, SHUT OFF HEAT AT 20FT, 8.6 PSI, 4.5 LBS. PUMP MEETS UL 2043 AND IS LABELED FOR PLENUM APPLICATIONS.

RETURN/EXHAUST REGISTER AND GRILLE SCHEDULE

DESIGNATION	RR-1 / ER-1 / RG-1		-		-	
MODEL	3 FL					
MAX NK VEL (FT/MIN)	500					
MAX NC	25					
CONSTRUCTION	ALUMINUM					
BORDER/FRAME	SURFACE MOUNTED					
DEFLECTION	45° FIXED					
SPACING	3/4					
	CFM RANGE	NOMINAL NECK SIZE	CFM RANGE	NOMINAL NECK SIZE	CFM RANGE	NOMINAL NECK SIZE
	0-150	8x8				
	151-250	10x10				
	251-350	12x12				
	351-725	18x18				
	726-950	22x22				
	951-1100	24x24				
	1101-1400	24x30				
	1401-1700	24x36				
	1701-2000	28x36				
	2001-2300	30x36				

NOTES:
1. REGISTERS ARE BASED ON TITUS.
2. THE ABOVE SCHEDULE INDICATES NOMINAL REGISTER NECK SIZES. THE CONTRACTOR SHALL COORDINATE THE REGISTER SIZE IN THE FIELD ACCORDING TO THE ACTUAL DUCT DIMENSIONS AND MAINTAIN AN EQUIVALENT CORE AREA.
3. ALL REGISTERS SHALL BE EQUIPPED WITH AN OPPOSED BLADE VOLUME DAMPER.
4. SUBMIT COLOR CHART FOR REVIEW AND APPROVAL.
5. RETURN REGISTERS SHALL HAVE FRAMES AND BORDERS SUITABLE FOR THE CONSTRUCTION IN WHICH THEY WILL BE INSTALLED. CONTRACTOR TO COORDINATE.
6. PROVIDE CEILING RADIATION DAMPER FOR ALL REGISTERS.

CEILING DIFFUSER SCHEDULE

DESIGNATION	CD-1		CD-2		-	
MODEL	OMNI		OMNI			
MAX CORE VEL (FT/MIN)	550		550			
MAX NC	25		25			
CONSTRUCTION	STEEL		STEEL			
FRAME	SURFACE MOUNT OR LAY IN		SURFACE MOUNT			
DEFLECTION	SEE PLANS		SEE PLANS			
FACE SIZE	SEE PLANS		12x12			
CEILING RADIATION DAMPER	CRD-2WT		CRD-2WT			
	CFM RANGE	NECK SIZE Ø	CFM RANGE	NECK SIZE Ø		
	0-100	6"	0-100	6"		
	101-200	8"	101-200	8"		
	201-350	10"	201-350	10"		
	351-450	12"	-	-		
	451-600	14"	-	-		
	601-700	15"	-	-		

NOTES:
1. CEILING SUPPLY DIFFUSERS ARE BASED ON TITUS. CEILING RADIATION DAMPERS ARE BASED ON GREENHECK.
2. ALL DIFFUSERS SHALL BE EQUIPPED WITH AN OPPOSED BLADE VOLUME DAMPER.
3. COORDINATE COLOR SELECTION WITH ARCH PLANS.
4. SUPPLY DIFFUSERS SHALL HAVE FRAMES AND BORDERS SUITABLE FOR THE CONSTRUCTION IN WHICH THEY WILL BE INSTALLED, CONTRACTOR TO COORDINATE.
5. ALL LAY-IN DIFFUSERS SHALL HAVE A MODULE SIZE OF 12x12. FACE SIZES SHOWN IN SCHEDULE ARE FOR SURFACE MOUNT DIFFUSERS. NECK SIZES VARY ACCORDING TO THE SCHEDULE.
6. DIFFUSER BLOW PATTERN IS AS SHOWN ON DRAWINGS.
7. PROVIDE CEILING RADIATION DAMPER FOR ALL DIFFUSERS.

LIBERTY PLAZA SUITES

500 COMMERCE STREET
HAWTHORNE, NY 10532

ARCHITECT

dimovskiarchitecture P.L.L.C.
59 Kensico Road, Thornwood, NY 10594
(914) 747-3500 | (914) 747-3588 fax
www.dimovskiarchitecture.com

STRUCTURAL ENGINEER

CHARLES A. MANGANARO CONSULTING ENGINEERS
A PROFESSIONAL CORPORATION
303 SOUTH BROADWAY, SUITE 223, TARRYTOWN, NY 10591–5488
SHAILESH R. NAIK, P.E.
NEW YORK LICENSE No. 072797-1

MEP ENGINEER

OLA Consulting Engineers
50 Broadway
Hawthorne, NY 10532
914.747.2800
5 West 58th Street,
Suite 501
New York, NY 10019
646.849.4110
ola-ce.com

NO.	REVISION/ISSUE	DATE
1	DOB COMMENTS	04-26-2021
4	ISSUED FOR PRICING	03-16-2021
3	ISSUED FOR PERMIT	03-12-2021
2	ISSUED FOR PROGRESS 90%	03-05-2021
1.	ISSUED FOR PROGRESS	02-19-2021

SEAL

STATE OF NEW YORK · JOHN TOMASSI · LICENSED PROFESSIONAL ENGINEER · 071678

PROJECT

LIBERTY PLAZA SUITES
500 COMMERCE ST.
TOWN OF MT. PLEASANT, NY

DATE:	AUGUST 12, 2020
PROJECT NO:	NDIM0001.00
DRAWN BY:	HLD
CHECKED BY:	RJ
SCALE:	AS NOTED

DRAWING TITLE

MECHANICAL SCHEDULES

SHEET NO.

M6.1

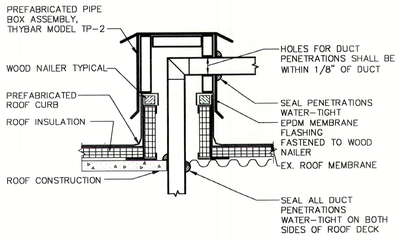

NOTES:

1.) PREFABRICATED ROOF CURB SHALL BE BASED ON THYBAR MODEL TC-3 INSULATED ROOF CURB WITH BUILT IN 3" CANT AND VARIABLE STEP TO MATCH DECK INSULATION THICKNESS. ROOF CURBS SHALL BE CONSTRUCTED OF 18 GAUGE GALVANIZED STEEL CONSTRUCTION WITH WELDED CORNERS AND 3" CANT FULLY MITERED WITH SEAMS JOINED BY CONTINUOUS WELDS. CURB SHALL BE FACTORY INSULATED WITH 1-1/2" THICK 3# DENSITY INSULATION AND ASSEMBLED WITH 2x2 WOOD NAILERS.

2.) CONTRACTOR SHALL PROVIDE ALL FLASHING, COUNTERFLASHING, AND ANY OTHER MATERIALS AND LABOR NECESSARY TO ENSURE A WATERTIGHT ROOF PENETRATION ENCLOSURE.

3.) FOR PENETRATION THROUGH CONCRETE DECKS, CORE DRILL HOLE AND FURNISH DUCT SLEEVE AND RISER SUPPORT AS REQUIRED BY THE SPECIFICATIONS

4.) USE ONLY THOSE MATERIALS COMPATIBLE WITH THE EXISTING ROOFING SYSTEM.

10 ROOF DUCT BOX DETAIL
SCALE: NONE

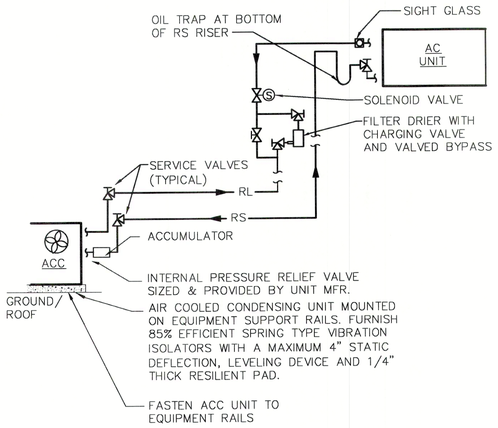

NOTES:

1.) PROVIDE TRAPS AS FOLLOWS:
- A. FOR RISES UP TO 50', USE 1 TRAP AT THE BOTTOM OF THE SUCTION RISER.
- B. FOR RISES BETWEEN 50' AND 100', INSTALL A SECOND TRAP HALF WAY UP THE RISER.

2.) REFRIGERANT PIPING SHALL BE INSTALLED SO THAT THEY WILL NOT OBSTRUCT SERVICE ACCESS TO EITHER THE INDOOR COIL OR CONDENSING UNIT, THE AIR HANDLER IN GENERAL OR THE FILTER.

3.) SLOPE HORIZONTAL SUCTION LINES APPROX. 1" EVERY 20 FEET TOWARD THE CONDENSING UNIT TO FACILITATE OIL RETURN.

4.) ALL FASTENERS AND SUPPORTS LOCATED OUTDOORS SHALL BE GALVANIZED

8 REFRIGERANT PIPING DETAIL
SCALE: NONE

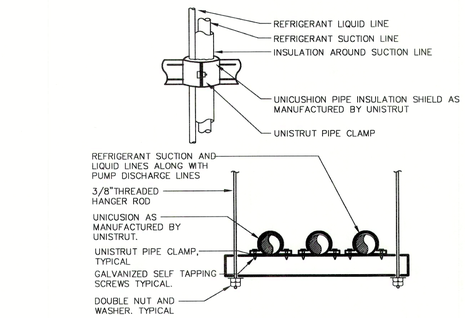

NOTES:

1.) LIQUID AND SUCTION LINES MAY BE ROUTED TOGETHER FOR CONVENIENCE, BUT MUST BE COMPLETELY INSULATED FROM EACH OTHER. DO NOT SOLDER LIQUID AND SUCTION LINES TOGETHER. DO NOT ALLOW METAL TO METAL CONTACT.
2.) LINES SHOULD BE INSTALLED WITH AS FEW BENDS AS POSSIBLE, ALLOWING SERVICE ACCESS TO THE INDOOR COIL.
3.) USE LONG RADIUS ELBOWS WHEREVER POSSIBLE, EXCEPT IN OIL RETURN TRAPS, WHERE SHORT RADIUS ELBOWS SHOULD BE USED.
4.) SLOPE HORIZONTAL SUCTION LINES 1 INCH EVERY 20 FEET TOWARD THE OUTDOOR UNIT.

6 REFRIGERANT PIPE SUPPORT DETAIL
SCALE: NONE

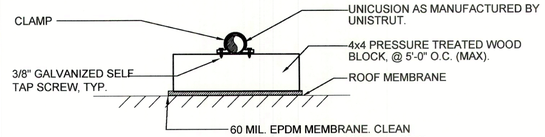

NOTE:
1. ALL ROOFING WORK TO BE DONE BY THE BONDED ROOF CONTRACTOR.
2. USE ONLY THOSE MATERIALS COMPATIBLE WITH THE EXISTING ROOF SYSTEM.

3 ROOF PIPE SUPPORT DETAIL
SCALE: NONE

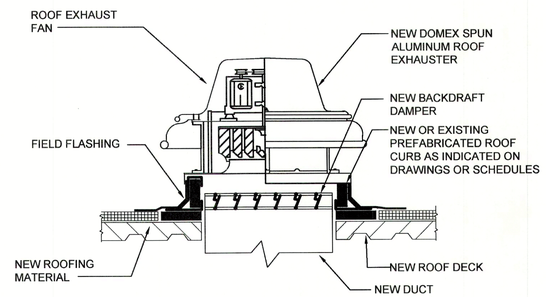

NOTE:
1. ARRANGEMENT IS SIMILAR FOR UP BLAST TYPE FAN AND LINEAR FANS.
2. UP BLAST KITCHEN EXHAUST FAN SHALL NOT HAVE A BACK DRAFT DAMPER.
3. SEE ARCH. DRAWINGS FOR FLASHING AND COUNTER FLASHING DETAILS

5 ROOF TOP EXHAUST FAN DETAIL
SCALE: NONE

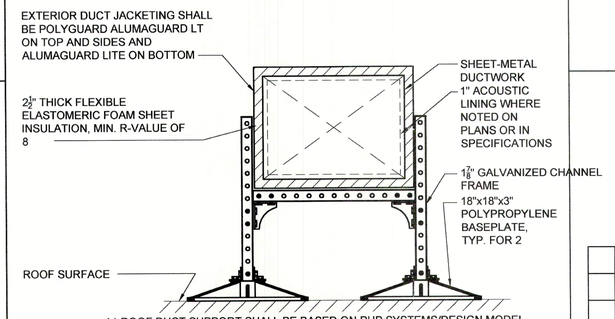

1.) ROOF DUCT SUPPORT SHALL BE BASED ON PHP SYSTEMS/DESIGN MODEL NUMBER PHP-D.

2.) ALL BRACKETS, HANGERS, FASTENERS AND SUPPORTS LOCATED OUTDOORS SHALL BE GALVANIZED OR NICKEL PLATED

3.) USE ONLY THOSE MATERIALS COMPATIBLE WITH THE EXISTING ROOFING SYSTEM.

4.) SEAL ALL EXTERIOR DUCTWORK IN ACCORDANCE WITH SMACNA HVAC DUCT CONSTRUCTION STANDARDS METAL AND FLEXIBLE-SEAL CLASS A

2 ROOF DUCT SUPPORT DETAIL
SCALE: NONE

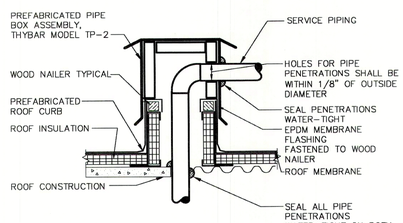

NOTES:

1.) PREFABRICATED ROOF CURB SHALL BE BASED ON THYBAR MODEL TC-3 INSULATED ROOF CURB WITH BUILT IN 3" CANT AND VARIABLE STEP TO MATCH DECK INSULATION THICKNESS. ROOF CURBS SHALL BE CONSTRUCTED OF 18 GAUGE GALVANIZED STEEL CONSTRUCTION WITH WELDED CORNERS AND 3" CANT FULLY MITERED WITH SEAMS JOINED BY CONTINUOUS WELDS. CURB SHALL BE FACTORY INSULATED WITH 1-1/2" THICK 3# DENSITY INSULATION AND ASSEMBLED WITH 2x2 WOOD NAILERS.

2.) CONTRACTOR SHALL PROVIDE ALL FLASHING, COUNTERFLASHING, AND ANY OTHER MATERIALS AND LABOR NECESSARY TO ENSURE A WATERTIGHT ROOF PENETRATION ENCLOSURE.

3.) FOR PENETRATION THROUGH CONCRETE DECKS, CORE DRILL HOLE AND FURNISH PIPE SLEEVE AND RISER CLAMP AS REQUIRED BY THE SPECIFICATIONS

4.) THIS DETAIL USED FOR ALL REFRIGERANT PIPING PENETRATIONS THROUGH ROOF.

5.) USE ONLY THOSE MATERIALS COMPATIBLE WITH THE EXISTING ROOFING SYSTEM.

9 ROOF PIPE BOX DETAIL
SCALE: NONE

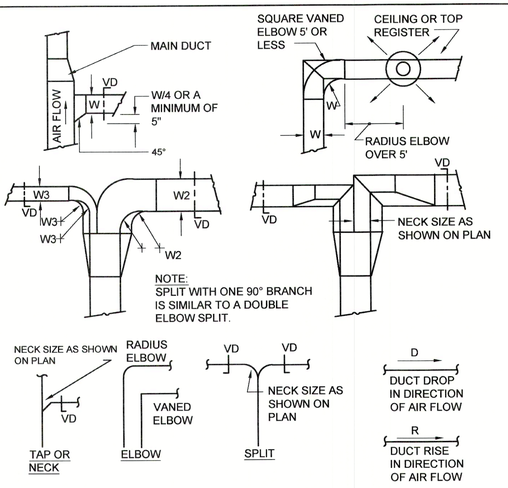

NOTES:
1.) SINGLE LINE REPRESENTATIONS REFER TO DOUBLE LINE DETAILS.
2.) USE RADIUS OR SQUARE VANED BENDS FOR BOTH ELBOWS AND SPLITS AS DETERMINED BY SPACE LIMITATIONS, AND THE DISTANCE FROM AIR OUTLETS.
3.) ALL SQUARE ELBOWS SHALL HAVE FACTORY TURNING VANES, AND MAINTAIN A CONSTANT WIDTH.
4.) WHERE DUCTS SPLIT, THE SOLID LINE REPRESENTATION IS PREFERRED, UNLESS PRECLUDED BY SPACE, OR OTHERWISE INDICATED.
5.) USE ELBOW SPLIT FOR BRANCH CONNECTIONS ONLY WHERE NECK SIZE IS GIVEN.

7 DUCT BRANCH TAKE-OFF DETAIL
SCALE: NONE

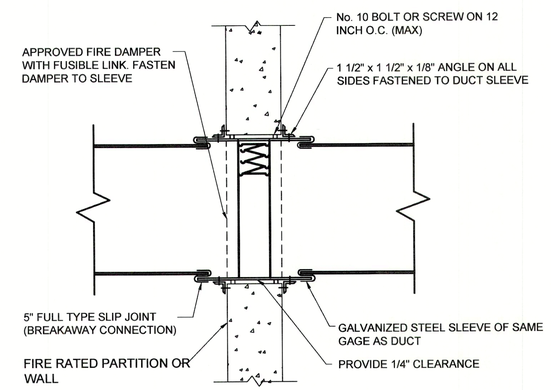

NOTES:

1.FIRE DAMPERS TO BE CONSTRUCTED AND INSTALLED ACCORDING TO NFPA 90A UL LABELS.

2. MULTI-BLADE PIVOTED FIRE AMPERS MEETING THE ABOVE STANDARD WILL BE ACCEPTABLE.

3. PROVIDE ACCESS DOORS. INSTALL 1 AD FOR EACH FIRE DAMPER SECTION. 4. FIRE DAMPERS SHALL CONFIRM TO N.Y.C. MANUFACTURING B.S. AND A.

5. NUMBER 100-65 SM. SLEEVES TO BE OF SAME SHEET METAL GAGE AS DUCT CONNECTED TO IT, BUT IN NO CASE LESS THAN THAT SPECIFIED IN THE N.Y.C. BUILDING CODE RS13 PARA. 3 - 3, 7.2.3.

4 SHUTTER TYPE FIRE DAMPER & SLEEVE DETAIL
SCALE: NONE

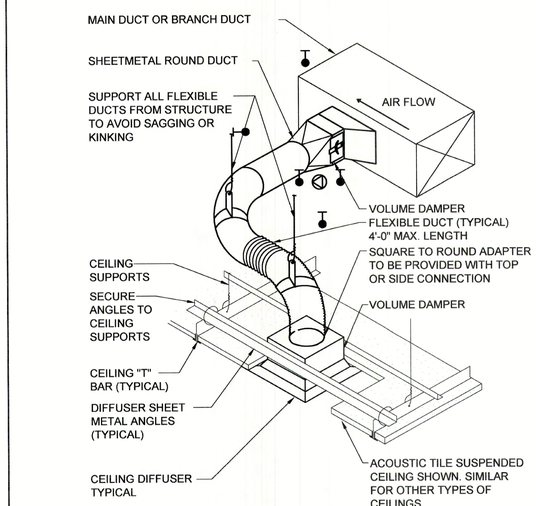

1 FLEXIBLE DUCT CONNECTION
SCALE: NONE

LIBERTY PLAZA SUITES

500 COMMERCE STREET
HAWTHORNE, NY 10532

ARCHITECT

dimovski architecture P.C.
59 Kensico Road, Thornwood, NY 10594
(914) 747-3500 | (914) 747-3588 fax
www.dimovskiarchitecture.com

STRUCTURAL ENGINEER

CHARLES A. MANGANARO
CONSULTING ENGINEERS
A PROFESSIONAL CORPORATION
303 SOUTH BROADWAY, SUITE 223, TARRYTOWN, NY 10591-5488

SHAILESH R. NAIK, P.E.
NEW YORK LICENSE No. 072797-1

MEP ENGINEER

OLA Consulting Engineers
60 Broadway,
Hawthorne, NY 10532
914.747.2800
9 West 38th Street,
Suite 601
New York, NY 10018
646.849.4110
ola-ce.com

NO.	REVISION/ISSUE	DATE
3	ISSUED FOR PERMIT	03-12-2021
2	ISSUED FOR PROGRESS 90%	03-05-2021
1.	ISSUED FOR PROGRESS	02-19-2021

SEAL

STATE OF NEW YORK · JOHN TOMME · 071678 · LICENSED PROFESSIONAL ENGINEER

PROJECT

LIBERTY PLAZA SUITES
500 COMMERCE ST.
TOWN OF MT. PLEASANT, NY

DATE:	AUGUST 12, 2020
PROJECT NO:	NDIM0001.00
DRAWN BY:	HLD
CHECKED BY:	RJ
SCALE:	AS NOTED

DRAWING TITLE

MECHANICAL DETAILS
1 OF 2

SHEET NO.

M7.1

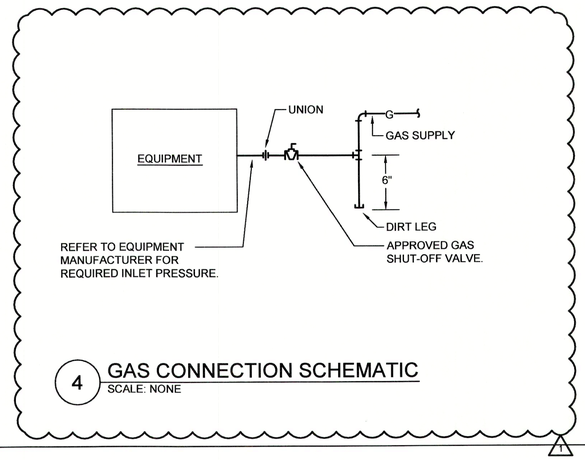

4 GAS CONNECTION SCHEMATIC
SCALE: NONE

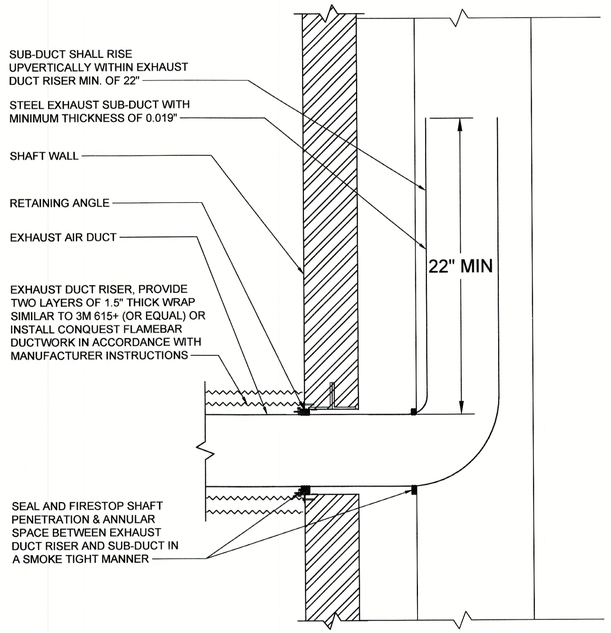

5 KITCHEN EXHAUST DUCT SHAFT PENETRATION DETAIL
SCALE: NONE

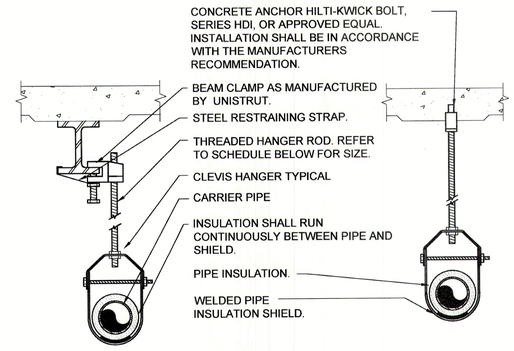

PIPE HANGER SCHEDULE					
PIPE DIA.	3/4"-2"	2 1/2"-3"	4"-5"	6"	8"-12"
HANGER DIA.	3/8"	1/2"	5/8"	3/4"	7/8"

NOTES:

1. CLEVIS HANGERS WITH WELDED INSULATION SHEILDS SIMILAR TO RAUCH FIG. 100SH ON ALL PIPES LARGER THAN 1".
2. FOR PIPES 1" OR SMALLER, A BAND HANGER WITH INSULATION SHEILD MAY BE USED SIMILAR TO RAUCH FIG. NO. 1ASH.
3. FOR NONINSULATED PIPE, INSULATION SHEILDS MAY BE OMITTED.
4. ALL PIPE HANGERS SHALL BE GALVANIZED STEEL OR FACTORY PAINTED BLACK WITH ENAMEL.
5. FOR NON FERROUS PIPING WITHOUT INSULATION, ALL HANGERS SHALL BE COPPER PLATED OR FURNISHED WITH A DI-ELECTRIC BETWEEN PIPE AND HANGERS.

2 PIPE HANGER DETAIL – GARAGE
SCALE: NONE

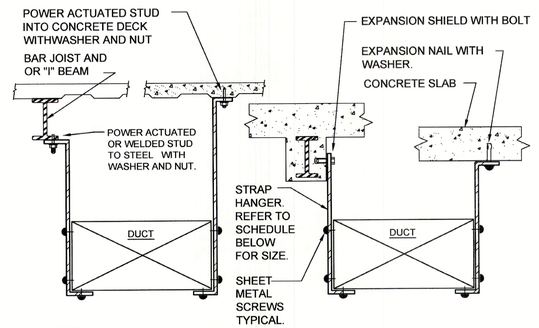

NOTES:

1. FOR DUCTS OVER 49" WIDE, THE STRAP HANGER SHALL BE TURNED UNDER THE BOTTOM OF THE DUCT.
2. ALL ANCHORS AND INSERTS SHALL HAVE NEW YORK CITY BOARD OF STANDARD AND APPEALS, (BSA) APPROVAL.

HANGER STRAP SCHEDULE		
DUCT SIZE	HANGER SIZE	MAXIMUM SPACING
UP TO 2 SQ.FT.	1" X 1/16"	8'-0"
2 SQ.FT. TO 4 SQ.FT.	1" X 1/8"	8'-0"
4 SQ.FT. TO 10 SQ.FT.	1" X 1/8"	6'-0"
OVER 10 SQ.FT.	1" X 1/8"	4'-0"

1 HANGER STRAP GARAGE DETAIL
SCALE: NONE

LIBERTY PLAZA SUITES

500 COMMERCE STREET
HAWTHORNE, NY 10532

ARCHITECT
dimovski architecture P.L.L.C.
59 Kensico Road, Thornwood, NY 10594
(914) 747-3500 | (914) 747-3588 fax
www.dimovskiarchitecture.com

STRUCTURAL ENGINEER
CHARLES A. MANGANARO CONSULTING ENGINEERS
A PROFESSIONAL CORPORATION
303 SOUTH BROADWAY, SUITE 223, TARRYTOWN, NY 10591-5488
SHAILESH R. NAIK, P.E.
NEW YORK LICENSE No. 072797-1

MEP ENGINEER
OLA Consulting Engineers
50 Broadway,
Hawthorne, NY 10532
914.747.2800
8 West 38th Street,
Suite 601
New York, NY 10018
646.845.4410
olaca.com

NO.	REVISION/ISSUE	DATE
1	DOB COMMENTS	04-26-2021
4	ISSUED FOR PRICING	03-16-2021
3	ISSUED FOR PERMIT	03-12-2021
2	ISSUED FOR PROGRESS 90%	03-05-2021
1.	ISSUED FOR PROGRESS	02-19-2021

SEAL

PROJECT
LIBERTY PLAZA SUITES
500 COMMERCE ST.
TOWN OF MT. PLEASANT, NY

DATE:	AUGUST 12, 2020
PROJECT NO:	NDIM0001.00
DRAWN BY:	HLD
CHECKED BY:	RJ
SCALE:	AS NOTED

DRAWING TITLE
MECHANICAL DETAILS
2 OF 2

SHEET NO.
M7.2

NOTES:

1.) ALL EXTERIOR LIGHT FIXTURES SHALL BE CONTROLLED VIA A TIME-CLOCK AND PHOTOCELL.

2.) PROVIDE (1) MINI-INVERTER SIMILAR TO IOTA IIS-125-I FOR LIGHT FIXTURE M. LOCATE ABOVE DROP CEILING IN MAIL ROOM.

3.) PANELBOARD BDP AND BDP2 LOCATED IN THE MAIN ELECTRICAL ROOM ON THE FIRST FLOOR.

4.) CIRCUITS FOR HWH-1 AND HP-1 ARE FED FROM RESPECTIVE APARTMENT LOAD CENTER. REFER TO DWGS. E4.1 AND E6.2.

5.) CIRCUIT ALL CFSD'S ON SECOND FLOOR TO PANELBOARD BDP2-18.

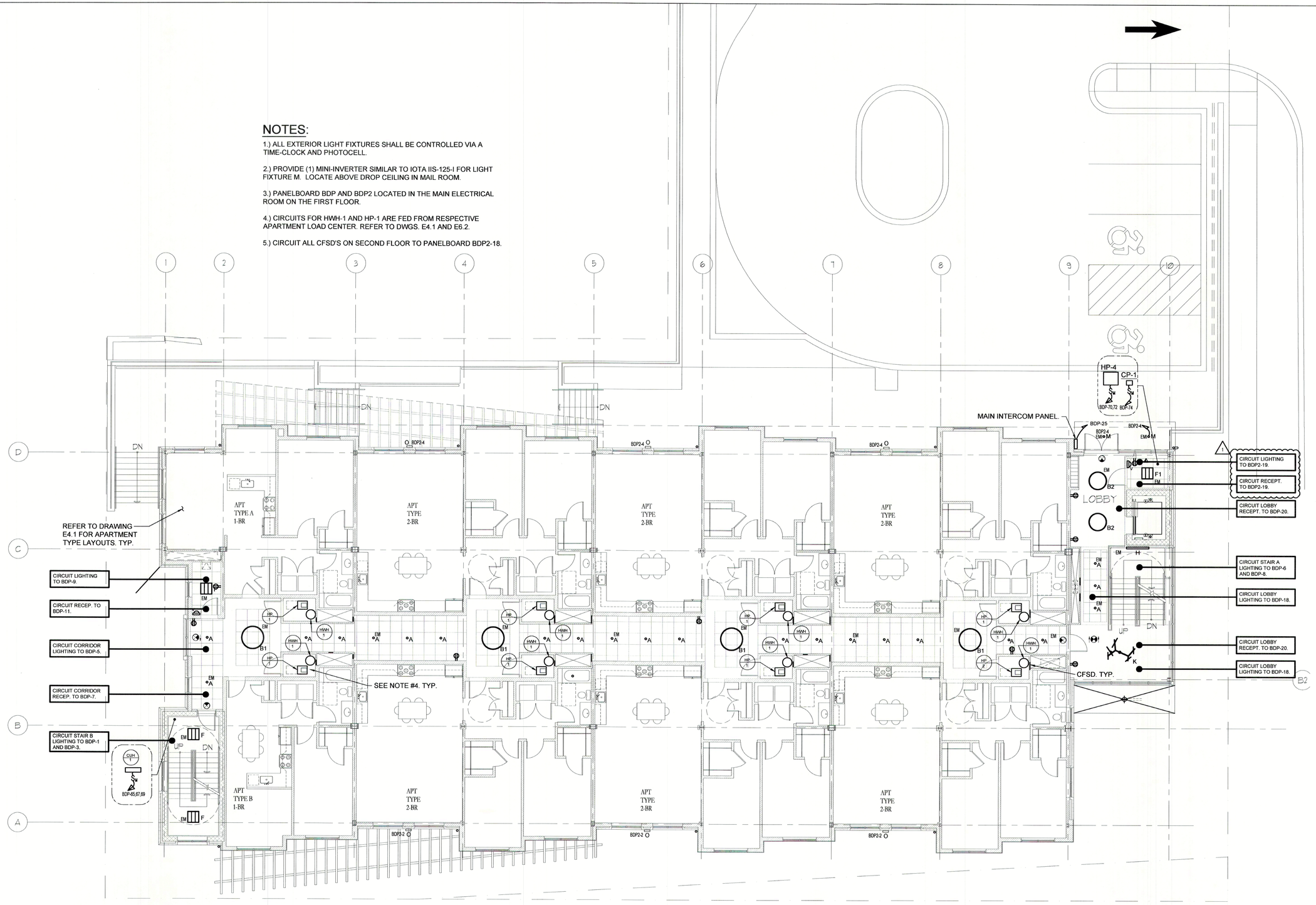

1 ELECTRICAL SECOND FLOOR LIGHTING PLAN
SCALE: 1/8" = 1'-0"

NORTH

LIBERTY PLAZA SUITES

500 COMMERCE STREET
HAWTHORNE, NY 10532

ARCHITECT

dimovski architecture P.L.L.C.
59 Kensico Road, Thornwood, NY 10594
(914) 747-3500 | (914) 747-3588 fax
www.dimovskiarchitecture.com

STRUCTURAL ENGINEER

CHARLES A. MANGANARO
CONSULTING ENGINEERS
A PROFESSIONAL CORPORATION
303 SOUTH BROADWAY, SUITE 223, TARRYTOWN, NY 10591-5488

SHAILESH R. NAIK, P.E.
NEW YORK LICENSE No. 072797-1

MEP ENGINEER

OLA Consulting Engineers
90 Broadway,
Hawthorne, NY 10532
914.747.2900

8 West 38th Street,
Suite 901
New York, NY 10018
646.848.4110

olaca.com

NO.	REVISION/ISSUE	DATE
1	DOB COMMENTS	04-26-2021
4	ISSUED FOR PRICING	03-16-2021
3	ISSUED FOR PERMIT	03-12-2021
2	ISSUED FOR PROGRESS 90%	03-05-2021
1.	ISSUED FOR PROGRESS	02-19-2021

SEAL

STATE OF NEW YORK · JOHN TOMEE · LICENSED PROFESSIONAL ENGINEER · 071678

PROJECT

LIBERTY PLAZA SUITES
500 COMMERCE ST.
TOWN OF MT. PLEASANT, NY

DATE:	AUGUST 12, 2020
PROJECT NO:	NDIM0001.00
DRAWN BY:	CT
CHECKED BY:	KS/DS
SCALE:	AS NOTED

DRAWING TITLE

ELECTRICAL SECOND FLOOR LIGHTING AND POWER PLAN

SHEET NO.

E2.2

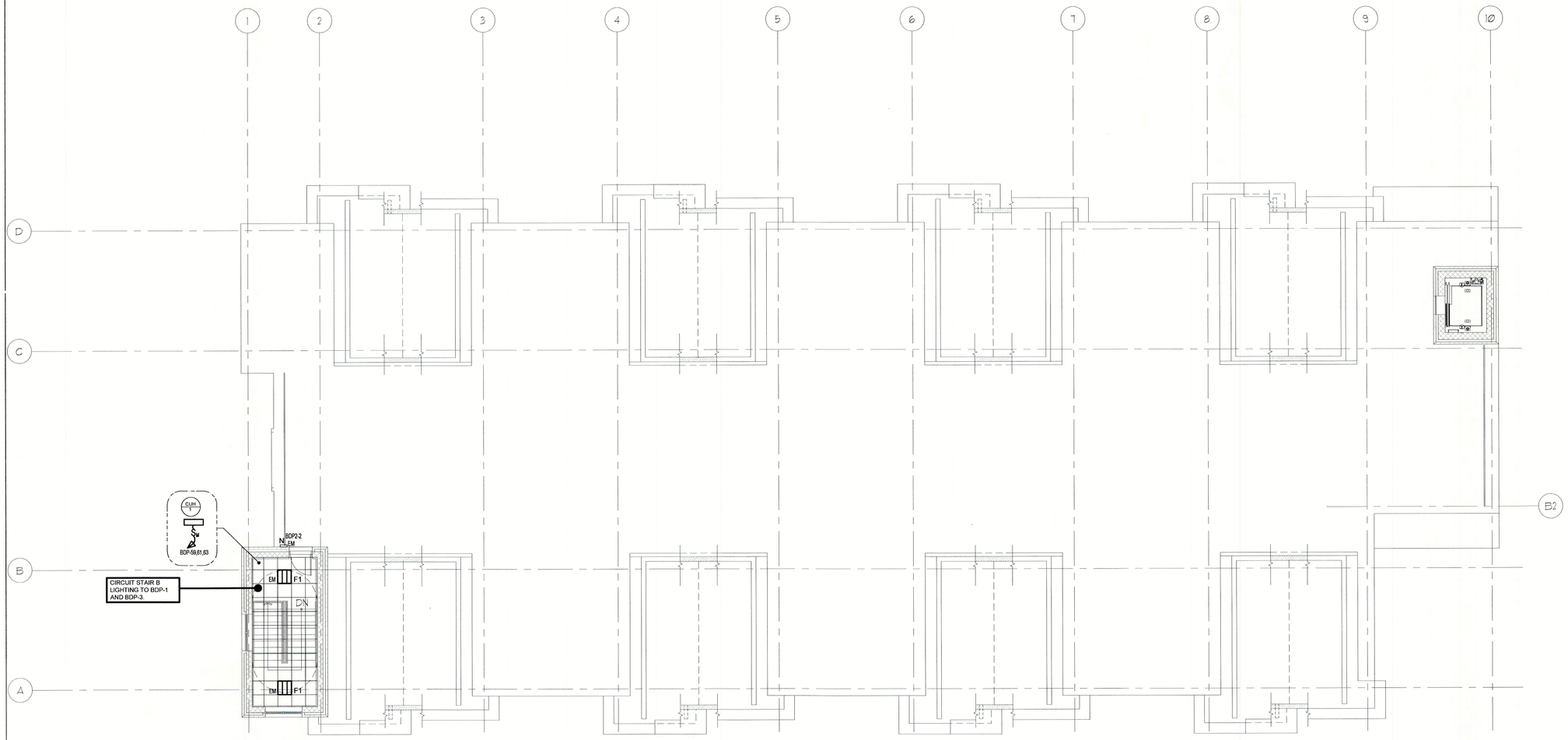

NORTH

1 ELECTRICAL FOURTH LEVEL ROOF FLOOR LIGHTING PLAN

SCALE: 1/8" = 1'-0"

NOTES:

1.) PANELBOARD BDP AND BDP2 LOCATED IN THE MAIN ELECTRICAL ROOM ON THE FIRST FLOOR.

LIBERTY PLAZA SUITES

500 COMMERCE STREET
HAWTHORNE, NY 10532

ARCHITECT

dimovski architecture p.c.
59 Kensico Road, Thornwood, NY 10594
(914) 747-3500 | (914) 747-3588 fax
www.dimovskiarchitecture.com

STRUCTURAL ENGINEER

CHARLES A. MANGANARO
CONSULTING ENGINEERS
A PROFESSIONAL CORPORATION
303 SOUTH BROADWAY, SUITE 223, TARRYTOWN, NY 10591-5488

SHAILESH R. NAIK, P.E.
NEW YORK LICENSE No. 072797-1

MEP ENGINEER

OLA Consulting Engineers
50 Broadway,
Hawthorne, NY 10532
914.747.2800

8 West 38th Street,
Suite 501
New York, NY 10018
646.843.4110

olace.com

NO.	REVISION/ISSUE	DATE
5	DOB COMMENTS	04-26-2021
4	ISSUED FOR PRICING	03-16-2021
3	ISSUED FOR PERMIT	03-12-2021
2	ISSUED FOR PROGRESS 90%	03-05-2021
1.	ISSUED FOR PROGRESS	02-19-2021

SEAL

STATE OF NEW YORK · JOHN TOMC · 071678 · LICENSED PROFESSIONAL ENGINEER

PROJECT

LIBERTY PLAZA SUITES
500 COMMERCE ST.
TOWN OF MT. PLEASANT, NY

DATE:	AUGUST 12, 2020
PROJECT NO:	NDIM0001.00
DRAWN BY:	CT
CHECKED BY:	KS/DS
SCALE:	AS NOTED

DRAWING TITLE

ELECTRICAL FOURTH LEVEL ROOF LIGHTING AND POWER PLAN

SHEET NO.

E2.4

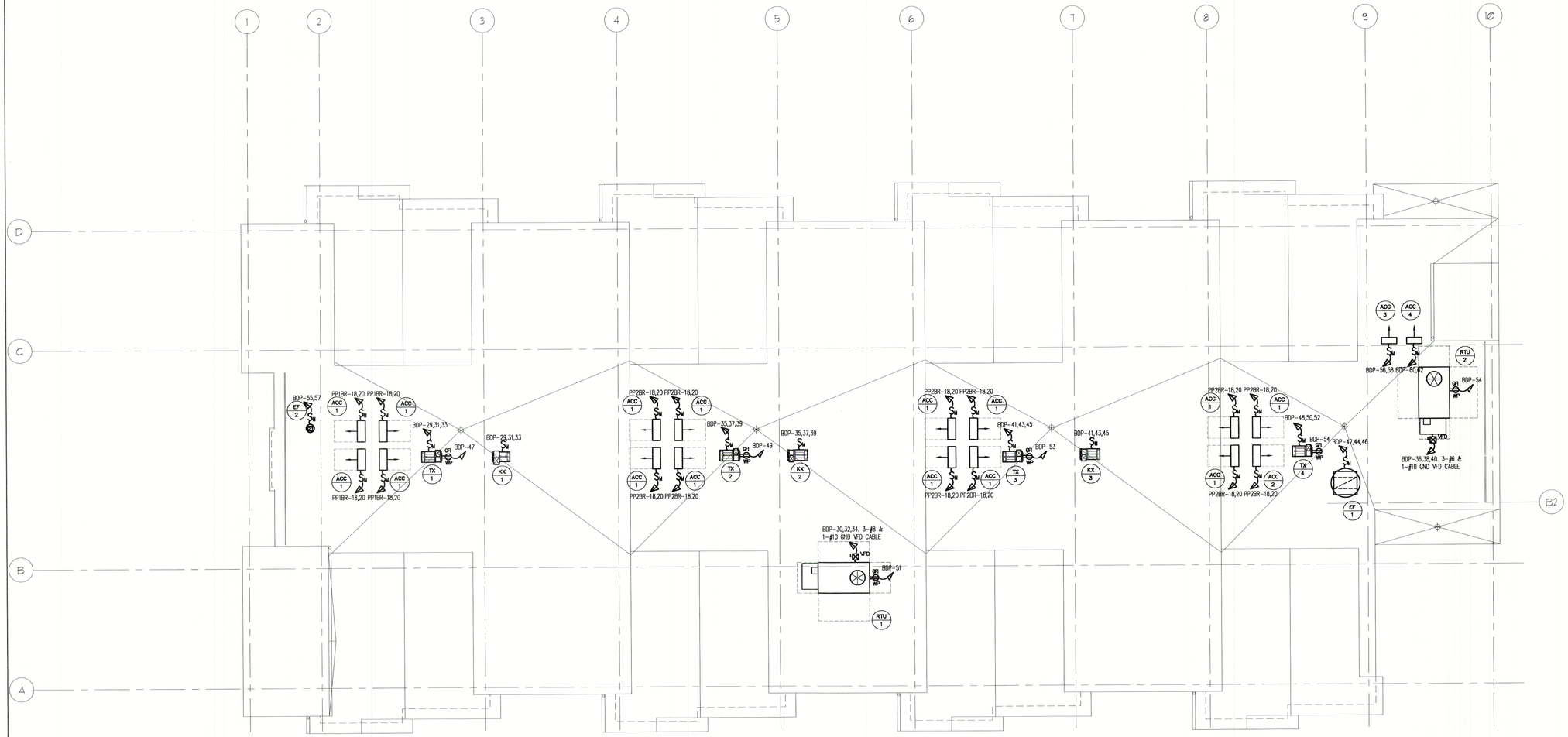

ELECTRICAL ROOF POWER PLAN

SCALE: 1/8" = 1'-0"

NORTH

NOTES:

1.) PANELBOARD BDP AND BDP2 LOCATED IN THE MAIN ELECTRICAL ROOM ON THE FIRST FLOOR.

LIBERTY PLAZA SUITES

500 COMMERCE STREET
HAWTHORNE, NY 10532

ARCHITECT

dimovski architecture p.l.l.c.
59 Kensico Road, Thornwood, NY 10594
(914) 747-3500 | (914) 747-3588 fax
www.dimovskiarchitecture.com

STRUCTURAL ENGINEER

CHARLES A. MANGANARO
CONSULTING ENGINEERS
A PROFESSIONAL CORPORATION
303 SOUTH BROADWAY, SUITE 223, TARRYTOWN, NY 10591-5488

SHAILESH R. NAIK, P.E.
NEW YORK LICENSE No. 072797-1

MEP ENGINEER

OLA Consulting Engineers
50 Broadway,
Hawthorne, NY 10532
914.747.2800

8 West 38th Street,
Suite 501
New York, NY 10018
646.849.4110

olaca.com

NO.	REVISION/ISSUE	DATE
3	ISSUED FOR PERMIT	03-12-2021
2	ISSUED FOR PROGRESS 90%	03-05-2021
1.	ISSUED FOR PROGRESS	02-19-2021

SEAL

STATE OF NEW YORK
JOHN TORRE
LICENSED PROFESSIONAL ENGINEER
071678

PROJECT

LIBERTY PLAZA SUITES
500 COMMERCE ST.
TOWN OF MT. PLEASANT, NY

DATE:	AUGUST 12, 2020
PROJECT NO:	NDIM0001.00
DRAWN BY:	CT
CHECKED BY:	KS/DS
SCALE:	AS NOTED

DRAWING TITLE

ELECTRICAL ROOF FLOOR POWER PLAN

SHEET NO.

E2.5

APARTMENT NOTES:

1.) ALL 120V, 15 AND 20 AMP CIRCUITS FEEDING LOADS IN THE KITCHENS, BEDROOMS, FAMILY ROOMS, DINING ROOMS, LIVING ROOMS, CLOSETS, APARTMENT HALLWAYS, GUEST ROOMS, GUEST SUITES AND LAUNDRY AREAS SHALL BE PROTECTED BY ARC-FAULT CIRCUIT INTERRUPTER CIRCUIT BREAKERS. RECEPTACLES IN THESE AREAS SHALL BE TAMPER RESISTANT TYPE.

2.) FOR ALL VISION/HEARING IMPAIRED APARTMENTS INTERCONNECT A 120V DUAL MODE STROBE LIGHT DEVICE THAT IS SIMILAR TO THE KIDDLE SLED 177i STROBE, WITH THE SMOKE ALARMS AND THE COMBINATION SMOKE-CARBON MONOXIDE ALARMS SO THAT THEY OPERATE TOGETHER WITHIN EACH DWELLING UNIT. TYP. PROVIDE 520HZ AUDIBLE SIGNAL IN EACH DWELLING UNIT. PROVIDE 2-#10 & 1-#10 GND IN 3/4"C FOR 120V DUAL MODE STROBE LIGHT DEVICE. LOCATE THE DUAL MODE STROBE LIGHT DEVICE IN THE BEDROOMS, LIVING ROOMS AND BATHROOMS OF THE VISION/HEARING IMPAIRED APARTMENTS.

3.) FOR ALL APARTMENTS PROVIDE FIRE ALARM MINI-HORN WITH 520HZ AUDIBLE SIGNAL IN THE BEDROOMS AND LIVING ROOMS.

4.) IN ALL VISION/HEARING IMPAIRED APARTMENTS PROVIDE FIRE ALARM HORN/STROBES WITH 177CD RATING WITH 520HZ AUDIBLE SIGNAL IN THE BEDROOMS AND LIVING ROOMS. IN ADDITION, PROVIDE FIRE ALARM STROBE ONLY DEVICE IN THE BATHROOMS OF ALL VISION/HEARING IMPAIRED APARTMENTS.

5.) PROVIDE ROCKER-SWITCH FOR ALL RANGE HOODS DESIGNATED AS "HO" IN APARTMENTS. COORDINATE WIRING WITH MANUFACTURER DIRECTION. TYP. FOR ALL APARTMENTS. COORDINATE LOCATION OF SWITCH WITH ARCHITECTURAL ELEVATIONS.

6.) FOR ALL APARTMENTS PROVIDE NEMA 6-50R RECEPTACLES AND 3-#6 & 1-#10 GND IN 3/4"C FOR ELECTRIC RANGES, DESIGNATED AS 'R'. COORDINATE FINAL NEMA RECEPTACLE WITH RANGE PURCHASED BEFORE INSTALLATION. TYP.

APARTMENT NOTES:

7.) FOR ALL APARTMENTS PROVIDE (2) 3/4"C WITH DRAGLINES FROM THE TELE. BACKBOARD LOCATED IN MECH RM. 1, 2 AND 3 ON EACH FLOOR TO EACH APARTMENT LOW VOLTAGE PANEL. TYP.

8.) FOR ALL ACCESSIBLE APARTMENTS LOAD CENTERS SHALL BE MOUNTED SUCH THAT THE HEIGHT FROM THE TOP OF THE LOAD CENTER TO THE FINISHED FLOOR IS NO MORE THAN 4' AFF.

9.) FOR ALL APARTMENTS A NEMA 5-20R SIMPLEX RECEPTACLE SHALL BE PROVIDED FOR REFRIGERATOR, MIRCOWAVE AND WASHER DESIGNATED AS 'REF.' ,'MW' AND 'W' RESPECTIVELY.

10.) FOR ALL APARTMENTS PROVIDE 3-#10 & 1-#10 GND IN 3/4"C FOR DRYERS DESIGNATED BY 'D'. PROVIDE NEMA 14-30R FOR DRYERS. COORDINATE FINAL NEMA RECEPTACLE WITH DRYER PURCHASED BEFORE INSTALLATION. TYP.

11.) FOR ALL APARTMENTS PROVIDE 3-#10 & 1-#10 GND IN 3/4"C FOR HOT WATER HEATERS DESIGNATED BY 'HWH-1'.

12.) REFER TO PANEL SCHEDULES FOR 1-BEDROOMS (PP1BR) AND 2-BEDROOM (PP2BR) RESPECTIVELY ON DWG. E6.2 FOR CIRCUITING WITHIN RESPECTIVE APARTMENT TYPES.

13.) KITCHEN COUNTER-TOP GFI RECEPTACLES SHALL BE CIRCUITED ALTERNATELY BY 2 DEDICATED CIRCUITS PER PANEL SCHEDULES. MICROWAVE, REFRIGERATOR AND ELECTRIC RANGES SHALL HAVE DEDICATED CIRCUITS PER PANEL SCHEDULES.

14.) FOR ALL APARTMENTS PROVIDE 2-#12 & 1-#12 GND IN 3/4"C FOR HEAT PUMP DESIGNATED BY 'HP-1' AND 2-#10 & 1-#10 GND IN 3/4"C FOR ASSOCIATED HEAT PUMP CONDENSER ON ROOF DESIGNATED BY 'ACC-1'.

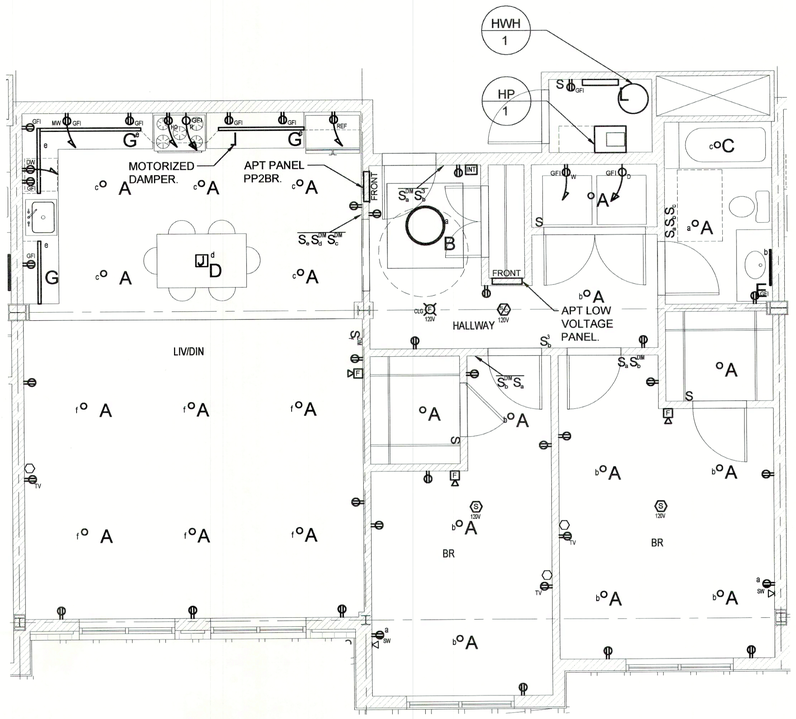

3 TYPICAL TWO BEDROOM PLAN
SCALE: 1/4" = 1'-0"
NORTH

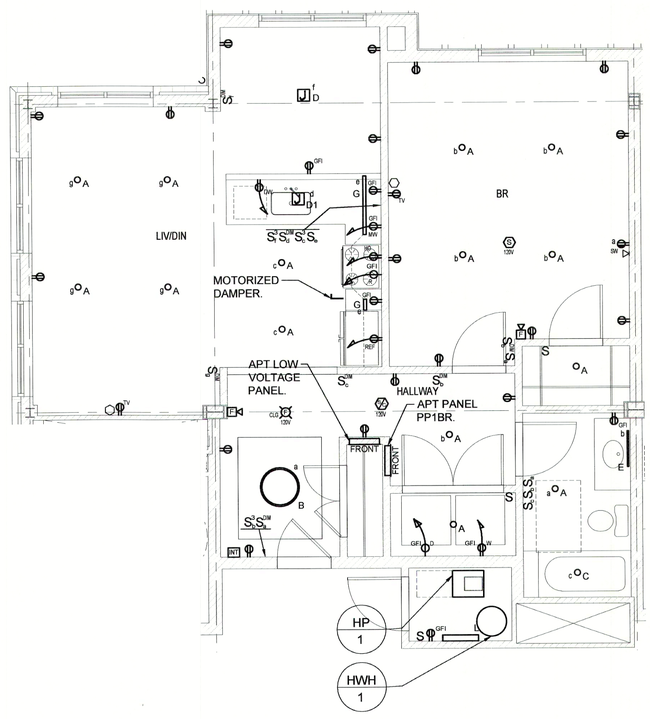

2 TYPICAL TYPE B ONE BEDROOM PLAN
SCALE: 1/4" = 1'-0"
NORTH

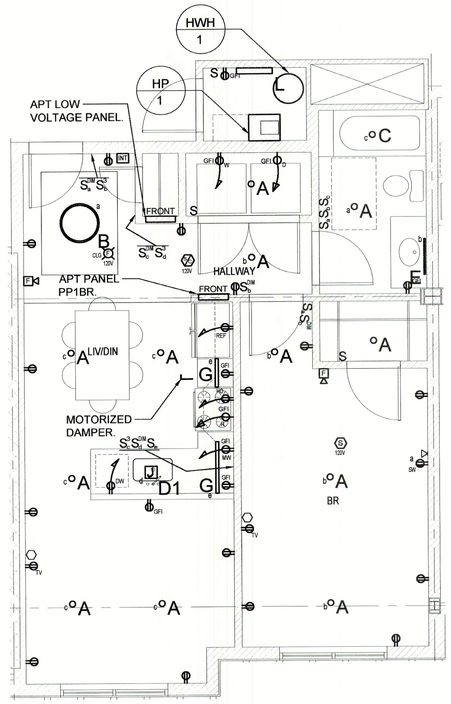

1 TYPICAL TYPE A ONE BEDROOM PLAN
SCALE: 1/4" = 1'-0"
NORTH

LIBERTY PLAZA SUITES

500 COMMERCE STREET
HAWTHORNE, NY 10532

ARCHITECT

dimovski architecture
59 Kensico Road, Thornwood, NY 10594
(914) 747-3500 | (914) 747-3588 fax
www.dimovskiarchitecture.com

STRUCTURAL ENGINEER

CHARLES A. MANGANARO
CONSULTING ENGINEERS
A PROFESSIONAL CORPORATION
303 SOUTH BROADWAY, SUITE 223, TARRYTOWN, NY 10591-5488

SHAILESH R. NAIK, P.E.
NEW YORK LICENSE No. 072797-1

MEP ENGINEER

OLA Consulting Engineers
50 Broadway,
Hawthorne, NY 10532
914.747.2800
9 West 38th Street,
Suite 501
New York, NY 10018
646.848.4110
ola-ce.com

NO.	REVISION/ISSUE	DATE
3	ISSUED FOR PERMIT	03-12-2021
2	ISSUED FOR PROGRESS 90%	03-05-2021
1.	ISSUED FOR PROGRESS	02-19-2021

SEAL

STATE OF NEW YORK · JOHN TORRE · LICENSED PROFESSIONAL ENGINEER · 071678

PROJECT

LIBERTY PLAZA SUITES
500 COMMERCE ST.
TOWN OF MT. PLEASANT, NY

DATE:	AUGUST 12, 2020
PROJECT NO:	NDIM0001.00
DRAWN BY:	CT
CHECKED BY:	KS/DS
SCALE:	AS NOTED

DRAWING TITLE

TYPICAL APARTMENT TYPE PLANS

SHEET NO.

E4.1

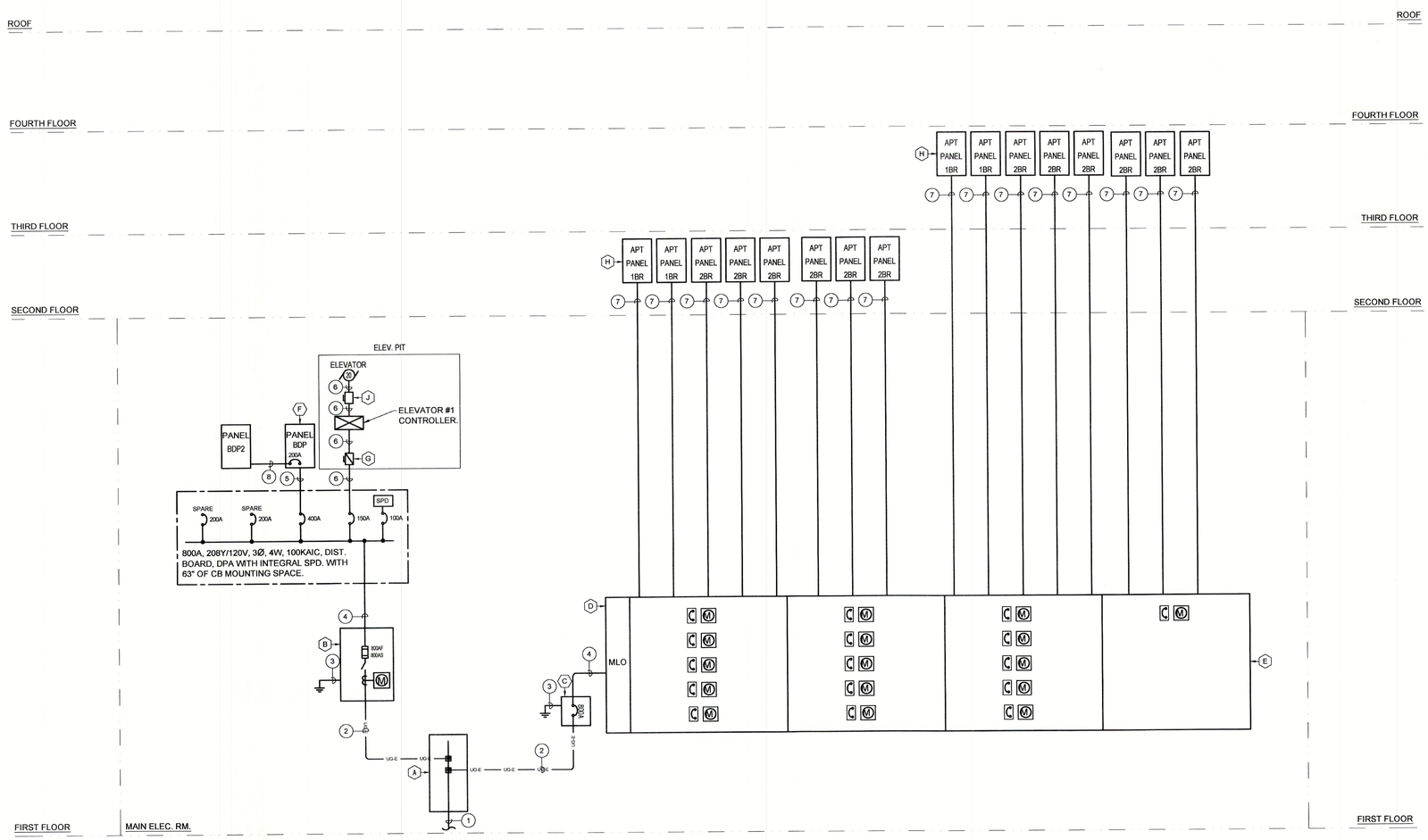

1 ELECTRICAL ONE-LINE DIAGRAM
SCALE: NONE

EQUIPMENT NOTES:

- (A) PULL BOX. SIZE AS NEEDED.
- (B) 800A, 208Y/120V, 3Ø, 4W, NEMA-1 ENCLOSURE COMBINATION TRANS "S"/SWITCH METERING/SERVICE SWITCH UNIT PER POWER UTILITY COMPANY SPECIFICATIONS. CABINET PROVIDED BY THIS CONTRACTOR AND METER PROVIDED BY POWER UTILITY COMPANY. PROVIDE WITH (3) 800A FUSES.
- (C) 800A, 240V, 3Ø, 4W, 100KAIC, NEMA-1 SERVICE RATED ENCLOSED CIRCUIT BREAKER FOR TENANT METER BANK.
- (D) 800A, 3Ø, 4W, NEMA-1 ENCLOSURE MAIN TERMINAL BOX SIMILAR TO EZM3800 TBCU PER UTILITY COMPANY SPECIFICATIONS.
- (E) (4) 125A, 3Ø, 4W, 208Y/120V IN TO 1Ø, 3W, 120/208V OUT METER SOCKET TYPE SIMILAR TO EZM315125M10 PER UTILITY COMPANY SPECIFICATIONS. PROVIDE EACH DISCONNECT SWITCH LOCATION WITH (1) 2P-125A CB. TYP. FOR (16).
- (F) 400A, 208Y/120V, 3Ø, 4W, 65KAIC BUILDING DISTRIBUTION PANEL, 'BDP'.
- (G) 100A, 240V, 3-POLE, 4W ELEVATOR DISCONNECT SWITCH WITH (3) 100A FUSES. PROVIDE WITH SHUNT TRIP CAPABILITY AND 2-NO & 2-NC AUXILIARY CONTACTS IN NEMA 1 ENCLOSURE FOR ELEVATOR MOTOR.
- (H) 125A, 120/208V, 1Ø, 3W LOAD CENTER PANELS LOCATED WITHIN EACH TENANT APARTMENT. TYPICAL FOR (16). SEE TYPICAL PANEL SCHEDULE ON DWG. E6.2 FOR MORE INFORMATION.
- (J) 100A, 240V, 3-POLE, 4W ELEVATOR UNFUSED DISCONNECT SWITCH.

WIRING/CONDUIT LEGEND:

1. (5) SETS OF 4-#500 MCM IN (5) UG 4" HDPE CONDUIT SERVICE CONDUCTORS FROM PROPERTY LINE BOX. PROVIDE (1) SPARE 4" HDPE CONDUIT WITH DRAGLINES.
2. (2) SETS OF (4-#500MCM) IN (2) UG 4"C IN ENCASED CONCRETE.
3. 1-#2/0 GROUNDING ELECTRODE. REFER TO DETAIL #11 ON DRAWING E7.1. (1)
4. (2) SETS OF (4-#500MCM & 1-#1/0 GND) IN (2) 4"C.
5. 4-#500MCM & 1-#3 GND IN 3-1/2"C.
6. 3-#2 & 1-#6 GND IN 1-1/2"C.
7. 3-#2/0 & 1-#6 GND IN 2" MC.
8. 4-#3/0 & 1-#6 GND IN 2"C.

NOTES:

1.) ALL CIRCUIT BREAKERS ARE 3 POLE, U.O.N.

2.) ALL CABLE BETWEEN THE VFD'S AND MOTORS SHALL BE TYPE TC-ER, VFD CABLE. CABLE SHALL COMPLY WITH NEMA WC70/ICEA S-95-658, UL 1277 AND NFPA 70 FOR TYPE TC-ER CABLE. VFD CABLE SHALL BE: TYPE TC-ER WITH OVERSIZED CROSSLINKED POLYETHYLENE INSULATION, SPIRAL-WRAPPED FOIL PLUS 85 PERCENT COVERAGE BRAIDED SHIELDS AND INSULATED FULL-SIZE GROUND WIRE, AND SUNLIGHT AND OIL-RESISTANT OUTER PVC JACKET.

LIBERTY PLAZA SUITES

500 COMMERCE STREET
HAWTHORNE, NY 10532

ARCHITECT

dimovski architecture P.C.
59 Kensico Road, Thornwood, NY 10594
(914) 747-3500 | (914) 747-3588 fax
www.dimovskiarchitecture.com

STRUCTURAL ENGINEER

CHARLES A. MANGANARO
CONSULTING ENGINEERS
A PROFESSIONAL CORPORATION
303 SOUTH BROADWAY, SUITE 223, TARRYTOWN, NY 10591-5488
SHAILESH R. NAIK, P.E.
NEW YORK LICENSE No. 072797-1

MEP ENGINEER

OLA Consulting Engineers
60 Broadway,
Hawthorne, NY 10532
914.747.2800
8 West 38th Street,
Suite 901
New York, NY 10018
646.848.4110
olace.com

NO.	REVISION/ISSUE	DATE
1	DOB COMMENTS	04-26-2021
4	ISSUED FOR PRICING	03-16-2021
3	ISSUED FOR PERMIT	03-12-2021
2	ISSUED FOR PROGRESS 90%	03-05-2021
1.	ISSUED FOR PROGRESS	02-19-2021

SEAL

STATE OF NEW YORK · JOHN TOME · 071678 · LICENSED PROFESSIONAL ENGINEER

PROJECT

LIBERTY PLAZA SUITES
500 COMMERCE ST.
TOWN OF MT. PLEASANT, NY

DATE:	AUGUST 12, 2020
PROJECT NO:	NDIM0001.00
DRAWN BY:	CT
CHECKED BY:	KS/DS
SCALE:	AS NOTED

DRAWING TITLE

ELECTRICAL ONE-LINE DIAGRAM

SHEET NO.

E5.1

LIGHTING SYSTEM FUNCTIONAL TESTING/COMMISSIONING

I. FUNCTIONAL TESTING

PRIOR TO PASSING FINAL INSPECTION, THE CONTRACTOR SHALL PROVIDE EVIDENCE TO THE BUILDING OWNER AND THE ENGINEER THAT THE LIGHTING CONTROL SYSTEMS HAVE BEEN TESTED TO ENSURE THAT CONTROL HARDWARE AND SOFTWARE ARE CALIBRATED, ADJUSTED, PROGRAMMED AND IN PROPER WORKING CONDITION IN ACCORDANCE WITH THE CONSTRUCTION DOCUMENTS AND MANUFACTURER'S DOCUMENTS. FUNCTIONAL TESTING, FOR THE APPLICABLE CONTROL TYPE, SHALL BE IN ACCORDANCE WITH THE FOLLOWING:

1. OCCUPANT SENSOR CONTROLS

WHERE OCCUPANT SENSOR CONTROLS ARE PROVIDED, THE FOLLOWING PROCEDURES SHALL BE PERFORMED:

A. CERTIFY THAT THE OCCUPANT SENSOR HAS BEEN LOCATED AND AIMED IN ACCORDANCE WITH MANUFACTURER RECOMMENDATIONS.
B. FOR PROJECTS WITH SEVEN OF FEWER OCCUPANT SENSORS, EACH SENSOR SHALL BE TESTED.
C. FOR PROJECTS WITH MORE THAN SEVEN OCCUPANT SENSORS, TESTING SHALL BE DONE FOR EACH UNIQUE COMBINATION OF SENSOR TYPE AND SPACE GEOMETRY. WHERE MULTIPLES OF EACH UNIQUE COMBINATION OF SENSOR TYPE AND SPACE GEOMETRY ARE PROVIDED, NOT LESS THAN 10 PERCENT, BUT IN NO CASE LESS THAN ONE, OF EACH COMBINATION SHALL BE TESTED UNLESS THE BUILDING OFFICIAL OR DESIGN PROFESSIONAL REQUIRES A HIGHER PERCENTAGE TO BE TESTED. WHERE 30 PERCENT OR MORE OF THE TESTED CONTROLS FAIL, ALL REMAINING IDENTICAL COMBINATIONS SHALL BE TESTED.

FOR OCCUPANT SENSOR CONTROLS TO BE TESTED, VERIFY THE FOLLOWING:
i. WHERE OCCUPANT SENSOR CONTROLS INCLUDE STATUS INDICATORS, VERIFY CORRECT OPERATION.
ii. THE CONTROLLED LIGHTS TURN OFF OR DOWN TO THE PERMITTED LEVEL WITHIN THE REQUIRED TIME.
iii. FOR AUTO-ON OCCUPANT SENSOR CONTROLS, THE LIGHTS TURN ON TO THE PERMITTED LEVEL WHEN AN OCCUPANT ENTERS THE SPACE.
iv. FOR MANUAL-ON OCCUPANT SENSOR CONTROLS, THE LIGHTS TURN ON ONLY WHEN MANUALLY ACTIVATED.
v. THE LIGHTS ARE NOT INCORRECTLY TURNED ON BY MOVEMENT IN ADJACENT AREAS OR BY HVAC OPERATION.

2. TIME-SWITCH CONTROLS

WHERE TIME-SWITCH CONTROLS ARE PROVIDED, THE FOLLOWING PROCEDURES SHALL BE PERFORMED:

A. CONFIRM THAT THE TIME-SWITCH CONTROL IS PROGRAMMED WITH ACCURATE WEEKDAY, WEEKEND AND HOLIDAY SCHEDULES.
B. PROVIDE DOCUMENTATION TO THE OWNER OF TIME-SWITCH CONTROLS PROGRAMMING INCLUDING WEEKDAY, WEEKEND, HOLIDAY SCHEDULES, AND SET-UP AND PREFERENCE PROGRAM SETTINGS.
C. VERIFY THE CORRECT TIME AND DATE IN THE TIME SWITCH.
D. VERIFY THAT ANY BATTERY BACK-UP IS INSTALLED AND ENERGIZED.
E. VERIFY THAT THE OVERRIDE TIME LIMIT IS SET TO NOT MORE THAN 2 HOURS.
F. SIMULATE OCCUPIED CONDITION. VERIFY AND DOCUMENT THE FOLLOWING:
i. ALL LIGHTS CAN BE TURNED ON AND OFF BY THEIR RESPECTIVE AREA CONTROL SWITCH.
ii. THE SWITCH ONLY OPERATES LIGHTING IN THE ENCLOSED SPACE IN WHICH THE SWITCH IS LOCATED.
G. SIMULATE UNOCCUPIED CONDITION. VERIFY AND DOCUMENT THE FOLLOWING:
i. NONEXEMPT LIGHTING TURNS OFF.
ii. MANUAL OVERRIDE SWITCH ALLOWS ONLY THE LIGHTS IN THE ENCLOSED SPACE WHERE THE OVERRIDE SWITCH IS LOCATED TO TURN ON OR REMAIN ON UNTIL THE NEXT SCHEDULED SHUTOFF OCCURS.

3. DAYLIGHT RESPONSIVE CONTROLS

WHERE DAYLIGHT RESPONSIVE CONTROLS ARE PROVIDED, THE FOLLOWING SHALL BE VERIFIED:

A. CONTROL DEVICES HAVE BEEN PROPERLY LOCATED, FIELD CALIBRATED AND SET FOR ACCURATE SET POINTS AND THRESHOLD LIGHT LEVELS.
B. DAYLIGHT CONTROLLED LIGHTING LOADS ADJUST TO LIGHT LEVEL SET POINTS IN RESPONSE TO AVAILABLE DAYLIGHT.
C. THE CALIBRATION ADJUSTMENT EQUIPMENT IS LOCATED FOR READILY ACCESS ONLY BY AUTHORIZED PERSONNEL.

II. DOCUMENTATION REQUIREMENTS

THE DOCUMENTS DESCRIBED IN THIS SECTION SHALL BE PROVIDED TO THE BUILDING OWNER OR OWNER'S AUTHORIZED AGENT WITHIN 60 DAYS OF THE DATE OF RECEIPT OF THE CERTIFICATE OF OCCUPANCY.

A. DRAWINGS:
i. AS-BUILT CONSTRUCTION DOCUMENTS, SHOWING THE LOCATION AND CATALOG NUMBER OF EACH PIECE OF EQUIPMENT.
B. MANUALS: AN OPERATING AND MAINTENANCE MANUAL SHALL BE PROVIDED AND INCLUDE THE FOLLOWING:
i. NAME AND ADDRESS OF NOT LESS THAN ONE SERVICE AGENCY FOR INSTALLED EQUIPMENT.
ii. A NARRATIVE OF HOW EACH SYSTEM IS INTENDED TO OPERATE, INCLUDING RECOMMENDED SET POINTS.
iii. SUBMITTAL DATA INDICATING ALL SELECTED OPTIONS FOR EACH PIECE OF LIGHTING EQUIPMENT AND LIGHTING CONTROLS.
iv. OPERATION AND MAINTENANCE MANUALS FOR EACH PIECE OF LIGHTING EQUIPMENT. REQUIRED ROUTINE MAINTENANCE ACTIONS, CLEANING AND RECOMMENDED RELAMPING SHALL BE CLEARLY IDENTIFIED.
v. A SCHEDULE FOR INSPECTING AND RECALIBRATING ALL LIGHTING CONTROLS.
C. REPORT: A REPORT OF TEST RESULTS SHALL BE PROVIDED AND INCLUDE THE FOLLOWING.
i. RESULTS OF FUNCTIONAL PERFORMANCE TESTS.
ii. DISPOSITION OF DEFICIENCIES FOUND DURING TESTING, INCLUDING DETAILS OF CORRECTIVE MEASURES USED OR PROPOSED.

LIGHTING FIXTURE SCHEDULE NOTES:

1.) VERIFY ALL FIXTURE CATALOG NUMBERS FOR INTENDED APPLICATIONS WITH REQUIRED ACCESSORIES.
2.) ALL BALLASTS AND DRIVERS IN FIXTURES LOCATED OUTDOORS SHALL BE ZERO DEGREE RATED STARTING TEMPERATURE. REFER TO DRAWINGS FOR LOCATION OF FIXTURES.
3.) LIGHT FIXTURES INDICATED AS EMERGENCY (EM) ON DRAWINGS SHALL CONTAIN AN EMERGENCY BACK-UP BATTERY WHERE POSSIBLE THE SHALL BE INTERNAL TO FIXTURE WITH A VISUAL INDICATING CHARGE LAMP AND TEST SWITCH. IF IT IS NOT POSSIBLE TO INSTALL THE EMERGENCY BATTERY IN THE FIXTURE, THE CONTRACTOR SHALL FURNISH & INSTALL A REMOTE EMERGENCY BATTERY. EACH BATTERY PACK SHALL BE CONNECTED SO THAT THE FIXTURE CAN BE SWITCHED UNDER NORMAL CONDITIONS AND IN THE EVENT OF A POWER OUTAGE, THE FIXTURE SHALL AUTOMATICALLY ILLUMINATE FOR 90 MINUTES WITH A 1200 LUMEN OUTPUT (TOTAL FROM FIXTURE), MINIMUM.
4.) ALL EXIT AND EMERGENCY FIXTURES SHALL BE FED FROM UNSWITCHED LEG OF ASSOCIATED LOCAL LIGHTING CIRCUITS.
5.) IN THE EVENT THE CONTRACTOR CHOOSES TO SUBSTITUTE LIGHT FIXTURES FOR THOSE THAT ARE SPECIFIED ON THE LIGHT FIXTURE SCHEDULE, THE CONTRACTOR SHALL SUBMIT POINT-TO-POINT PHOTOMETRIC CALCULATIONS FOR ALL AREAS WHERE THE SUBSTITUTED FIXTURES ARE INDICATED TO BE INSTALLED ON THE DRAWINGS. THESE CALCULATIONS SHALL BE SUBMITTED ALONG WITH THE LIGHT FIXTURE SHOP DRAWINGS.

LIGHTING FIXTURE SCHEDULE

FIXTURE DESIGNATION	MANUFACTURER	CATALOG NUMBER	LAMPS	LUMENS	VOLTS	MOUNTING	REMARKS
A EM OPTION	FOCAL POINT LIGHTING	FLC3D-RO-SW-700L UNV-LZ1-IC-EMR-RO -700L-35K-FL1-CD	(1) 8W LED	700	120V	RECESSED	3.5" DIA. RECESSED LED DOWNLIGHT. PROVIDE EM OPTION FOR 90 MINUTES OF BATTERY BACKUP TIME, WHERE INDICATED ON PLANS BY 'EM'. COORDINATE FINISH COLOR WITH ARCHITECT.
B EM OPTION	FOCAL POINT LIGHTING	FSDEP-2-FL-2000DN -35K-1C-UNV-LD1-SM -EM-WH	(1) 17.3W LED	2000	120V	SURFACE	24" DIA. SURFACE MOUNTED LED SKYDOME EDGE LIGHT FIXTURE. PROVIDE EM OPTION FOR 90 MINUTES OF BATTERY BACKUP TIME, WHERE INDICATED ON PLANS BY EM. COORDINATE FINISH COLOR WITH ARCHITECT.
B1 EM OPTION	FOCAL POINT LIGHTING	FSDEP-4-FL-7000DN-OUP -35K-1C-UNV-L11-C24 -EM-WH	(1) 62.2W LED	7000	120V	PENDANT	48" DIA. PENDANT MOUNTED LED SKYDOME EDGE LIGHT FIXTURE. PROVIDE EM OPTION FOR 90 MINUTES OF BATTERY BACKUP TIME, WHERE INDICATED ON PLANS BY EM. COORDINATE FINISH COLOR WITH ARCHITECT.
B2 EM OPTION	FOCAL POINT LIGHTING	FSDEP-3-FL-4000DN-0UP -35K-1C-UNV-L11-C24 -EM-WH	(1) 34.6W LED	4000	120V	PENDANT	36" DIA. PENDANT MOUNTED LED SKYDOME EDGE LIGHT FIXTURE. PROVIDE EM OPTION FOR 90 MINUTES OF BATTERY BACKUP TIME, WHERE INDICATED ON PLANS BY EM. COORDINATE FINISH COLOR WITH ARCHITECT.
C	FOCAL POINT LIGHTING	FLC3D-RT-SW-700L 120-IC-OD-LC3-RT 700L-35K-DNS-FL1-CD	(1) 8W LED	700	120V	RECESSED	3.5" DIA. RECESSED LED DOWNLIGHT RATED FOR WET LOCATIONS.
D	-	TBD	-	-	120V	PENDANT	SPECIALITY LED PENDANT LIGHT FIXTURE
D1	-	TBD	-	-	120V	PENDANT	SPECIALITY LED PENDANT LIGHT FIXTURE
E	MODERN FORMS LIGHTING	WS-3724-AL-B1D2113	(1) 13.3W LED	1220	120V	SURFACE	24" LINEAR NEO LED BATH & INTERIOR SCONCE WITH BRUSHED ALUMINUM FINISH AND DAMP LOCATION LISTED..
F EM OPTION	FOCAL POINT LIGHTING	FEQ2-22-AC-2000-35K -1C-UNV-L11-F-EM-WH	(1) 18.16W LED	2000	120V	SURFACE	2'X2' LED EQUATION 2 SURFACE LIGHT FIXTURE. PROVIDE EM OPTION FOR 90 MINUTES OF BATTERY BACKUP TIME, WHERE INDICATED ON PLANS BY EM. COORDINATE FINISH COLOR WITH ARCHITECT.
F1 EM OPTION	FOCAL POINT LIGHTING	FEQ2-22-AC-2000L-30K -1C-UNV-ST-EM-WH	(1)18.16W LED	2000	120V	RECESSED	2'X2' LED EQUATION 2 RECESSED LIGHT FIXTURE. PROVIDE EM OPTION FOR 90 MINUTES OF BATTERY BACKUP TIME, WHERE INDICATED ON PLANS BY EM. COORDINATE FINISH COLOR WITH ARCHITECT.
G	Q TRAN LIGHTING	SW24/3.0-DMP-30-WH-CL2-MATCH	3W/FT LED	300L/FT	120V	SURFACE	LINEAR LED UNDER CABINET STRIP LIGHT FIXTURE IN STATIC WHITE.
H EM OPTION	FOCAL POINT LIGHTING	FSM4BW-FLFL-275DN -275UP-35K-1C-UNV-LD1 -WM-EM-WH-4FT'	(1) 21.06W LED	550	120V	SURFACE	SEEM 4 LED DIRECT/INDIRECT WALL MOUNTED LIGHT FIXTURE.
J	LITHONIA LIGHTING	VCPG-V4-P4-30K-80CRI-T5M-120-PM -NLTAIR2PIR924	(1) 26.6W LED	-	120V	PENDANT	LED PENDANT LIGHT FIXTURE. PROVIDE EM OPTION FOR 90 MINUTES OF BATTERY BACKUP TIME, WHERE INDICATED ON PLANS BY EM. COORDINATE FINISH COLOR WITH ARCHITECT.
K	ROLL & HILL LIGHTING	CHANDELIER 20 LIGHTS	(20) 3W LED	2000	120V	PENDANT	CHANDELIER WITH (20) LED LAMPS MACHINED ALUMINUM & GLASS FINISH AND 5" ROUND CANOPY.
L	LITHONIA LIGHTING	ZLIN-L48-SMR-3000LM -FST-120-35-80-E7W-WH	(1) 25W LED	3000	120V	SURFACE /PENDANT	4' LED LINEAR STRIP SURFACE/PENDANT MOUNTED LED LIGHT FIXTURE. PROVIDE EM OPTION FOR 90 MINUTES OF BATTERY BACKUP TIME, WHERE INDICATED ON PLANS BY 'EM'.
M	TAGETTI	CCD-F-10-FL-L1-30-84-1	(1) 29W LED	2209	120V	RECESED	6" PROFESSIONAL FIXED LED DOWNLIGHT. PROVIDE REMOTE EM BATTERY OPTION FOR 90 MINUTES OF BATTERY BACKUP TIME, WHERE INDICATED ON PLANS BY 'EM'.
N	LSI INDUSTRIES INC.	XWS-LED-3L-FTW-UNV -30-80CRI-CWBB	(1) 26W LED	3624	120V	SURFACE	MIRANDA SMALL WALL SCOUNCE (XWS). OUTDOOR LED WALL LIGHT.
O	TAGETTI	MRS-W-41-BI-L2-30	(1) 13W LED	1186	120V	SURFACE	MR. SMITH WALL MOUNT LUMINAIRE.
P	TAGETTI	ZES-RP-FW-L1-30-24	(1)4.6W LED	40	120V	STEP	PROFESSIONAL SMALL SCALE LED STEPLIGHT.
⊠	PHILIPS LIGHTING	PVERWEM	2W LED		120V	SURFACE	EXIT SIGN WITH 90 MINUTES OF BATTERY BACKUP TIME, MIN., RED LETTERING ON WHITE BACKGROUND, WHITE THERMO PLASTIC HOUSING, SEALED LEAD CADMIUM BATTERY. PROVIDE CHEVRONS AS INDICATED ON DRAWINGS.
⊠ WP	LITHONIA LIGHTING	EDG-1-G	2.2W LED		120V	SURFACE	WEATHERPROOF EXIT SIGN WITH 90 MINUTES OF BATTERY BACKUP TIME, MIN., RED LETTERING ON WHITE BACKGROUND, WHITE THERMO PLASTIC HOUSING, SEALED LEAD CADMIUM BATTERY. PROVIDE CHEVRONS AS INDICATED ON DRAWINGS BY 'EM'.
S1	INULA LIGHTING	IBL-X-1Q-30-XX-UNV	(1) 7.6W LED	-	120V	BOLLARD	BOLLARD LED LIGHT FIXTURE
S2	INULA LIGHTING	IBL-X-2Q90-30-XX-UNV	(1) 14W LED	-	120V	BOLLARD	BOLLARD LED LIGHT FIXTURE
S3	INULA LIGHTING	ICL-X-1Q-XX-XX-30 -XX-UNV	(1) 15.2W LED	-	120V	BOLLARD	BOLLARD LED LIGHT FIXTURE
S4	INULA LIGHTING	ICL-X-2Q90-XX-XX-30 -XX-UNV	(1) 28.5W LED	-	120V	BOLLARD	BOLLARD LED LIGHT FIXTURE
S5	INULA LIGHTING	ICL-X-3Q-XX-XX-30 -XX-UNV	(1) 42W LED	-	120V	BOLLARD	BOLLARD LED LIGHT FIXTURE
S6	OURAY LIGHTING	U5-R2-S1-5G350-30 -UNV-HS	(1) 44W LED	-	120V	POLE	POLE MOUNTED LED LIGHT FIXTURE
S7	OURAY LIGHTING	U5-R3-S1-5G350-30 -UNV-HS	(1) 44W LED	-	120V	POLE	POLE MOUNTED LED LIGHT FIXTURE
S8	OURAY LIGHTING	U5-R4-S1-5G350-30 -UNV-HS	(1) 44W LED	-	120V	POLE	POLE MOUNTED LED LIGHT FIXTURE

LIBERTY PLAZA SUITES

500 COMMERCE STREET
HAWTHORNE, NY 10532

ARCHITECT
dimovskiarchitecture P.L.L.C.
59 Kensico Road, Thornwood, NY 10594
(914) 747-3500 | (914) 747-3588 fax
www.dimovskiarchitecture.com

STRUCTURAL ENGINEER
CHARLES A. MANGANARO CONSULTING ENGINEERS
A PROFESSIONAL CORPORATION
303 SOUTH BROADWAY, SUITE 223, TARRYTOWN, NY 10591-5488
SHAILESH R. NAIK, P.E.
NEW YORK LICENSE No. 072797-1

MEP ENGINEER
OLA Consulting Engineers
60 Broadway,
Hawthorne, NY 10532
914.747.2800
8 West 38th Street,
Suite 901
New York, NY 10018
646.849.4110
ola-ce.com

NO.	REVISION/ISSUE	DATE
3	ISSUED FOR PERMIT	03-12-2021
2	ISSUED FOR PROGRESS 90%	03-05-2021
1.	ISSUED FOR PROGRESS	02-19-2021

SEAL
STATE OF NEW YORK · JOHN TORRE · LICENSED PROFESSIONAL ENGINEER · 071678

PROJECT
LIBERTY PLAZA SUITES
500 COMMERCE ST.
TOWN OF MT. PLEASANT, NY

DATE:	AUGUST 12, 2020
PROJECT NO:	NDIM0001.00
DRAWN BY:	CT
CHECKED BY:	KS/DS
SCALE:	AS NOTED

DRAWING TITLE
ELECTRICAL SCHEDULES

SHEET NO.
E6.1

APT PANEL PP1BR

MAIN RATING: 125A | MAIN C.B.: MLO | KAIC RATING: 10KAIC
VOLTAGE: 120/208V | PHASE: 1 | WIRE: 3 | MOUNTING: RECESSED

CIRC. NO.	LOAD DESCRIPTION	BKR. AMPS	NO. OF POLES	NO. OF POLES	BKR. AMPS	LOAD DESCRIPTION	CIRC. NO.
1	REFRIGERATOR RECEP.	AF20	1	1	AF20	APT LOW VOLTAGE PANEL RECEP.	2
3	COUNTERTOP RECEP.	AF20	1	1	AF20	BEDROOM RECEP.	4
5	COUNTERTOP RECEP.	AF20	1	1	AF20	SPARE	6
7	MICROWAVE RECEP.	AF20	1	1	AF20	LIV./DIN./HALLWAY ROOM RECEP.	8
9	RANGE	GF50	2	1	AF20	LIGHTING	10
11				2	15	HP-1	12
13	RANGE HOOD AND MOTORIZED DAMPER	AF20	1				14
15	DISHWASHER	GA20	1	1	AF20	COMB. SMOKE/CO ALARMS	16
17	WASHING MACHINE	GA20	1	2	25	ACC-1	18
19	DRYER	AF30	2				20
21				2	30	HOT WATER HEATER, HWH-1.	22
23	BATHROOM RECEP. & LTG.	AF20	1				24
25	SPARE	AF20	1	1	AF20	MECH RM. LTS AND GFI REC.	2
27	-	-	1	1	-	-	4
29	-	-	1	1	-	-	6

LK - PROVIDE LOCKING TABS ON C.B.; GF - GFI TYPE C.B.; AF - ARC FAULT TYPE C.B.; ST - SHUNT TRIP C.B; GA - COMBINATION GFI/ARC FAULT TYPE CB.

APT PANEL PP2BR

MAIN RATING: 125A | MAIN C.B.: MLO | KAIC RATING: 10KAIC
VOLTAGE: 120/208V | PHASE: 1 | WIRE: 3 | MOUNTING: RECESSED

CIRC. NO.	LOAD DESCRIPTION	BKR. AMPS	NO. OF POLES	NO. OF POLES	BKR. AMPS	LOAD DESCRIPTION	CIRC. NO.
1	REFRIGERATOR RECEP.	AF20	1	1	AF20	APT LOW VOLTAGE PANEL RECEP.	2
3	COUNTERTOP RECEP.	AF20	1	1	AF20	BEDROOM RECEP.	4
5	COUNTERTOP RECEP.	AF20	1	1	AF20	BEDROOM RECEP.	6
7	MICROWAVE RECEP.	AF20	1	1	AF20	LIV./DIN./HALLWAY ROOM RECEP.	8
9	RANGE	GF50	2	1	AF20	LIGHTING	10
11				2	15	HP-1	12
13	RANGE HOOD AND MOTORIZED DAMPER	AF20	1				14
15	DISHWASHER	GA20	1	1	AF20	COMB. SMOKE/CO ALARMS	16
17	WASHING MACHINE	GA20	1	2	25	ACC-1	18
19	DRYER	AF30	2				20
21				2	30	HOT WATER HEATER, HWH-1	22
23	BATHROOM RECEP. & LTG.	AF20	1				24
25	SPARE	AF20	1	1	AF20	MECH RM. LTS AND GFI REC.	2
27	-	-	1	1	-	-	4
29	-	-	1	1	-	-	6

LK - PROVIDE LOCKING TABS ON C.B.; GF - GFI TYPE C.B.; AF - ARC FAULT TYPE C.B.; ST - SHUNT TRIP C.B; GA - COMBINATION GFI/ARC FAULT TYPE CB.

PANELBOARD BDP2 SCHEDULE

MAIN RATING: 200A | MAIN C.B.: MLO | KAIC RATING: 42KAIC
VOLTAGE: 208Y/120V | PHASE: 3 | WIRE: 4 | MOUNTING: SURFACE

CIRC. NO.	LOAD DESCRIPTION	BKR. AMPS	NO. OF POLES	NO. OF POLES	BKR. AMPS	LOAD DESCRIPTION	CIRC. NO.
1	SITE LIGHTING	20	1	1	20	EXTERIOR BLDG. MOUNTED LIGHTING	2
3	SITE LIGHTING	20	1	1	20	EXTERIOR BLDG. MOUNTED LIGHTING	4
5	SITE LIGHTING	20	1	1	20	EXTERIOR STEP LIGHTING	6
7	ELEV. PIT LIGHT & GFI REC.	20	1	1	20	MOTORIZED DAMPERS- 3RD FLOOR.	8
9	ELEV. CAB. LIGHT.	20	1				10
11	ELEV. SUMP PUMP CONTROLLER	20	1	3	15	HEAT TRACE CONTOLLER.	12
13	SECURITY/TELCO. EQPT.	20	1				14
15	SECURITY/TELCO. EQPT.	20	1	1	20	DRY VALVE COMPRESSOR	16
17	REC. - MAIN ELEC RM	20	1	1	20	CFSD	18
19	1ST FL. MAIL RM. REC AND LIGHT	20	1	1	20	CFSD	20
21	SPARE	20	1	1	20	SPARE	22
23	SPARE	20	1	1	20	SPARE	24
25	SPARE	20	1	1	20	SPARE	26
27	SPARE	20	1	1	20	SPARE	28
29	SPARE	20	1	1	20	SPARE	30
31	SPARE	20	1	1	20	SPARE	32
33	SPARE	20	1	1	20	SPARE	34
35	SPARE	20	1	1	20	SPARE	36
37	SPARE	20	1	1	20	SPARE	38
39	SPARE	20	1	1	20	SPARE	40
41	SPARE	20	1	1	20	SPARE	42

LK - PROVIDE LOCKING TABS ON C.B.; GF - GFI TYPE C.B.; GP - GFP TYPE C.B.; AF - ARC FAULT TYPE C.B.; ST - SHUNT TRIP C.B.

NOTES:

PANELBOARD BDP SCHEDULE

MAIN RATING: 400A | MAIN C.B.: MLO | KAIC RATING: 42KAIC
VOLTAGE: 208Y/20V | PHASE: 3 | WIRE: 4 | MOUNTING: SURFACE

CIRC. NO.	LOAD DESCRIPTION	BKR. AMPS	NO. OF POLES	NO. OF POLES	BKR. AMPS	LOAD DESCRIPTION	CIRC. NO.
1	STAIR B LIGHTING.	20	1	1	20	GARAGE LIGHTING.	2
3	STAIR B LIGHTING.	20	1	1	20	GARAGE LIGHTING.	4
5	2ND FL. CORR. LIGHTING.	20	1	1	20	STAIR A LIGHTING.	6
7	2ND FL. CORR. RECEPT.	20	1	1	20	STAIR A LIGHTING.	8
9	2ND AND 3RD FL. GARBAGE RM LIGHTING.	20	1	1	20	1ST FL. LOBBY LIGHTING.	10
11	2ND AND 3RD FL. GARBAGE RM RECEPT.	20	1	1	20	1ST FL. LOBBY RECEPT.	12
13	3RD FL. CORR. LIGHTING.	20	1	1	20	WATER SERVICE RM. LIGHTING	14
15	3RD FL. CORR. RECEPT.	20	1	1	20	WATER SERVICE RM. RECEPT.	16
17	FIRE ALARM CONTROL PANEL.	20	1	1	20	2ND FL. LOBBY LIGHTING.	18
19				1	20	2ND FL. LOBBY RECEPT.	20
21	GARAGE DOOR MOTOR.	20	3	1	20	3RD FL. LOBBY LIGHTING.	22
23				1	20	3RD FL. LOBBY RECEPT.	24
25	MAIN INTERCOM PANEL.	20	1	1	20	3RD FL. GYM LIGHTING.	26
27	MAIN INTERCOM PANEL.	20	1	1	20	3RD FL. GYM RECEPT.	28
29							30
31	TX-1 AND KX-1	15	3	3	45	RTU-1	32
33							34
35							36
37	TX-2 AND KX-2	15	3	3	50	RTU-2	38
39							40
41							42
43	TX-3 AND KX-3	15	3	3	30	EF-1	44
45							46
47	EXTERIOR GFI/WP REC.	20	1				48
49	EXTERIOR GFI/WP REC.	20	1	3	15	TX-4	50
51	EXTERIOR GFI/WP REC.	20	1				52
53	EXTERIOR GFI/WP REC.	20	1	1	20	EXTERIOR GFI/WP REC.	54
55	EF-2	15	2	2	15	ACC-3	56
57							58
59							60
61	CUH-1- 4TH LEVEL ROOF PLAN (1)	20	3	2	15	ACC-4	62
63							64
65				2	15	HP-3 - GYM	66
67	CUH-1- 1ST FL (1)	20	3	1	20	CP-1 - GYM	68
69				2	15	HP-4 - MAIL RM	70
71	UH-1 - GARAGE	20	2				72
73				1	20	CP-1 - MAIL RM.	74
75	UH-1 - GARAGE	20	2	2	20	UH-2 -WATER METER RM.	76
77							78
79	SPARE	20	1				80
81	SPARE	20	1	3	200	BDP-2	82
83	SPARE	20	1				84

LK - PROVIDE LOCKING TABS ON C.B.; GF - GFI TYPE C.B.; GP - GFP TYPE C.B.; AF - ARC FAULT TYPE C.B.; ST - SHUNT TRIP C.B.

NOTES:

LIBERTY PLAZA SUITES

500 COMMERCE STREET
HAWTHORNE, NY 10532

ARCHITECT
dimovski architecture PLLC
59 Kensico Road, Thornwood, NY 10594
(914) 747-3500 | (914) 747-3588 fax
www.dimovskiarchitecture.com

STRUCTURAL ENGINEER
CHARLES A. MANGANARO CONSULTING ENGINEERS
A PROFESSIONAL CORPORATION
303 SOUTH BROADWAY, SUITE 223, TARRYTOWN, NY 10591-5488
SHAILESH R. NAIK, P.E.
NEW YORK LICENSE No. 072797-1

MEP ENGINEER
OLA Consulting Engineers
50 Broadway,
Hawthorne, NY 10532
914.747.2900
8 West 38th Street,
Suite 901
New York, NY 10018
646.848.4110
ola-ce.com

NO.	REVISION/ISSUE	DATE
1	DOB COMMENTS	04-26-2021
4	ISSUED FOR PRICING	03-16-2021
3	ISSUED FOR PERMIT	03-12-2021
2	ISSUED FOR PROGRESS 90%	03-05-2021
1.	ISSUED FOR PROGRESS	02-19-2021

SEAL
STATE OF NEW YORK * JOHN TOMEE * 071678 * LICENSED PROFESSIONAL ENGINEER

PROJECT
LIBERTY PLAZA SUITES
500 COMMERCE ST.
TOWN OF MT. PLEASANT, NY

DATE:	AUGUST 12, 2020
PROJECT NO:	NDIM0001.00
DRAWN BY:	CT
CHECKED BY:	KS/DS
SCALE:	AS NOTED

DRAWING TITLE
ELECTRICAL SCHEDULES

SHEET NO.
E6.2 (1)

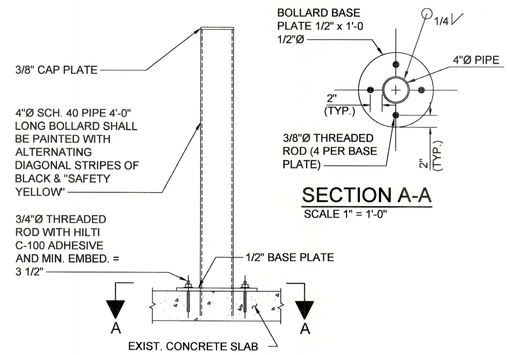

SECTION A-A
SCALE 1" = 1'-0"

12 TYPICAL BOLLARD ON CONCRETE SLAB DETAIL
SCALE: NONE

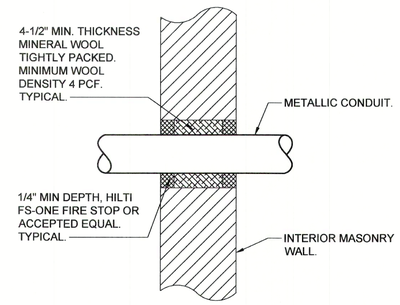

9 TYPICAL INTERIOR MASONRY WALL CONDUIT PENETRATION DETAIL
SCALE: NONE

NOTE:

1. ELECTRICAL CONTRACTOR RESPONSIBLE TO PROVIDE ALL LINE AND LOW VOLTAGE CONTROL WIRING FOR GARAGE DOOR OPENERS (GDO'S). GDO'S AND DEVICES TO BE SUPPLIED AND INSTALLED BY THE GENERAL CONTRACTOR.

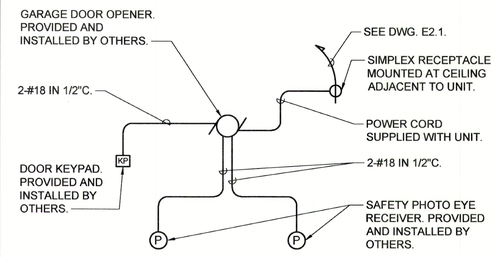

2 TYPICAL GARAGE DOOR OPENER WIRING DIAGRAM
SCALE: NONE

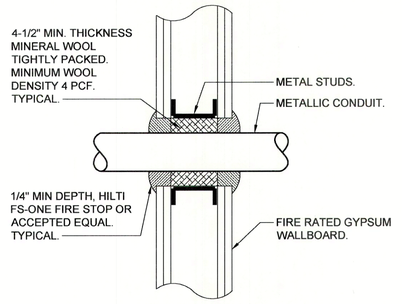

3 TYPICAL FIRE RATED GYPSUM WALL CONDUIT PENETRATION DETAIL
SCALE: NONE

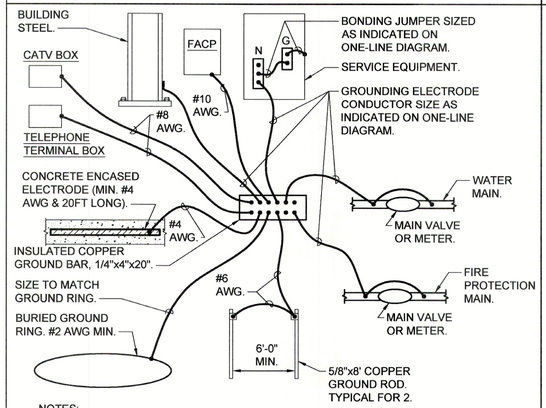

NOTES:

1. CONNECTION TO WATER MAIN AND FIRE PROTECTION MAIN SHALL BE A MAXIMUM OF 5'-0" FROM WHERE THE PIPE ENTERS THE BUILDING AND BE PRIOR TO ANY METER, VALVE JOINT, ETC.
2. ALL CONNECTIONS TO THE GROUND BAR SHALL BE MADE USING COMPRESSION LUGS SIZED TO ACCOMODATE THE CONDUCTORS.

11 SERVICE GROUNDING DETAIL
SCALE: NONE

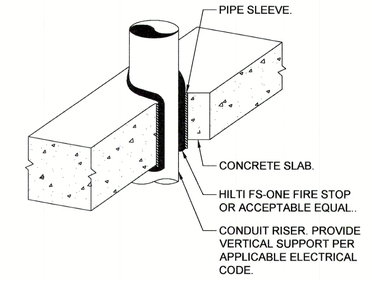

8 TYPICAL VERTICAL CONDUIT PENETRATION DETAIL
SCALE: NONE

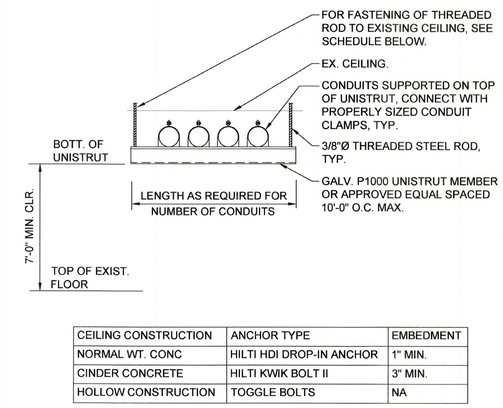

CEILING CONSTRUCTION	ANCHOR TYPE	EMBEDMENT
NORMAL WT. CONC	HILTI HDI DROP-IN ANCHOR	1" MIN.
CINDER CONCRETE	HILTI KWIK BOLT II	3" MIN.
HOLLOW CONSTRUCTION	TOGGLE BOLTS	NA

5 TRAPESE SUPPORT DETAIL
SCALE: NONE

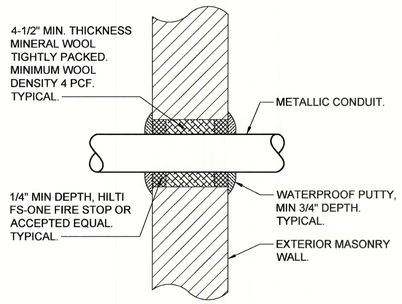

2 TYPICAL EXTERIOR MASONRY WALL ABOVE GRADE CONDUIT PENETRATION DETAIL
SCALE: NONE

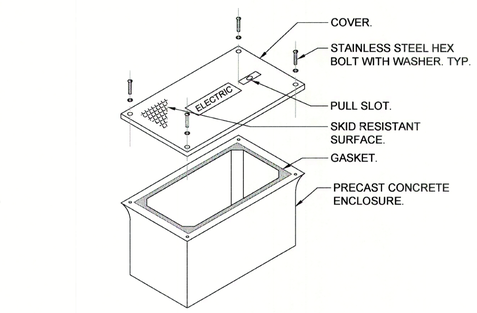

NOTES:
1.) HAND HOLE SHALL BE TIER 15, 17"L x 30"W x 30"H WITH OPEN BOTTOM AND RATED FOR VEHICULAR TRAFFIC AS MANUFACTURED BY QUAZITE, CATALOG NUMBER B14173030A WITH #C12173002A*** COVER OR EQUAL. BOX SHALL BE INSTALLED IN ACCORDANCE WITH MANUFACTURER'S INSTRUCTIONS.

2.) PROVIDE 6" OF GRAVEL BELOW BOX.

3.) COVER SHALL BE IMPRINTED WITH THE APPROPRIATE DESCRIPTION OF BOX CONTENTS (I.E. ELECTRIC, TELEPHONE, DATA, CABLE TV, ETC.).

10 HAND HOLE DETAIL
SCALE: NONE

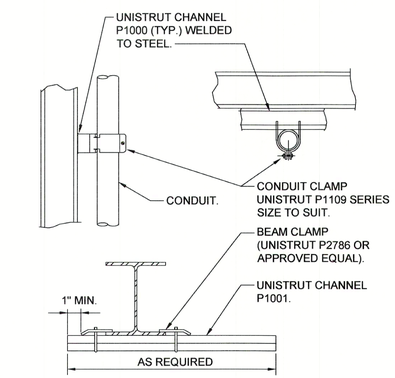

7 CONDUIT SUPPORTED FROM STRUCTURAL STEEL DETAIL
SCALE: NONE

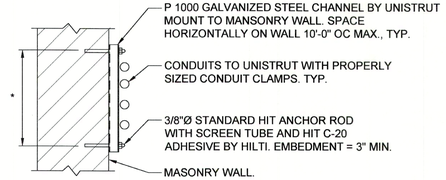

* LENGTH AS REQUIRED FOR NUMBER OF CONDUITS

4 TYPICAL CONDUIT SUPPORT ON MASONRY DETAIL
SCALE: NONE

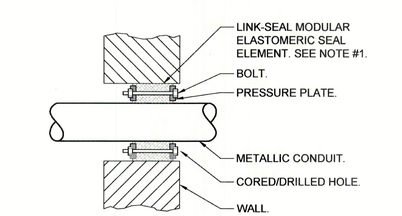

NOTES:

1. SEAL ASSEMBLY BASED ON MODEL "C" LINK-SEAL MODULAR SEAL, WITH EPDM SEAL ELEMENT, REINFORCED NYLON POLYMER PRESSURE PLATES, STEEL WITH 2-PART ZINC DICHROMATE & CORROSION INHIBITING COATING NUTS AND BOLTS AND WITH A OPERATING TEMPERATURE RANGE OF -40°F TO +250°F.
2. PROVIDE AND INSTALL TWO SEALS WHEN PENETRATED WALL THICKNESS IS GREATER THAN 12".
3. PROVIDE SCHEDULE 80 WALL SLEEVE FOR NEW WALL CONSTRUCTION PER MANUFACTURER'S REQUIREMENTS.

1 TYPICAL EXTERIOR MASONRY WALL BELOW GRADE CONDUIT PENETRATION DETAIL
SCALE: NONE

LIBERTY PLAZA SUITES

500 COMMERCE STREET
HAWTHORNE, NY 10532

ARCHITECT
dimovski architecture P.C.
59 Kensico Road, Thornwood, NY 10594
(914) 747-3500 | (914) 747-3588 fax
www.dimovskiarchitecture.com

STRUCTURAL ENGINEER
CHARLES A. MANGANARO CONSULTING ENGINEERS
A PROFESSIONAL CORPORATION
303 SOUTH BROADWAY, SUITE 223, TARRYTOWN, NY 10591-5488
SHAILESH R. NAIK, P.E.
NEW YORK LICENSE No. 072797-1

MEP ENGINEER
OLA Consulting Engineers
60 Broadway,
Hawthorne, NY 10532
914.747.2800
6 West 38th Street,
Suite 901
New York, NY 10018
646.648.4110
olace.com

NO.	REVISION/ISSUE	DATE
3	ISSUED FOR PERMIT	03-12-2021
2	ISSUED FOR PROGRESS 90%	03-05-2021
1.	ISSUED FOR PROGRESS	02-19-2021

SEAL

PROJECT
LIBERTY PLAZA SUITES
500 COMMERCE ST.
TOWN OF MT. PLEASANT, NY

DATE:	AUGUST 12, 2020
PROJECT NO:	NDIM0001.00
DRAWN BY:	CT
CHECKED BY:	KS/DS
SCALE:	AS NOTED

DRAWING TITLE
ELECTRICAL DETAILS

SHEET NO.
E7.1

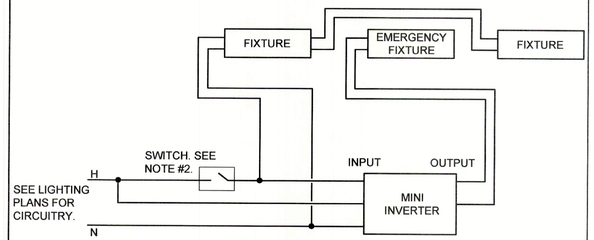

EMERGENCY FIXTURE MINI INVERTER SYSTEM WIRING DIAGRAM

2 SCALE: NONE

NOTES:
1. MINI INVERTER SHALL HAVE 90 MINUTES OF BATTERY BACKUP TIME WITH 91% LUMEN OUTPUT FROM FIXTURES MINIMUM. UNIT INPUT/OUTPUT VOLTAGE SHALL BE 120/277V FIELD SELECTABLE. MINI INVERTER TO BE MANUFACTURED BY IOTA, IIS SERIES OR APPROVED EQUAL.
2. "SWITCH" REPRESENTS A SINGLE POLE SWITCH, A SET OF CONTACTS, A COMBINATION OF 3 WAY AND 4 WAY SWITCHES, ETC. SEE DRAWINGS FOR ACTUAL SWITCH CONFIGURATION.
3. SEE LIGHTING PLANS FOR ACTUAL NUMBER OF LIGHT FIXTURES ON CIRCUIT.

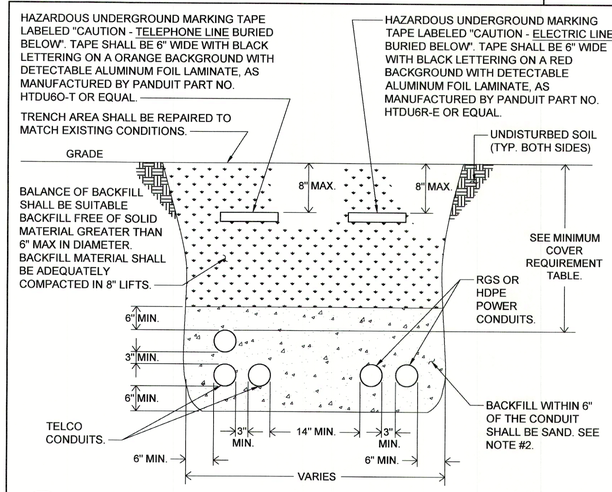

TRENCHING DETAIL FOR CONDUIT

1 SCALE: NONE

MINIMUM COVER REQUIREMENT TABLE	
LOCATION	NONMETALLIC RACEWAYS LISTED FOR DIRECT BURIAL WITHOUT CONCRETE ENCASEMENT OR OTHER APPROVED RACEWAYS
ALL LOCATION NOT SPECIFIED BELOW.	18"
IN TRENCH BELOW 2-IN. THICK CONCRETE OR EQUIVALENT.	12"
UNDER MINIMUM OF 4-IN. THICK CONCRETE EXTERIOR SLAB WITH NO VEHICULAR TRAFFIC AND THE SLAB EXTENDING NOT LESS THAN 6 IN. BEYOND THE UNDERGROUND INSTALLATION.	4" SEE NOTE #2.
UNDER STREETS, HIGHWAYS, ROADS, ALLEYS, DRIVEWAYS, AND PARKING LOTS.	24"

NOTES:
1. DETAIL SHOWN FOR INFORMATION PURPOSES. SAME CONCEPT SHALL ALSO APPLY FOR SINGLE CONDUITS.
2. SAND MAY BE OMITTED FOR INSTALLATIONS WHERE COVER REQUIREMENTS ARE 6" OR LESS.

LIBERTY PLAZA SUITES

500 COMMERCE STREET
HAWTHORNE, NY 10532

ARCHITECT

dimovski architecture p.c.
59 Kensico Road, Thornwood, NY 10594
(914) 747-3500 | (914) 747-3588 fax
www.dimovskiarchitecture.com

STRUCTURAL ENGINEER

CHARLES A. MANGANARO
CONSULTING ENGINEERS
A PROFESSIONAL CORPORATION
303 SOUTH BROADWAY, SUITE 223, TARRYTOWN, NY 10591-5488

SHAILESH R. NAIK, P.E.
NEW YORK LICENSE No. 072797-1

MEP ENGINEER

OLA Consulting Engineers
50 Broadway,
Hawthorne, NY 10532
914.747.2800
8 West 38th Street,
Suite 501
New York, NY 10018
646.649.4110
olace.com

NO.	REVISION/ISSUE	DATE
3	ISSUED FOR PERMIT	03-12-2021
2	ISSUED FOR PROGRESS 90%	03-05-2021
1.	ISSUED FOR PROGRESS	02-19-2021

SEAL

PROJECT

LIBERTY PLAZA SUITES
500 COMMERCE ST.
TOWN OF MT. PLEASANT, NY

DATE:	AUGUST 12, 2020
PROJECT NO:	NDIM0001.00
DRAWN BY:	CT
CHECKED BY:	KS/DS
SCALE:	AS NOTED

DRAWING TITLE

ELECTRICAL DETAILS

SHEET NO.

E7.2

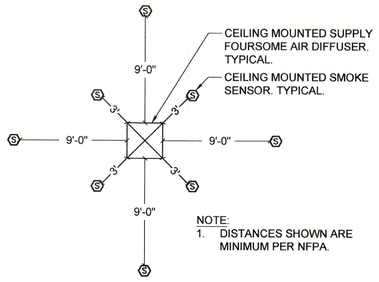

1 CEILING MOUNTED SMOKE DETECTOR LOCATION WITH RESPECT TO AIR DIFFUSER
SCALE: NONE

SYMBOLS AND ABBREVIATIONS

SYMBOL	ABBREVIATION	DESCRIPTION
F	-	FIRE ALARM MANUAL PULL STATION
F	-	FIRE ALARM COMBINATION AUDIO/VISUAL DEVICE (15/75 CD - STROBE)
F 110	-	FIRE ALARM COMBINATION AUDIO/VISUAL DEVICE (110 CD - STROBE)
F	-	FIRE ALARM STROBE 15/75 CD
F 110	-	FIRE ALARM STROBE 110 CD
CO	-	CARBON MONOXIDE DEVICE (15/75 CD - STROBE)
S EL; SH; SC	-	SMOKE DETECTOR. EL - ELEVATOR LOBBY; SH - SMOKE HATCH; SC - PLENUM RATED ABOVE CEILING
CO SB	SB	FIRE ALARM DEVICE. SB - SOUNDER BASE FOR SMOKE OR CARBON MONOXIDE DETECTOR
S AC-	-	DUCT MOUNTED SMOKE DETECTOR
H	-	HEAT DETECTOR
F	-	FIRE ALARM MINI-HORN
TS	-	FIRE ALARM TAMPER SWITCH
WF	-	FIRE ALARM WATER FLOW SWITCH
LT	-	FIRE WATER TANK LOW TEMP SENSOR
LW	-	FIRE WATER TANK LOW WATER
HW	-	FIRE WATER TANK HIGH WATER
LA	-	DRY VALVE LOW AIR
HA	-	DRY VALVE HIGH AIR
ANN	-	FIRE ALARM ANNUNCIATOR PANEL
CM	CM	FIRE ALARM CONTROL MODULE
MM	MM	FIRE ALARM MONITORING MODULE
FACP	FACP	FIRE ALARM CONTROL PANEL
BPS	BPS	BOOSTER POWER SUPPLY
R	-	FIRE ALARM RELAY
	EOL	END OF LINE RESISTOR

LIBERTY PLAZA SUITES

500 COMMERCE STREET
HAWTHORNE, NY 10532

ARCHITECT
dimovski architecture
59 Kensico Road, Thornwood, NY 10594
(914) 747-3500 | (914) 747-3588 fax
www.dimovskiarchitecture.com

STRUCTURAL ENGINEER
CHARLES A. MANGANARO
CONSULTING ENGINEERS
A PROFESSIONAL CORPORATION
303 SOUTH BROADWAY, SUITE 223, TARRYTOWN, NY 10591-5488
SHAILESH R. NAIK, P.E.
NEW YORK LICENSE No. 072797-1

MEP ENGINEER
OLA Consulting Engineers
50 Broadway,
Hawthorne, NY 10532
914.747.2800
8 West 38th Street,
Suite 901
New York, NY 10018
646.848.4110
ola-ce.com

NO.	REVISION/ISSUE	DATE
3	ISSUED FOR PERMIT	03-12-2021
2	ISSUED FOR PROGRESS 90%	03-05-2021
1.	ISSUED FOR PROGRESS	02-19-2021
NO.	REVISION/ISSUE	DATE

SEAL
STATE OF NEW YORK · JOHN TORRE · 071678 · LICENSED PROFESSIONAL ENGINEER

PROJECT
LIBERTY PLAZA SUITES
500 COMMERCE ST.
TOWN OF MT. PLEASANT, NY

DATE:	AUGUST 12, 2020
PROJECT NO:	NDIM0001.00
DRAWN BY:	CT
CHECKED BY:	KS/DS
SCALE:	AS NOTED

DRAWING TITLE
FIRE ALARM ABBREVIATIONS AND DETAILS

SHEET NO.
FA0.1

RISER NOTES:

1. THIS IS NOT A POINT-TO-POINT WIRING DIAGRAM. PRIOR TO STARTING ANY WORK, A WORKING POINT-TO-POINT WIRING DIAGRAM SHALL BE OBTAINED FROM FIRE ALARM SYSTEM VENDOR AND PERFORM ALL WORK IN ACCORDANCE WITH THAT DIAGRAM.
2. ELECTRICAL CONTRACTOR SHALL INCLUDE IN THE BASE BID ALL 120V CIRCUITS THAT ARE REQUIRED TO SUPPORT THE OPERATION OF THE FIRE ALARM SYSTEM. COORDINATE REQUIREMENTS WITH THE FIRE ALARM VENDOR.
3. QUANTITY OF STROBE BOOSTER POWER SUPPLY PANELS AND ASSOCIATED 120V CIRCUITS SHALL BE COORDINATED WITH SELECTED FIRE ALARM SYSTEM MANUFACTURER AND/OR FIRE ALARM VENDOR.
4. PROVIDE ALL NECESSARY WIRING, MODULES, COMPONENTS, EXTENDER CABINET, AND PROGRAMMING REQUIRED TO CONNECT NEW DEVICES TO EXISTING SYSTEM.
5. PROVIDE ALL NECESSARY HARDWARE AND PROGRAMMING TO PROVIDE THE CLIENT WITH 20% SPARE CAPACITY ON ALL INITIATING AND INDICATING CIRCUITS.
6. PROVIDE AS PART OF THE BASE CONTRACT ALL LABOR AND MATERIALS TO INSTALL FIFTEEN (15) ADDITIONAL FIRE ALARM DEVICES DURING CONSTRUCTION. THE ADDITIONAL FIRE ALARM DEVICES CAN BE BUT NOT LIMITED TO SMOKE DETECTOR, HEAT DETECTOR, DOOR HOLDER, DUCT DETECTOR, FAN SHUTDOWN, TAMPER SWITCHES, FLOW SWITCHES, ETC. INCLUDE ALL LABOR AND MATERIALS INCLUDING WIRE, BOXES, CONDUIT, TERMINATIONS, HARDWARE, SOFTWARE, PROGRAMMING AND TESTING.
7. HEAT DETECTORS IN ELEVATOR MACHINE ROOM AND/OR SHAFT SHALL HAVE A LOWER TEMPERATURE RATING THAN THE NEARBY SPRINKLER HEAD(S). HEAT DETECTORS SHALL BE INSTALLED 2'-0" MAXIMUM AWAY FROM EACH SPRINKLER HEAD IN THE ELEVATOR MACHINE ROOM AND EACH HEAD LOCATED GREATER THAN 2'-0" ABOVE THE FLOOR OF THE ELEVATOR SHAFT. UPON ACTIVATION OF A HEAT DETECTOR USED FOR ELEVATOR POWER SHUTDOWN, THERE SHALL BE A DELAY IN THE ACTIVATION OF THE POWER SHUNT TRIP. THIS DELAY SHALL BE THE TIME THAT IT TAKES THE ELEVATOR CAB TO TRAVEL FROM THE TOP OF THE HOISTWAY TO THE LOWEST RECALL LEVEL. COORDINATE WITH ELEVATOR CONTRACTOR.
8. DUCT SMOKE DETECTORS SHALL BE FURNISHED AND WIRED BY ELECTRICAL CONTRACTOR AND INSTALLED IN DUCT WORK BY MECHANICAL CONTRACTOR.
9. CARBON MONOXIDE DETECTORS SHALL BE SUPERVISED BY FIRE ALARM SYSTEM AND SHALL NOT SEND AN ALARM SIGNAL TO THE SYSTEM. THESE DETECTORS SHALL BE MOUNTED ON SOUNDER BASES WHICH PROVIDE LOCAL ALARM ONLY IN A TEMPORAL 4 PATTERN OR CONSTANT TONE.
10. ALL VISUAL ALARM DEVICES SHALL BE ADA COMPLIANT.
11. ELECTRICAL CONTRACTOR TO PROVIDE A RELAY FOR EACH SMOKE DAMPER/COMBINATION FIRE SMOKE DAMPER. RELAYS ARE NOT SHOWN ON PLANS FOR CLARITY.
12. DOOR HOLDERS SHALL BE FURNISHED AND WIRED BY THE ELECTRICAL CONTRACTOR AND INSTALLED BY THE GENERAL CONTRACTOR.
13. PROVIDE REMOTE LED INDICATORS FOR ALL CONCEALED FIRE ALARM DEVICES SUCH AS DUCT SMOKE DETECTORS, ABOVE CEILING SMOKE DETECTORS, ELEVATOR SHAFT DETECTORS, MONITORING AND CONTROL MODULES, ETC. LED INDICATORS FOR DEVICES MOUNTED ABOVE DROP CEILINGS SHALL BE MOUNTED BELOW ASSOCIATED DEVICES. LABEL INDICATORS TO INDICATE DEVICE SERVED.
14. CONTRACTOR TO PROVIDE SMOKE DETECTOR(S) IN ALL LOCATIONS CONTAINING FIRE ALARM CONTROL PANELS, DATA GATHERING PANELS, BOOSTER POWER SUPPLIES, OR ANY OTHER FIRE ALARM SYSTEM PANEL, WHETHER SHOWN ON PLANS OR NOT.
15. CONTROL MODULES USED TO INITIATE EMERGENCY CONTROL FUNCTIONS THAT DO NOT FAIL IN A SAFE POSITION SHALL BE LOCATED WITHIN 3 FEET OF THE COMPONENT CONTROLLING THE EMERGENCY CONTROL FUNCTION PER NFPA 72. THIS INCLUDES, BUT IS NOT LIMITED TO, CONTROL MODULES CONNECTED TO FAN MOTOR CONTROLLERS, ELEVATOR CONTROLLERS, ETC.
16. BATTERY BACKUP FOR FACP SHALL PROVIDE A MINIMUM OF 24 HOURS OF STAND BY POWER FOLLOWED BY 45 MINUTES OF ALARM.
17. ALL FIRE ALARM PANELS, JUNCTION BOX COVERS, ETC SHALL BE PAINTED "FIRE DEPARTMENT RED".
18. NOTIFICATION CIRCUITS FOR APARTMENT MINI-HORN DEVICES SHALL BE SIZED SUCH THAT AUDIO DEVICES CAN BE REPLACED WITH VISUAL/AUDIO DEVICES TO COMPLY WITH THE REQUIREMENT THAT GROUP R-2 DWELLING UNITS OR SLEEPING UNITS SHALL BE PROVIDED WITH THE CAPABILITY TO SUPPORT VISIBLE ALARM NOTIFICATION APPLIANCES.

1

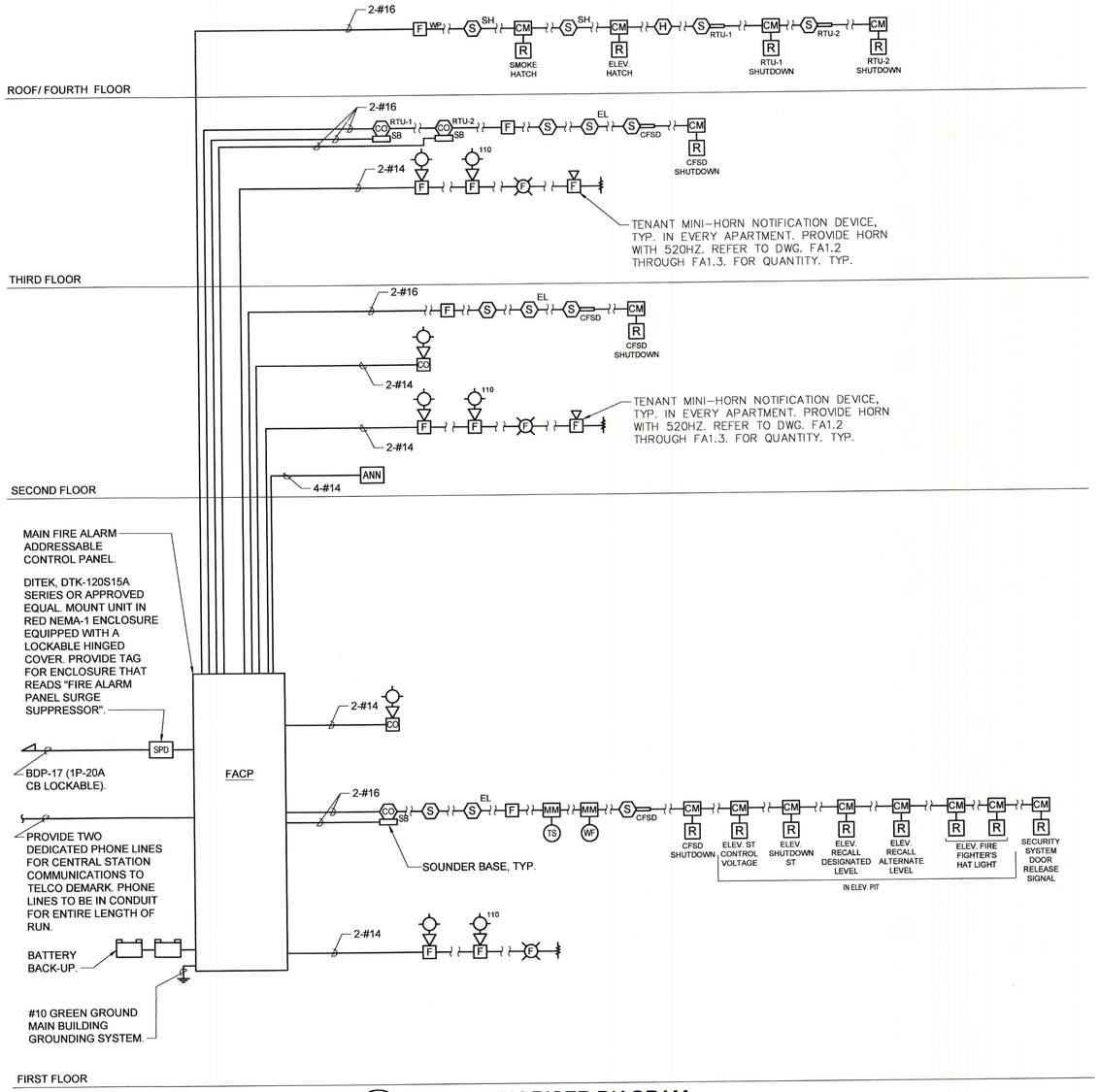

1 FIRE ALARM RISER DIAGRAM
SCALE: NONE

LIBERTY PLAZA SUITES

500 COMMERCE STREET
HAWTHORNE, NY 10532

ARCHITECT

dimovski architecture P.C.
59 Kensico Road, Thornwood, NY 10594
(914) 747-3500 | (914) 747-3588 fax
www.dimovskiarchitecture.com

STRUCTURAL ENGINEER

CHARLES A. MANGANARO
CONSULTING ENGINEERS
A PROFESSIONAL CORPORATION
303 SOUTH BROADWAY, SUITE 223, TARRYTOWN, NY 10591-5488

SHAILESH R. NAIK, P.E.
NEW YORK LICENSE No. 072797-1

MEP ENGINEER

OLA Consulting Engineers
90 Broadway,
Hawthorne, NY 10532
914.747.2800
&
6 West 38th Street,
Suite 501
New York, NY 10018
646.848.4110
ola-ce.com

NO.	REVISION/ISSUE	DATE
1	DOB COMMENTS	04-26-2021
4	ISSUED FOR PRICING	03-16-2021
3	ISSUED FOR PERMIT	03-12-2021
2	ISSUED FOR PROGRESS 90%	03-05-2021
1.	ISSUED FOR PROGRESS	02-19-2021

SEAL

STATE OF NEW YORK · JOHN TOMEI · 071678 · LICENSED PROFESSIONAL ENGINEER

PROJECT

LIBERTY PLAZA SUITES
500 COMMERCE ST.
TOWN OF MT. PLEASANT, NY

DATE:	AUGUST 12, 2020
PROJECT NO:	NDIM0001.00
DRAWN BY:	CT
CHECKED BY:	KS/DS
SCALE:	AS NOTED

DRAWING TITLE

FIRE ALARM RISER DIAGRAM

SHEET NO.

FA1.0

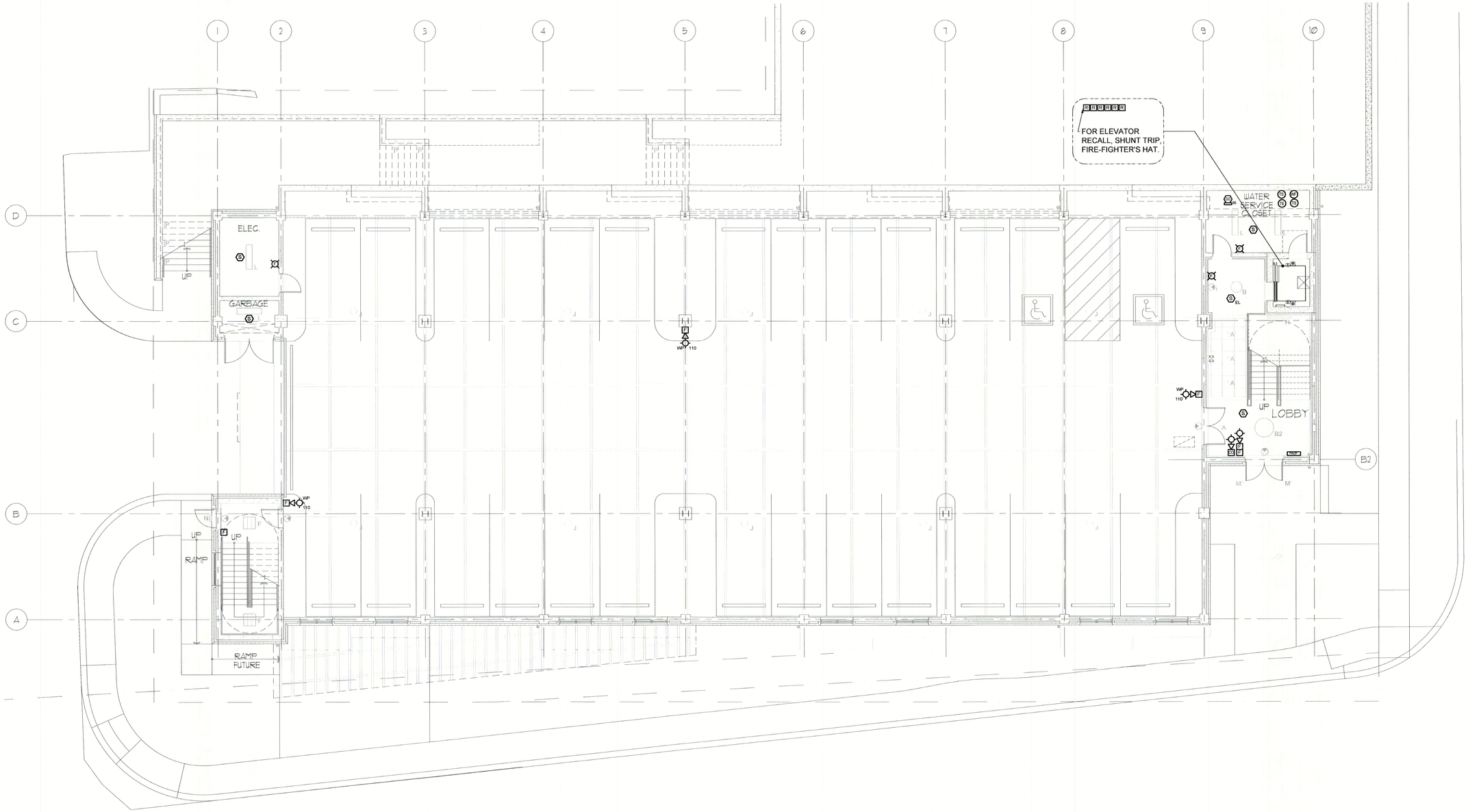

1 FIRE ALARM FIRST FLOOR PLAN
SCALE: 1/8" = 1'-0"

NORTH

LIBERTY PLAZA SUITES

500 COMMERCE STREET
HAWTHORNE, NY 10532

ARCHITECT

dimovski architecture
59 Kensico Road, Thornwood, NY 10594
(914) 747-3500 | (914) 747-3588 fax
www.dimovskiarchitecture.com

STRUCTURAL ENGINEER

CHARLES A. MANGANARO
CONSULTING ENGINEERS
A PROFESSIONAL CORPORATION
303 SOUTH BROADWAY, SUITE 223, TARRYTOWN, NY 10591-5488

SHAILESH R. NAIK, P.E.
NEW YORK LICENSE No. 072797-1

MEP ENGINEER

OLA Consulting Engineers
60 Broadway,
Hawthorne, NY 10532
914.747.2800
8 West 38th Street,
Suite 901
New York, NY 10018
646.848.4110
olaca.com

NO.	REVISION/ISSUE	DATE
3	ISSUED FOR PERMIT	03-12-2021
2	ISSUED FOR PROGRESS 90%	03-05-2021
1.	ISSUED FOR PROGRESS	02-19-2021

SEAL

STATE OF NEW YORK · JOHN TORRE · LICENSED PROFESSIONAL ENGINEER · 071678

PROJECT

LIBERTY PLAZA SUITES
500 COMMERCE ST.
TOWN OF MT. PLEASANT, NY

DATE:	AUGUST 12, 2020
PROJECT NO:	NDIM0001.00
DRAWN BY:	CT
CHECKED BY:	KS/DS
SCALE:	AS NOTED

DRAWING TITLE

FIRE ALARM FIRST FLOOR PLAN

SHEET NO.

FA1.1

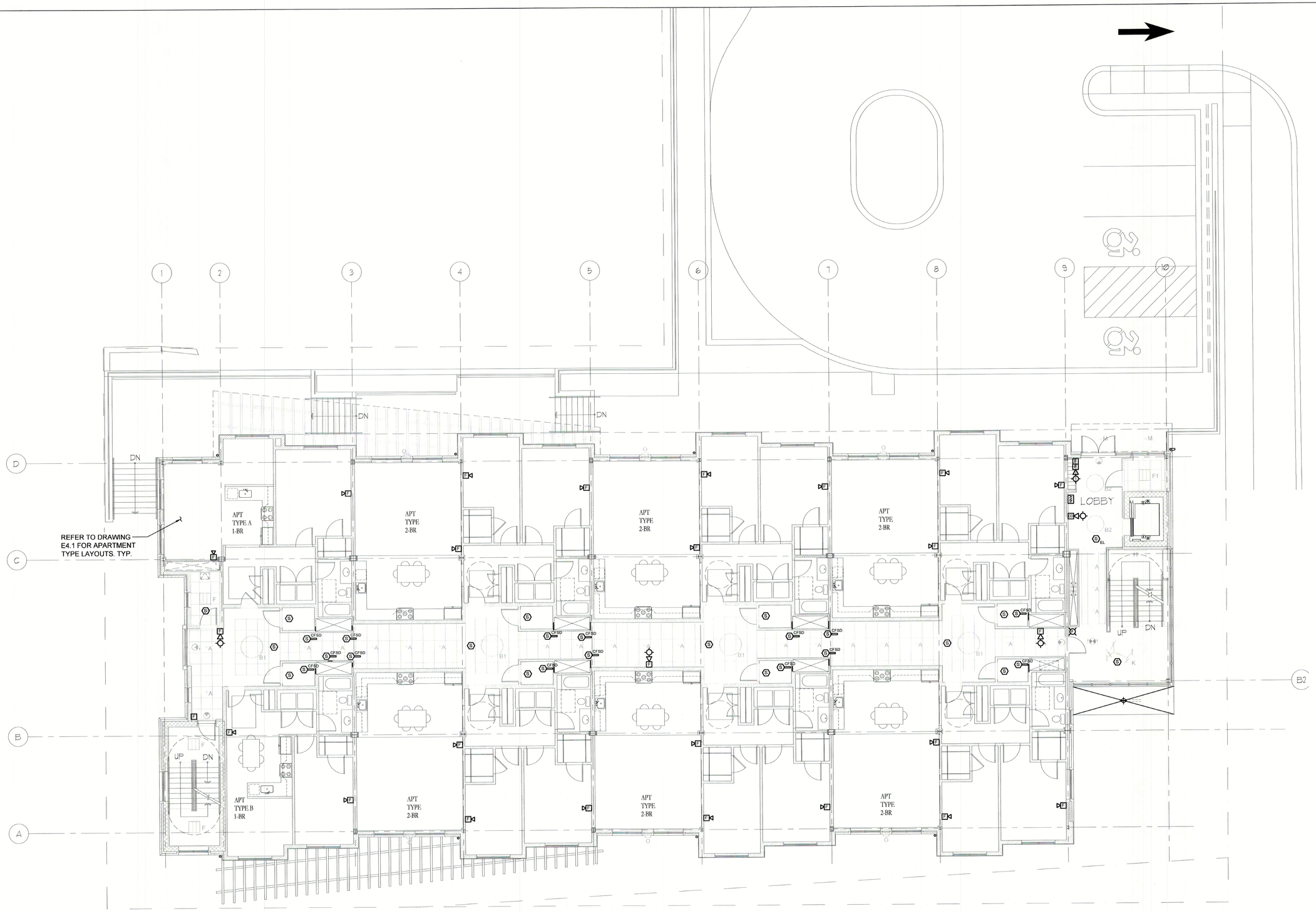

1 FIRE ALARM SECOND FLOOR PLAN
SCALE: 1/8" = 1'-0"

NORTH

LIBERTY PLAZA SUITES

500 COMMERCE STREET
HAWTHORNE, NY 10532

ARCHITECT

dimovski architecture
59 Kensico Road, Thornwood, NY 10594
(914) 747-3500 | (914) 747-3588 fax
www.dimovskiarchitecture.com

STRUCTURAL ENGINEER

CHARLES A. MANGANARO
CONSULTING ENGINEERS
A PROFESSIONAL CORPORATION
303 SOUTH BROADWAY, SUITE 223, TARRYTOWN, NY 10591-5488

SHAILESH R. NAIK, P.E.
NEW YORK LICENSE No. 072797-1

MEP ENGINEER

OLA Consulting Engineers
60 Broadway,
Hawthorne, NY 10532
914.747.2800
8 West 38th Street,
Suite 501
New York, NY 10018
646.848.4110
olace.com

NO.	REVISION/ISSUE	DATE
3	ISSUED FOR PERMIT	03-12-2021
2	ISSUED FOR PROGRESS 90%	03-05-2021
1.	ISSUED FOR PROGRESS	02-19-2021

SEAL

STATE OF NEW YORK · JOHN TORRE · 071678 · LICENSED PROFESSIONAL ENGINEER

PROJECT

LIBERTY PLAZA SUITES
500 COMMERCE ST.
TOWN OF MT. PLEASANT, NY

DATE:	AUGUST 12, 2020
PROJECT NO:	NDIM0001.00
DRAWN BY:	CT
CHECKED BY:	KS/DS
SCALE:	AS NOTED

DRAWING TITLE

FIRE ALARM SECOND FLOOR PLAN

SHEET NO.

FA1.2

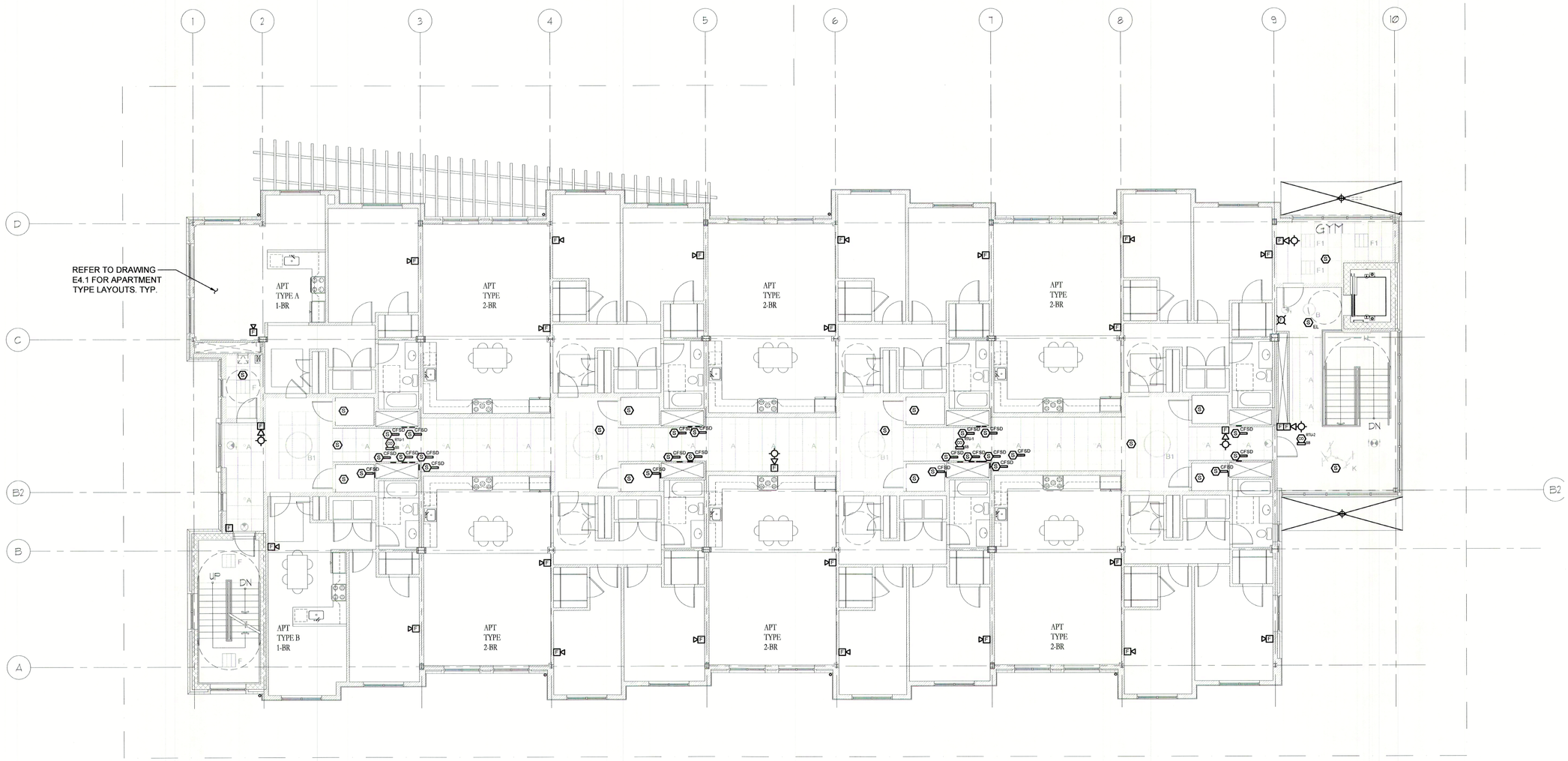

1 FIRE ALARM THIRD FLOOR PLAN
SCALE: 1/8" = 1'-0"

NORTH

LIBERTY PLAZA SUITES

500 COMMERCE STREET
HAWTHORNE, NY 10532

ARCHITECT

dimovski architecture p.c.
59 Kensico Road, Thornwood, NY 10594
(914) 747-3500 | (914) 747-3588 fax
www.dimovskiarchitecture.com

STRUCTURAL ENGINEER

CHARLES A. MANGANARO
CONSULTING ENGINEERS
A PROFESSIONAL CORPORATION
303 SOUTH BROADWAY, SUITE 223, TARRYTOWN, NY 10591-5488

SHAILESH R. NAIK, P.E.
NEW YORK LICENSE No. 072797-1

MEP ENGINEER

OLA Consulting Engineers
50 Broadway,
Hawthorne, NY 10532
914.747.2800
6 West 18th Street,
Suite 901
New York, NY 10018
646.848.4110
ola-ce.com

NO.	REVISION/ISSUE	DATE
3	ISSUED FOR PERMIT	03-12-2021
2	ISSUED FOR PROGRESS 90%	03-05-2021
1.	ISSUED FOR PROGRESS	02-19-2021

SEAL

STATE OF NEW YORK · JOHN TORRE · 071676 · LICENSED PROFESSIONAL ENGINEER

PROJECT

LIBERTY PLAZA SUITES
500 COMMERCE ST.
TOWN OF MT. PLEASANT, NY

DATE:	AUGUST 12, 2020
PROJECT NO:	NDIM0001.00
DRAWN BY:	CT
CHECKED BY:	KS/DS
SCALE:	AS NOTED

DRAWING TITLE

FIRE ALARM THIRD FLOOR PLAN

SHEET NO.

FA1.3

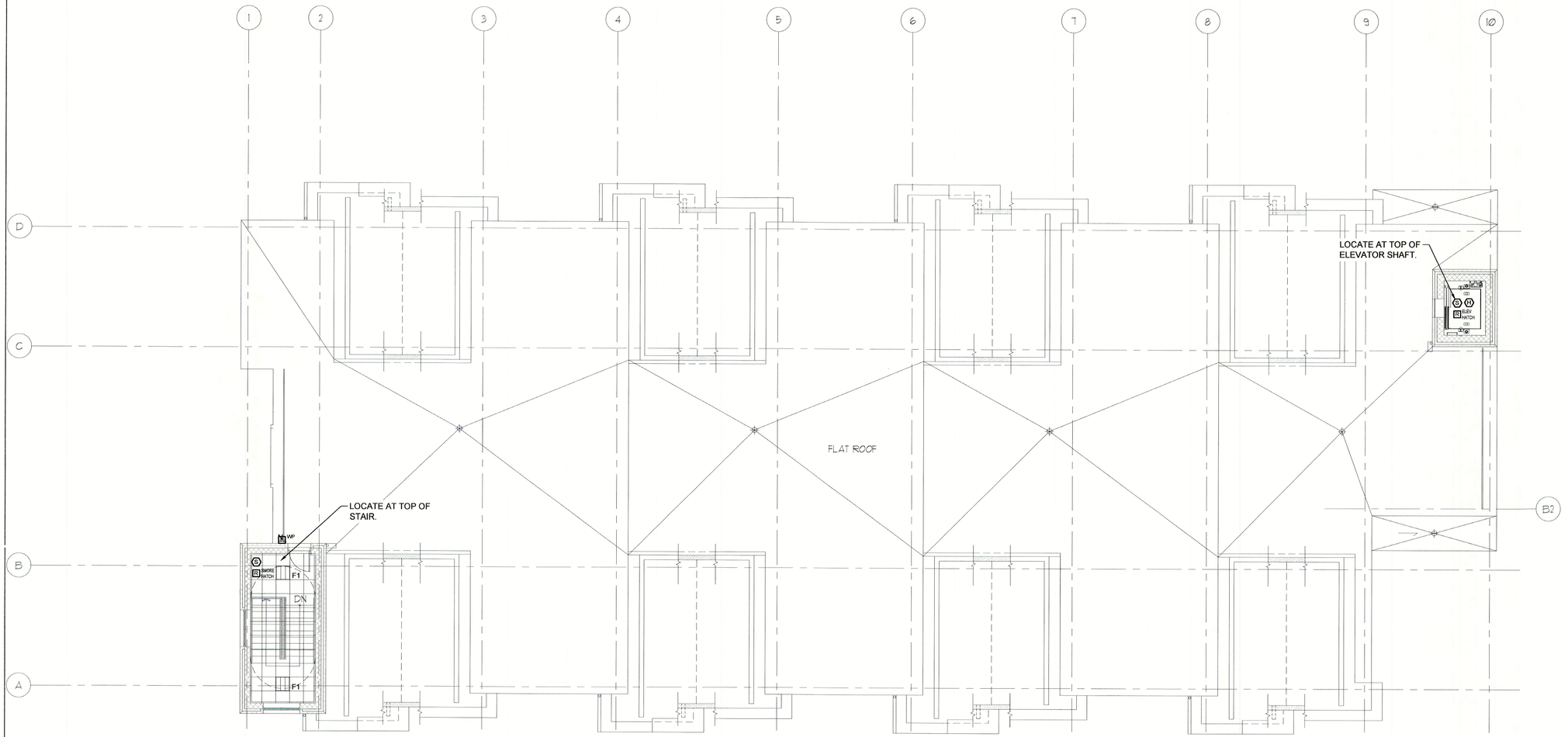

NORTH

1 FIRE ALARM FOURTH LEVEL ROOF PLAN

SCALE: 1/8" = 1'-0"

LIBERTY PLAZA SUITES

500 COMMERCE STREET
HAWTHORNE, NY 10532

ARCHITECT

dimovskiarchitecture
59 Kensico Road, Thornwood, NY 10594
(914) 747-3500 | (914) 747-3588 fax
www.dimovskiarchitecture.com

STRUCTURAL ENGINEER

CHARLES A. MANGANARO
CONSULTING ENGINEERS
A PROFESSIONAL CORPORATION
303 SOUTH BROADWAY, SUITE 223, TARRYTOWN, NY 10591-5488

SHAILESH R. NAIK, P.E.
NEW YORK LICENSE No. 072797-1

MEP ENGINEER

OLA Consulting Engineers
50 Broadway,
Hawthorne, NY 10532
914.747.2800

8 West 38th Street,
Suite 601
New York, NY 10018
646.849.4110

ola-ce.com

NO.	REVISION/ISSUE	DATE
1	DOB COMMENTS	04-26-2021
4	ISSUED FOR PRICING	03-16-2021
3	ISSUED FOR PERMIT	03-12-2021
2	ISSUED FOR PROGRESS 90%	03-05-2021
1.	ISSUED FOR PROGRESS	02-19-2021

SEAL

STATE OF NEW YORK
JOHN TORRE
071678
LICENSED PROFESSIONAL ENGINEER

PROJECT

LIBERTY PLAZA SUITES
500 COMMERCE ST.
TOWN OF MT. PLEASANT, NY

DATE:	AUGUST 12, 2020
PROJECT NO:	NDIM0001.00
DRAWN BY:	CT
CHECKED BY:	KS/DS
SCALE:	AS NOTED

DRAWING TITLE

FIRE ALARM FOURTH LEVEL ROOF PLAN

SHEET NO.

FA1.4

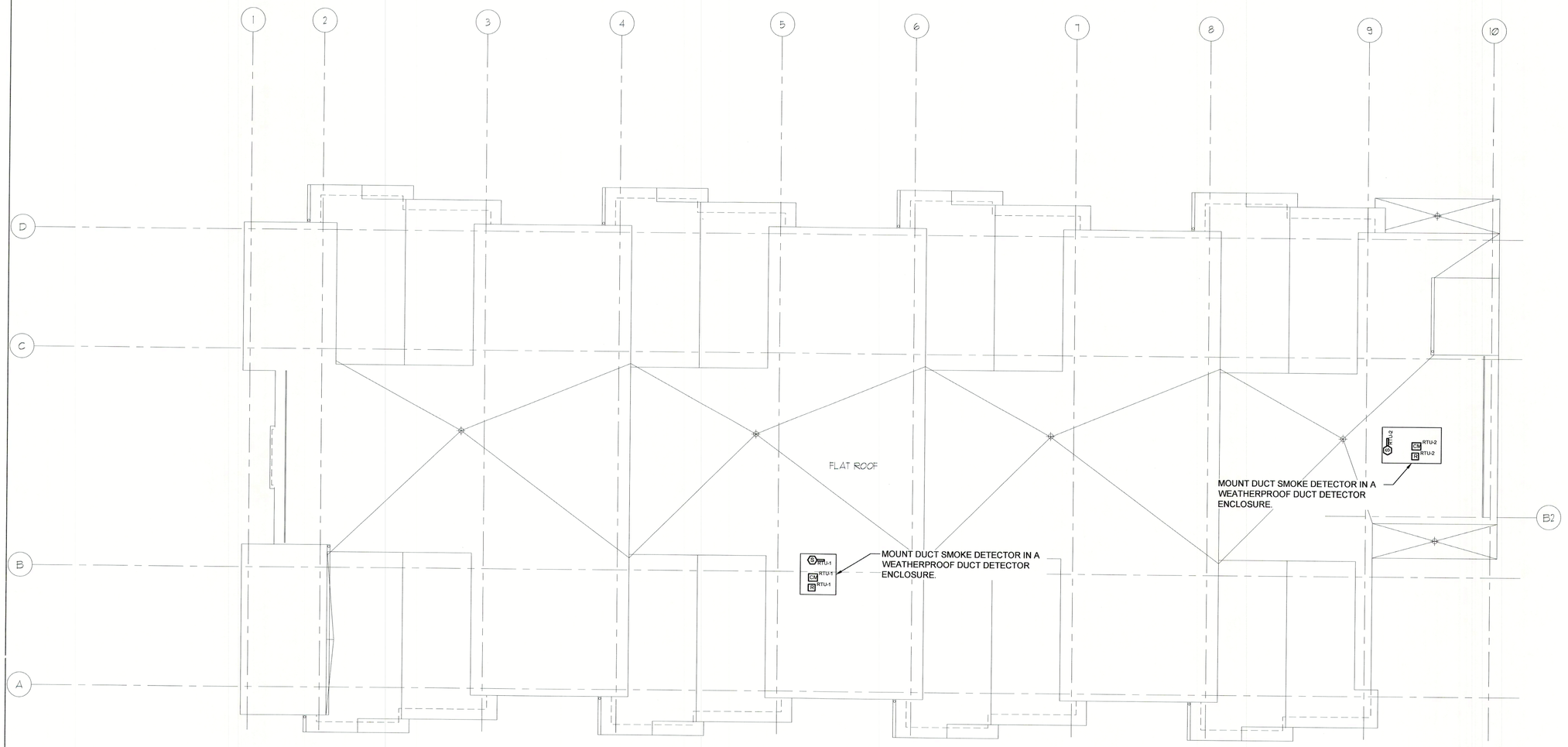

NORTH

1 FIRE ALARM ROOF PLAN
SCALE: 1/8" = 1'-0"

LIBERTY PLAZA SUITES

500 COMMERCE STREET
HAWTHORNE, NY 10532

ARCHITECT

dimovski architecture
59 Kensico Road, Thornwood, NY 10594
(914) 747-3500 | (914) 747-3588 fax
www.dimovskiarchitecture.com

STRUCTURAL ENGINEER

CHARLES A. MANGANARO
CONSULTING ENGINEERS
A PROFESSIONAL CORPORATION
303 SOUTH BROADWAY, SUITE 223, TARRYTOWN, NY 10591-5488

SHAILESH R. NAIK, P.E.
NEW YORK LICENSE No. 072797-1

MEP ENGINEER

OLA Consulting Engineers
50 Broadway,
Hawthorne, NY 10532
914.747.2800
8 West 38th Street,
Suite 501
New York, NY 10018
646.849.4110
ola-ce.com

NO.	REVISION/ISSUE	DATE
3	ISSUED FOR PERMIT	03-12-2021
2	ISSUED FOR PROGRESS 90%	03-05-2021
1.	ISSUED FOR PROGRESS	02-19-2021

SEAL

STATE OF NEW YORK · JOHN TORRE · 071678 · LICENSED PROFESSIONAL ENGINEER

PROJECT

LIBERTY PLAZA SUITES
500 COMMERCE ST.
TOWN OF MT. PLEASANT, NY

DATE:	AUGUST 12, 2020
PROJECT NO:	NDIM0001.00
DRAWN BY:	CT
CHECKED BY:	KS/DS
SCALE:	AS NOTED

DRAWING TITLE

FIRE ALARM ROOF PLAN

SHEET NO.

FA1.5

SYMBOLS AND ABBREVIATIONS

SYMBOL	ABBREVIATION	DESCRIPTION
———	EX.	EXISTING TO REMAIN
———	NEW	NEW WORK
———	DEM.	EXISTING TO BE REMOVED
○———	—	ELBOW UP
———○	—	ELBOW DOWN
———⊖———	—	TEE DOWN
———○———	—	TEE UP
———|	—	PIPE CAP OR FLUSHING CONNECTION
⋈	—	GATE VALVE
⋈	—	OS&Y GATE VALVE
⋈	—	BUTTERFLY VALVE
⋈	—	CHECK VALVE
⊕	—	UNION
T	—	TEMPERATURE GAGE
P	—	PRESSURE GAGE
FS	—	WATER FLOW SWITCH
TS	—	TAMPER SWITCH
⋈	—	INSPECTORS TEST CONNECTION
	—	FLOW ARROW
⋇	—	SPRINKLER GUARD
$●_N$	—	NEW PENDENT SPRINKLER, CONCEALED OR EXPOSED AS NOTED.
$○_N$	—	NEW UPRIGHT SPRINKLER
◄	—	SIDEWALL SPRINKLER
⊗	—	POINT OF CONNECTION
◔	—	POINT OF DISCONNECTION
N1	—	HYDRAULIC REFERENCE NODE
S2	—	HYDRAULIC REFERENCE SPRINKLER
⋈	FDC	FIRE DEPARTMENT CONNECTION
⊕	FP	FIRE PUMP
—	AFF	ABOVE FINISHED FLOOR
—	AHC	ABOVE HUNG CEILING
—	ATC	AT CEILING
—	BFP	BACKFLOW PREVENTOR
—	DCDA	DOUBLE CHECK DETECTOR ASSEMBLY
—	DCV	DOUBLE CHECK VALVE BFP
—	DN.	DOWN
—	FCA	FLOOR CONTROL ASSEMBLY
—	FD	FLOOR DRAIN
—	FLFD	FUNNEL FLOOR DRAIN
—	GPM	GALLONS PER MINUTE
—	JP	JOCKEY PUMP
—	NFPA	NATIONAL FIRE PROTECTION ASSOCIATION
—	(N0)	NORMALLY OPEN
—	(NC)	NORMALLY CLOSED
—	NTS	NOT TO SCALE
—	PRV	PRESSURE REDUCING VALVE
—	PSI	POUNDS PER SQUARE INCH
—	RPZ	REDUCED PRESSURE ZONE BFP
—	SF	SQUARE FOOT
—	TS	TAMPER SWITCH
—	TYP	TYPICAL
—	U.O.N.	UNLESS OTHERWISE NOTED

NOTE: FOR REFERENCE ONLY. NOT ALL SYMBOLS OR ABBREVIATIONS ARE USED IN THIS PROJECT.

GENERAL NOTES

1. THE REVISED SPRINKLER SYSTEM SHALL BE DESIGNED AND INSTALLED BY AN EXPERIENCED FIRE PROTECTION CONTRACTOR IN STRICT ACCORDANCE WITH NFPA-13, THE REQUIREMENTS OF THE LANDLORD, LANDLORD'S FIRE INSURANCE UNDERWRITER, AND ALL GOVERNMENTAL AGENCIES AND AUTHORITIES HAVING JURISDICTION OVER THE PREMESIS.
2. COORDINATE ALL WORK WITH OTHER TRADES TO MINIMIZE INTERFERENCES WITH NEW AND EXISTING FACILITIES, TO FACILITATE TIMELY COMPLETION AND AVOID NECESSITY FOR CUTTING AND PATCHING. FURNISH TO OTHER AFFECTED TRADES ALL NECESSARY INFORMATION, WORKING DRAWINGS OR MATERIALS REQUIRED FOR INSTALLATION AND COMPLETION OF ALL WORK. ALL CONFLICTS, OBSTRUCTIONS AND/OR MODIFICATIONS TO THE SPRINKLER DESIGN LAYOUT DUE TO FIELD CONDITIONS SHALL BE BROUGHT TO THE ATTENTION OF THE ENGINEER PRIOR TO FABRICATION AND INSTALLATION.
3. CONTRACTOR SHALL CONDUCT FLOW TEST TO ESTABLISH EXACT FLOW AND PRESSURE AVAILABLE ON THE SITE FOR PREPARATION OF HYDRAULIC CALCULATIONS.
4. ALTER PIPING AS REQUIRED TO SUIT NEW AND EXISTING CEILING HEIGHTS, DUCTWORK, AND LIGHTS. PROVIDE AT NO EXTRA COST ALL ADDITIONAL PIPING AND FITTINGS REQUIRED TO OFFSET SYSTEM TO AVOID STRUCTURAL, ARCHITECTURAL, MECHANICAL, AND ELECTRICAL INTERFERENCES, WHETHER INDICATED OR NOT, BEFORE INSTALLING WORK.
5. WHEN INSTALLING SPRINKLER HEADS, THE CONTRACTOR SHALL PROVIDE THE SHORTEST HYDRAULIC PIPE LENGTH BETWEEN THE FINAL SPRINKLER HEAD LOCATION AND THE BRANCH LINE CONNECTION. MINIMUM 1" FOR TWO HEADS, 1-1/4" FOR THREE HEADS AND 1-1/2" FOR FIVE HEADS.
6. EXACT LOCATION OF SPRINKLER HEADS IN FINISHED AREAS SHALL BE COORDINATED WITH ARCHITECTURAL REFLECTED CEILING PLANS. SPRINKLER HEADS INSTALLED IN HUNG CEILING WILL BE POSITIONED AS FOLLOWS: LOCATED WITH TOLERANCE ± 1/2" OF THE CENTERLINE OF THE TILES.
7. INSTALL SPRINKLER HEADS TIGHT TO BOTTOM OF HUNG CEILING WITH CARE THAT THE FINISH IS NOT DAMAGED.
8. WHEN CONCEALED TYPE SPRINKLER HEADS ARE USED, THE COVER PLATES WILL BE FLUSH WITH THE CEILING PLANE TO LIMIT SHADOW EFFECT. TOLERANCE GREATER THAN ± 1/8" IS UNACCEPTABLE.
9. PROVIDE TWO 2-1/2 GALLON PRESSURIZED WATER AND ONE 10 LB ABC DRY CHEMICAL EXTINGUISHERS FOR EMERGENCY USE DURING CONSTRUCTION.
10. SPRINKLER PLAN SHOWS NEW, EXISTING TO REMAIN AND SPRINKLER HEADS TO BE REMOVED ONLY. ADD SPRINKLER HEADS AS SHOWN ON PLAN AND REUSE EXISTING BRANCH PIPING. MODIFY, EXTEND, AND SHORTEN PIPING AS REQUIRED.
11. EXISTING FLOW, TAMPER AND ALARM DEVICES MUST BE TIED INTO THE BUILDING'S FIRE ALARM SYSTEM. ALL REQUIRED EXTENDER PANELS, CODE TRANSMITTERS, ETC. AS MAY BE REQUIRED TO INTEGRATE THE SYSTEM EXPANSION SHALL BE FURNISHED AND INSTALLED BY THE SPRINKLER CONTRACTOR.
12. EXISTING DRAIN VALVES AT MAIN SHUT-OFF VALVES, LOW POINTS, AND APPARATUS SHALL BE MAINTAINED.
13. PROVIDE ALL PIPE OPENINGS THROUGH PARTITIONS WITH PIPE SLEEVES. FOR PIPES PENETRATING FIRE RATED PARTITIONS, THE SPACE BETWEEN THE PIPE AND THE SLEEVE SHALL BE SEALED WITH A LISTED FIRE STOPPING ASSEMBLY OR MATERIAL.
14. ALL HOSE CONNECTION AND FIRE DEPARTMENT CONNECTION THREADS SHALL BE TESTED TO VERIFY COMPATIBILITY WITH THREADS USED BY LOCAL FIRE DEPARTMENT, IN ACCORDANCE WITH NFPA-14 (2013) SECTION 11.3.
15. THE CONTRACTOR SHALL MAKE A PROVISION FOR (5) EXTRA SPRINKLERS INCLUDING IMMEDIATE BRANCH PIPING, FITTINGS AND ARM-OVERS. THE CONTRACTOR SHALL COORDINATE WITH FINAL CONFIGURATION OF OPEN AND HUNG CEILINGS, ALL HVAC DUCTWORK AND PIPING AND STRUCTURAL ELEMENTS THROUGHOUT THE AREA OF WORK.

SPECIFICATIONS

F-1 WORK INCLUDED

A. PROVIDE ALL REQUIRED LABOR, MATERIALS, EQUIPMENT, HYDRAULIC CALCULATIONS, PERMITS, CERTIFICATES, INSPECTION, TESTING AND OTHER SERVICES NECESSARY OR REQUIRED FOR COMPLETE SAFE INSTALLATION OF WORK IN FULL CONFORMANCE WITH NFPA-13 REQUIREMENTS; ALL AS INDICATED ON DRAWINGS AND/OR HEREIN SPECIFIED.

B. INSTALL WORK IN NEAT AND APPROVED MANNER. RESTORE EXISTING PIPING DISTURBED IN MAKING SUCH CONNECTIONS TO PERFECT CONDITIONS.

C. ALL PIPING SHALL BE HUNG FROM EXISTING STRUCTURAL MEMBERS. PROVIDE AUXILIARY STEEL WHEN REQUIRED.

D. THE SPRINKLER CONTRACTOR SHALL SUBMIT HYDRAULIC CALCULATIONS FOR REVIEW PRIOR TO THE INSTALLATION OF THE NEW SPRINKLER WORK.

F-2 VISITING THE PREMISES

A. THE CONTRACTOR SHALL, BEFORE SUBMITTING A BID ON THE WORK, MUST VISIT THE SITE AND FAMILIARIZE HIMSELF WITH ALL VISIBLE EXISTING CONDITIONS. THE SUBMISSION OF A BID WILL BE CONSIDERED AN ACKNOWLEDGMENT ON THE PART OF THE BIDDER OF HIS VISITATION TO THE SITE. THE PLUMBING CONTRACTOR SHALL BE RESPONSIBLE FOR THE INSTALLATION OF THE WORK AS SHOWN ON THE DRAWINGS AND SPECIFIED HEREIN.

B. CONNECTIONS TO EXISTING UTILITIES IS ACCORDING TO THE BEST INFORMATION AVAILABLE. CONTRACTOR SHALL VERIFY EXISTING SERVICES IN FIELD AND CONNECT NEW SERVICES AS INDICATED ON DRAWINGS.

C. PRIOR TO FABRICATION THIS CONTRACTOR SHALL FIELD VERIFY ALL MEASUREMENTS AND CONDITIONS ON THE JOB SITE AND COORDINATE THIS WORK WITH THE WORK OF ALL OTHER TRADES.

F-3 QUALITY ASSURANCE

A. THE WORK SHALL BE EXECUTED IN STRICT ACCORDANCE WITH STATE AND CITY CODES. IN CASE OF CONFLICT BETWEEN THE CONTRACT DOCUMENTS AND A GOVERNING CODE OR ORDINANCE, THE MORE STRINGENT REQUIREMENTS SHALL APPLY.

B. UNLESS OTHERWISE SPECIFIED OR INDICATED, MATERIALS AND WORKMANSHIP SHALL CONFORM WITH THE LATEST EDITION OF THE FOLLOWING CODES AND STANDARDS: AMERICAN NATIONAL STANDARDS INSTITUTE (ANSI), UNDERWRITERS' LABORATORIES, INC. (UL)., AMERICAN SOCIETY FOR TESTING AND MATERIALS (ASTM), NATIONAL FIRE PROTECTION ASSOCIATION (NFPA), AND NATIONAL ELECTRIC CODE.

C. IF ANY WORK IS PERFORMED AND SUBSEQUENT CHANGES ARE NECESSARY TO CONFORM TO THE ORDINANCES, THE CHANGES SHALL BE MADE AT THE FIRE PROTECTION CONTRACTOR'S EXPENSE.

F-4 WORKMANSHIP AND MATERIALS

A. WORKMANSHIP SHALL BE OF THE BEST QUALITY AND NONE BUT COMPETENT MECHANICS SKILLED IN THEIR TRADES SHALL BE EMPLOYED. THE FIRE PROTECTION CONTRACTOR SHALL FURNISH THE SERVICES OF AN EXPERIENCED SUPERINTENDENT, WHO WILL BE CONSTANTLY IN CHARGE OF THE ERECTION OF THE WORK, UNTIL COMPLETED AND ACCEPTED.

B. UNLESS OTHERWISE HEREINAFTER SPECIFIED, ALL MATERIALS AND EQUIPMENT UNDER THIS SECTION OF THE SPECIFICATIONS SHALL BE NEW, OF BEST GRADE, AND AS LISTED IN PRINTED CATALOGS OF THE MANUFACTURER. EACH ARTICLE OF ITS KIND SHALL BE THE STANDARD PRODUCT OF A SINGLE MANUFACTURER.

C. THE ENGINEER SHALL HAVE THE RIGHT TO ACCEPT OR REJECT MATERIAL, EQUIPMENT, AND/OR WORKMANSHIP AND DETERMINE WHEN THE FIRE PROTECTION CONTRACTOR HAS COMPLIED WITH THE REQUIREMENTS HEREIN SPECIFIED.

D. ALL MANUFACTURED MATERIALS SHALL BE DELIVERED AND STORED IN THEIR ORIGINAL CONTAINERS.

F-5 GUARANTEE

A. ALL MATERIALS, EQUIPMENT, FIXTURES, PIPING, AND DEVICES SHALL BE GUARANTEED TO BE FREE FROM MECHANICAL DEFECTS OR FAULTY WORKMANSHIP FOR A PERIOD OF 1 YEAR FROM THE DATE OF WRITTEN ACCEPTANCE BY THE ENGINEER FOR THE OWNER.

B. LABOR AND MATERIAL REQUIRED TO FULFILL THE REQUIREMENTS OF THIS GUARANTEE SHALL BE FURNISHED TO THE OWNER BY THIS CONTRACTOR AT NO ADDITIONAL COST.

F-6 TIME AND MANNER

A. ALL WORK SHALL BE PERFORMED DURING NORMAL WORKING HOURS UNLESS OTHERWISE DIRECTED BY THE OWNERS REPRESENTATIVE OR NOTED ON THE PLANS

B. PRIOR TO THE BEGINNING OF WORK THE CONTRACTOR SHALL SUBMIT A SCHEDULE OF WORK TO THE OWNER BASED ON THE DATES GIVEN IN THE PREBID MEETING.

F-7 CUTTING AND PATCHING

A. PIPING PASSING THROUGH WALLS SHALL HAVE A TRIM OPENING CUT NO GREATER THAN NECESSARY FOR THE INSTALLATION OF A SLEEVE SECURED THEREIN.

B. PIPING PASSING THROUGH CONCRETE FLOORS SHALL HAVE THE OPENING CORE DRILLED SO THAT THE SPACE BETWEEN THE OPENING AND THE PIPE SHALL NOT EXCEED ONE-HALF INCH.

C. ANNULAR SPACES BETWEEN PIPING AND SLEEVES OR CORE DRILLED FLOOR OPENING AND WALLS SHALL BE PACKED WITH MINERAL WOOL AND SEALED, TO RETAIN THE FIRE INTEGRITY OF THE WALLS AND FLOORS, WITH A NON-HARDENING COMPOUND SIMILAR OR EQUAL TO DUXSEAL AS MANUFACTURED BY J.M. CLIPPER CORPORATION.

D. FOR DETAILS OF FLOOR CORING RESTRICTIONS, REFER TO THE BASE BUILDING STRUCTURAL DRAWING.

F-8 SUBMITTALS

A. SHOP DRAWINGS.

1. SPRINKLER HEADS.
2. HANGERS, SUPPORTS AND INSERTS.
3. PIPE AND FITTINGS.
4. SLEEVES AND ESCUTCHEONS.
5. DRY VALVES
6. SUBMIT FIELD TEST AND RESULT IN ACCORDANCE WITH NFPA FORMS.
7. PIPING LAYOUT COORDINATED WITH ALL TRADES. INCLUDE ON EACH WORKING DRAWING LAYOUT CERTIFICATE THAT ALL RELATED CONDITIONS HAVE BEEN CHECKED WITH ALL TRADES, AND THAT NO CONFLICT EXISTS. SUBMISSION WILL NOT BE APPROVED WITHOUT SUCH CERTIFICATE.
8. HYDRAULIC CALCULATIONS. NOTE: SHOP DRAWINGS AND HYDRAULIC CALCULATIONS ARE TO BE SIGNED AND SEALED BY A REGISTERED PROFESSIONAL ENGINEER.
9. CONTRACTOR SHALL SUBMIT 3 COPIES OF AS-BUILT DRAWINGS AT COMPLETION OF WORK.

B. AS BUILT DRAWINGS.

1. PROVIDE SHOP DRAWING FOR SPRINKLER INSTALLATION. THE FINAL AS-BUILT SHOP DRAWING SHALL BE A MINIMUM OF 1/4" SCALE. THE DRAWING SHALL ALSO SHOW THE EXISTING SPRINKLER INSTALLATION ON THE FLOOR, SUPPLY VALVE, ALL PIPE ELEVATIONS, SIZES AND DIMENSIONS.

F-9 MATERIALS - GENERAL

A. TYPE AND SIZE OF MATERIALS SHALL BE APPROVED BY LOCAL FIRE INSPECTOR LOCAL BUILDING DEPARTMENT, NFPA AND OWNER'S INSURANCE UNDERWRITERS. SYSTEM AS INSTALLED SHALL MEET REQUIREMENTS OF THE ENGINEER AND RECEIVE APPROVAL OF SAME BEFORE FINAL PAYMENT.

B. ALL MATERIALS SHALL BE "UL" LISTED AND "FM" APPROVED.

F-10 PIPE

A. SPRINKLER: STANDARD WEIGHT SCHEDULE 40 BLACK STEEL PIPE, SEAMLESS OR WELDED MILD STEEL, CONFORMING TO ASTM A-795/A-53.

B. SCHEDULE 10 PIPING IS NOT PERMITTED FOR PIPE SIZES 1-1/2" AND SMALLER.

F-11 FITTINGS

A. SPRINKLER

1. CAST IRON: THREADED CLASS 125, ANSI B-16.4.
2. MALLEABLE IRON: CLASS 150 THREADED, ANSI B-16.3
3. NIPPLES SHALL BE EXTRA-HEAVY SHOULDER TYPE OF SAME MATERIAL AS PIPE. CLOSE NIPPLES ARE NOT ACCEPTABLE.
4. BUSHINGS ARE NOT PERMITTED.

F-12 SLEEVES AND ESCUTCHEONS

A. SLEEVES FOR PIPING PASSING THROUGH MASONRY WALLS SHALL BE BE SCHEDULE 40, STANDARD GALVANIZED STEEL PIPE, IN FRAMED PARTITIONS SHALL BE 20 GAUGE SHEET METAL. THE SPACE BETWEEN THE PIPE AND IT'S SLEEVE SHALL NOT EXCEED ONE-HALF INCH. THE SLEEVE SHALL HAVE A SUFFICIENT LENGTH TO BE FLUSHED WITH THE FINISHED WALL SURFACES.

B. EXPOSED PIPING PASSING THROUGH WALLS, FLOORS OR CEILING SHALL BE FITTED WITH CHROMIUM PLATED CAST BRASS ESCUTCHEONS WITH FASTENING SET SCREWS SIMILAR TO FEE AND MASON MANUFACTURING CO., F. & S. MANUFACTURING CO., OR RITTER PATTERN AND CASTING CO.

F-13 DRAINAGE

A. PROVISIONS SHALL BE MADE FOR COMPLETE DRAINAGE OF THE SYSTEM.

F-14 HANGERS AND SUPPORTS

A. UNLESS OTHERWISE SPECIFICALLY APPROVED, HANGER SIZE AND SPACING SHALL BE WITHIN FOLLOWING LIMITS:

PIPING SIZE	MAX. HANGER SPACING	MIN. ROD SIZE
1" TO 1-1/4"	12 FT. O.C.	3/8"
1-1/2" TO 2"	15 FT. O.C.	3/8"
2-1/2" TO 3-1/2"	15 FT. O.C.	3/8"
4"	15 FT. O.C.	3/8"

THE ABOVE HANGER SPACING APPLIES TO STRAIGHT RUNS OF PIPE ONLY AT POINTS WHERE VALVES, SPECIALTIES OR BRANCH CONNECTIONS ARE LOCATED, ADDITIONAL HANGERS OR SUPPORTS SHALL BE USED TO PROPERLY SUPPORT THE LOAD.

B. ALL PIPE HANGERS, INSERTS, SUPPLEMENTAL STEEL, RODS, AND COMPONENTS SHALL BE GALVANIZED.

C. BRACE HEADS FROM STRUCTURE TO PREVENT UPTHRUST DURING DISCHARGE.

D. ALL PIPING SHALL BE SUPPORTED TO MEET ALL APPLICABLE REQUIREMENTS IN ACCORDANCE WITH THE SEISMIC CODES OF THE CITY OF NEW YORK.

E. PROVIDE HANGERS AT A MAXIMUM DISTANCE OF 2 FEET FROM ALL CHANGES IN DIRECTION (HORIZONTAL AND VERTICAL) ON BOTH SIDES OF CONCENTRATED LOADS INDEPENDENT OF THE PIPING.

F-15 INSULATION

A. INSULATE ALL SPRINKLER PIPING AND FITTINGS WITHIN (15) FIFTEEN FEET OF EXTERIOR WALL. PIPE INSULATION SHALL BE ONE IN. THICK, MANVILLE MICRO LOCK FIBERGLASS WITH ALL SERVICE JACKET, OR AN APPROVED EQUAL.

B. ALL INSULATION SHALL HAVE COMPOSITE FIRE AND SMOKE HAZARD RATINGS OF NFPA 90A AS DETERMINED BY UNDERWRITERS' LABORATORIES PROCEDURE, ASTM E-84-50T, NFPA 255, AND UL 723 NOT EXCEEDING: FLAMESPREAD=25; SMOKE DEVELOPED=50.

C. ALL PIPE COVERING SPECIFIED HEREIN FOR PIPING SYSTEMS SHALL BE FURNISHED AND INSTALLED BY A COMPETENT PIPE COVERING CONTRACTOR RESPONSIBLE TO THE FIRE PROTECTION CONTRACTOR. BEFORE COVERING IS APPLIED, ALL PRESSURE TESTS SHALL HAVE BEEN PERFORMED AND APPROVED, WITH ALL SURFACES TO BE COVERED SHALL HAVE BEEN CLEANED.

F-16 PIPING INSTALLATION - GENERAL REQUIREMENTS

A. REAM PIPE AND TUBE ENDS. REMOVE BURRS. REMOVE SCALE AND DIRT ON INSIDE AND OUTSIDE BEFORE ASSEMBLY. BLOW OUT PIPE BEFORE NOZZLES OR DISCHARGE DEVICES ARE INSTALLED.

B. ROUTE PIPING IN ORDERLY MANNER, CONCEALED, PLUMB AND PARALLEL TO BUILDING STRUCTURE, AND MAINTAIN GRADIENT. INSTALL PIPING TO CONSERVE BUILDING SPACE, AND NOT INTERFERE WITH USE OF SPACE AND OTHER WORK.

C. SECURELY SUPPORT PIPING WITH ALLOWANCE FOR FIRE EXTINGUISHING THRUST FORCES AND THERMAL EXPANSION AND CONTRACTION.

LIBERTY PLAZA SUITES

500 COMMERCE STREET
HAWTHORNE, NY 10532

ARCHITECT

dimovski architecture PLLC
59 Kensico Road, Thornwood, NY 10594
(914) 747-3500 | (914) 747-3588 fax
www.dimovskiarchitecture.com

STRUCTURAL ENGINEER

CHARLES A. MANGANARO
CONSULTING ENGINEERS
A PROFESSIONAL CORPORATION
303 SOUTH BROADWAY, SUITE 223, TARRYTOWN, NY 10591-5488

SHAILESH R. NAIK, P.E.
NEW YORK LICENSE No. 072797-1

MEP ENGINEER

OLA Consulting Engineers
60 Broadway,
Hawthorne, NY 10532
914.747.2600

8 West 38th Street,
Suite 501
New York, NY 10018
646.848.4110

olace.com

NO.	REVISION/ISSUE	DATE
3	ISSUED FOR PERMIT	03-12-2021
2	ISSUED FOR PROGRESS 90%	03-05-2021
1.	ISSUED FOR PROGRESS	02-19-2021

SEAL

STATE OF NEW YORK
JOHN TOMEI
LICENSED PROFESSIONAL ENGINEER
071678

PROJECT

LIBERTY PLAZA SUITES
500 COMMERCE ST.
TOWN OF MT. PLEASANT, NY

DATE:	AUGUST 12, 2020
PROJECT NO:	NDIM0001.00
DRAWN BY:	HLD
CHECKED BY:	RJ
SCALE:	AS NOTED

DRAWING TITLE

SPRINKLER SYMBOLS ABBREVIATIONS, GENERAL NOTES AND SPECIFICATIONS

SHEET NO.

SP0.1

SPECIFICATIONS CONTINUED

D. USE GROOVED MECHANICAL COUPLINGS AND FASTENERS ONLY IN ACCESSIBLE LOCATIONS. ROLL GROOVE PIPING ONLY.

E. INSTALL UNIONS DOWNSTREAM OF VALVES AND AT EQUIPMENT OR APPARATUS CONNECTIONS.

F. PREPARE PIPE, FITTINGS, SUPPORTS, AND ACCESSORIES FOR FINISH PAINTING.

G. MAKE FINAL CONNECTIONS BETWEEN EQUIPMENT AND SYSTEM WIRING UNDER DIRECT SUPERVISION OF FACTORY TRAINED REPRESENTATIVE OF MANUFACTURER.

H. AT HAZARD AREA WALLS PACK SPACE BETWEEN PIPE, PIPE SLEEVE OR SURFACE PENETRATION WITH MINERAL FIBER WITH ELASTOMER CAULK TO DEPTH OF 3 INCH. PROVIDE ESCUTCHEONS WHERE EXPOSED PIPING PASSES THROUGH WALLS, FLOORS, AND CEILINGS. SEAL PIPE PENETRATIONS OF FIRE SEPARATIONS.

F-17 VALVES

A. VALVES SHALL BE FULL LINE SIZE UNLESS OTHERWISE NOTED.

B. VALVES SHALL BE CAPABLE OF BEING REPACKED WHILE WIDE OPEN AND OPERATING AT THEIR RATED PRESSURE.

C. UNLESS OTHERWISE NOTED OR REQUIRED BY THE APPLICATION, SCREWED VALVES SHALL BE OF BRONZE CONSTRUCTION AND FLANGED VALVES OF CAST IRON CONSTRUCTION WITH BRONZE TRIM. GLOBE AND CHECK VALVE DISCS SHALL BE IN ACCORDANCE WITH MANUFACTURERS RECOMMENDATIONS FOR THE SERVICE. ALL CAST IRON BODY VALVES SHALL HAVE RENEWABLE BRONZE SEAT RINGS AND BRONZE SPINDLES.

1. GATE VALVES:
   - UP TO AND INCLUDING 2 INCHES:
     a. BRONZE BODY, BRONZE TRIM, RISING STEM, HANDWHEEL, SOLID WEDGE OR DISC, THREADED ENDS.
   - OVER 2 INCHES:
     a. IRON BODY, BRONZE TRIM, RISING STEM PRE-GROOVED FOR MOUNTING TAMPER SWITCH, HANDWHEEL, OS&Y, SOLID BRONZE OR CAST IRON WEDGE, FLANGED ENDS.

2. BALL VALVES:
   - UP TO AND INCLUDING 1 INCHES:
     a. BRONZE TWO PIECE BODY, BRASS, CHROME PLATED BRONZE, OR STAINLESS STEEL BALL, TEFLON SEATS AND STUFFING BOX RING, LEVER HANDLE AND BALANCING STOPS, THREADED, FULL PORT.
   - OVER 1 INCHES:
     a. BRONZE TWO PIECE BODY, BRASS, CHROME PLATED BRONZE, OR STAINLESS STEEL BALL, TEFLON SEATS AND STUFFING BOX RING, LEVER HANDLE AND BALANCING STOPS, THREADED, STANDARD PORT.

3. CHECK VALVES
   - UP TO AND INCLUDING 2 INCHES:
     a. BRONZE BODY AND SWING DISC, RUBBER SEAT, THREADED ENDS.
   - OVER 2 INCHES:
     b. IRON BODY, BRONZE TRIM, SWING CHECK WITH RUBBER DISC, RENEWABLE DISC AND SEAT, FLANGED ENDS.
   - PUMP DISCHARGE:
     a. SPRING LOAD CHECK VALVE, GOLBE VALVE PATTERN.

4. DRAIN VALVES:
   - UP TO AND INCLUDING 3 INCHES:
     a. BRONZE WITH SCREW-IN BONNET, RENEWABLE DISC, AND INTEGRAL SEAT.

5. BUTTERFLY VALVES:
   - 1-1/2 INCHES AND LARGER:
     a. 200 PSI, CAST OR DUCTILE IRON BODY, ALUMINUM BRONZE DISC, RESILIENT REPLACEABLE SEAT, WAFER OR GROOVED ENDS, EXTENDED NECK, HANDWHEEL AND GEAR DRIVE AND INTEGRAL INDICATING DEVICE.

F-18 GAUGES

A. PRESSURE GAUGES SHALL BE PROVIDE AS SHOWN ON PIPING DETAILS AND AS SPECIFIED.

B. ALL GAUGES SHALL BE LOCATED TO BE EASILY READABLE FROM THE FLOOR.

C. MINIMUM 1/4" GAUGE COCKS SHALL BE PROVIDED BETWEEN PIPING AND ALL GAUGES.

D. INSTRUMENTS SHALL BE SELECTED SO THAT THE NORMAL RANGE OF OPERATING PRESSURE FALLS WITHIN THE MIDDLE-THIRD OF THE INSTRUMENT RANGE. COMPOUND GAUGES SHALL BE USED WHEN NORMAL OPERATING PRESSURE IS NEAR OR BELOW ATMOSPHERIC.

E. MANUFACTURERS:
   1. TERICE MODEL 600C.
   2. WEKSLER MODEL REGAL.

F. 4-1/2" DIAMETER DIAL, CAST BRASS TYPE 'L' CASE, GLASS COVERED PHOSPHOR BRONZE BOURDON TUBE TYPE, BRONZE BUSHED ROTARY MOVEMENT AND SILVER BRAZED JOINTS.

F-19 REMOVALS

A. ALL UNUSED PIPING, HANGERS, SUPPORTS SHALL BE COMPLETELY REMOVED BACK TO THE NEAREST ACTIVE BRANCH MAIN AND CAPPED, SEALED WATERTIGHT, ALL THE OPENINGS RESULTING SHALL BE PROPERLY PATCHED, SEALED, AND FIRESTOPPED TO MAINTAIN THE ORIGINAL INTEGRITY OF THE PARTITION'S FIRE RATING. CAPPING AND PLUGGING OF PIPING SHALL BE DONE USING THE SAME MATERIAL AS THE PIPING.

B. DISPOSE OF WATER REMOVED FROM PIPELINES IN A MANNER SHALL NOT CAUSE DAMAGE TO ANY PROPERTY AND IN A CODE COMPLIANT MANNOR.

F-20 SHUTDOWNS

A. NO SHUT-DOWN OF EXISTING FIRE PROTECTION SYSTEMS SHALL BE DONE WITHOUT PRIOR WRITTEN PERMISSION FROM THE BUILDING MANAGEMENT. REQUESTS FOR SHUT DOWNS MUST BE DELIVERED TO THE MANAGEMENT OFFICE AT LEAST (2) TWO WORKING DAYS PRIOR TO THE REQUESTED SHUT DOWN AND SHALL BE SUBJECTED TO THE FINAL APPROVAL OF THE MANAGER. KEEP THE SHUT DOWN TIME TO A MINIMUM. DRAINAGE SHALL BE TO A PROPERLY CONNECTED RECEPTACLE WITHOUT CAUSING DAMAGE TO OTHER WORK AND PROPERTY. FIRE PROTECTION SYSTEM SHALL BE PLACED IN OPERATION AT THE END OF EACH WORK DAY.

B. THE CONTRACTOR SHALL PROVIDE TWO 2-1/2 GALLON PRESSURIZED WATER AND ONE 10 LB ABC DRY CHEMICAL EXTINGUISHER FOR EMERGENCY USE DURING ALTERATIONS.

F-21 ELECTRIC WIRING

A. THE ELECTRICAL CONTRACTOR WILL ERECT ALL STARTING EQUIPMENT FURNISHED UNDER THIS SECTION, EXCEPT STARTERS SPECIFIED TO BE FACTORY MOUNTED AND WIRED AS ALL INTEGRAL PART OF THE EQUIPMENT, AND WILL DO ALL WIRING NECESSARY TO SUPPLY POWER TO THE ELECTRIC MOTOR PROVIDED UNDER THIS SECTION, INCLUDING POWER TO THE STARTERS AND CONNECTIONS FROM STARTERS TO THE MOTORS.

B. THIS CONTRACTOR SHALL INSTALL ALL MOTOR CONTROL, TEMPERATURE CONTROL WIRING AND INTERLOCK WIRING EXCLUSIVE OF MOTOR POWER WIRING.

F-22 ELECTRIC MOTOR CONTROLS

A. FURNISH AND TURN OVER TO THE ELECTRICAL CONTRACTOR WHO SHALL ERECT AND WIRE THE SAME, SUITABLE STARTING CONTROLLING EQUIPMENT, AND DISCONNECT SWITCHES.

B. ALL CONTROLLERS SHALL BE ALLEN-BRADLEY, CUTLER-HAMMER, OR GENERAL ELECTRIC, FULLY ENCLOSED IN NEATLY FURNISHED VENTILATED BOXES. CONTROLLERS SHALL BE OF THE COMBINATION STARTER AND UNFUSED SWITCH TYPE.

C. ALL STARTERS FOR MOTORS 1/2 HORSEPOWER AND LARGER SHALL BE MAGNETIC ACROSS-THE-LINE TYPE WITH UNFUSED DISCONNECT SWITCH UNLESS OTHERWISE NOTED. SUCH STARTERS SHALL BE 208 VOLT, 3 PHASE, 60 CYCLE, A.C. SOURCE.

D. ALL MAGNETIC STARTERS SUBJECT TO MANUAL START SHALL HAVE MOMENTARY CONTACT START AND STOP BUTTONS BUILT INTO COVER. ALL MAGNETIC STARTERS SUBJECT TO ELECTRICAL INTERLOCKS OR AUTOMATIC CONTROLS SHALL HAVE HAND-OFF-AUTOMATIC SWITCHES BUILT INTO COVER.

E. ALL MAGNETIC STARTERS SHALL HAVE THERMAL OVERLOAD AND VOLTAGE PROTECTION IN EACH PHASE LEG. PROVIDE EACH STARTER WITH MINIMUM OF TWO AUXILIARY CONTACTS, ONE NORMALLY OPEN AND ONE NORMALLY CLOSED.

F-23 FIRE PUMP -NOT USED

F-24 JOCKEY PUMP - NOT USED

F-25 TESTS

A. PERFORM HYDROSTATIC TESTS FOR ALL SECTIONS OF THE PIPING SYSTEMS INSTALLED UNDER THIS SECTION, AT NOT LESS THAN 200 PSIG PRESSURE FOR TWO HOURS, OR AT 50 PSI IN EXCESS OF THE MAXIMUM PRESSURE TO BE MAINTAINED IN THE SYSTEM IS IN EXCESS OF 150 PSIG. THE TEST PRESSURE SHALL BE READ FROM A GAUGE LOCATED AT THE LOW ELEVATION POINT OF THE INDIVIDUAL SYSTEM, OR PORTION OF THE SYSTEM BEING TESTED.

B. TESTS SHALL BE MADE IN THE PRESENCE OF THE BUILDING REPRESENTITIVE. AT LEAST 48 HOURS NOTICE SHALL BE GIVEN IN ADVANCE OF ALL TESTS.

C. PROVIDE AND INSTALL NECESSARY EQUIPMENT, INSTRUMENTS, HARDWARE, TEMPORARY PIPING, VENTS, DRAINS, AND INCLUDE NECESSARY PERSONNEL REQUIRED TO PERFORM ALL TESTS.

D. ALL TESTS SHALL CONFORM TO THE REQUIREMENTS OF NFPA 14. RECORDS OF ALL TESTS SHALL BE MADE AVAILABLE FOR THE ENGINEER'S INSPECTION, AS REQUIRED.

E. SHOULD THE TESTS REVEALED ANY LEAKS OR DEFICIENCIES IN PIPING INSTALLED UNDER THIS SECTION, MAKE NECESSARY CORRECTIONS IMMEDIATELY AND FLUSH, CLEAN AND RETEST THE SYSTEM FOR THE OWNER'S APPROVAL AT NO COST TO THE OWNER.

F. REPAIR OR REPLACE ANY PORTION OF THE SYSTEM INSTALLED UNDER THIS SECTION THAT IS DAMAGED AS A RESULT OF TEST OPERATIONS AT NO COST TO THE OWNER.

F-26 SYSTEM PRESSURE TESTING

A. HYDROSTATIC TEST: TEST ALL SYSTEMS AT 200 PSI FOR 2 HOURS MINIMUM WITHOUT LOSS OF PRESSURE OR WATER LEAKAGE.

B. DRY SYSTEM AIR TEST: IN ADDITION TO HYDROSTATIC TEST, CONDUCT AN AIR PRESSURE LEAKAGE TEST IN THE DRY SYSTEM AT 40 PSI FOR 24 HOURS WITHOUT LOSS OF PRESSURE IN EXCESS OF 1-1/2 PSI.

C. CONTRACTOR SHALL BE RESPONSIBLE DURING INSTALLATION AND TESTING FOR ANY DAMAGE CAUSED BY LEAKS.

F-27 SYSTEM INSPECTION AND CHECK OUT

A. AFTER THE SYSTEM INSTALLATION HAS BEEN COMPLETED, THE ENTIRE SYSTEM SHALL BE CHECKED OUT, INSPECTED AND FUNCTIONALLY TESTED BY QUALIFIED, TRAINED PERSONNEL, IN ACCORDANCE WITH THE MANUFACTURER'S RECOMMENDED PROCEDURES AND NFPA STANDARDS.

B. ALL PIPING SHALL BE CHECKED FOR PROPER MOUNTING AND INSTALLATION.

C. ALL ELECTRICAL WIRING SHALL BE TESTED FOR PROPER CONNECTION, CONTINUITY AND RESISTANCE TO GROUND.

D. THE COMPLETE SYSTEM SHALL BE FUNCTIONALLY TESTED, IN THE PRESENCE OF THE OWNER OR HIS REPRESENTATIVE, AND ALL FUNCTIONS, INCLUDING SYSTEM AND EQUIPMENT INTERLOCKS, MUST BE OPERATIONAL AT LEAST FIVE (5) DAYS PRIOR TO THE FINAL ACCEPTANCE TEST.

1. EACH DETECTOR SHALL BE TESTED IN ACCORDANCE WITH THE MANUFACTURER'S RECOMMENDED PROCEDURES, AND TEST VALUES RECORDED.

2. ALL SYSTEM AND EQUIPMENT INTERLOCKS, SUCH AS DOOR RELEASE DEVICES, AUDIBLE AND VISUAL DEVICES, EQUIPMENT SHUTDOWNS, LOCAL AND REMOTE ALARMS, ETC. SHALL FUNCTION AS REQUIRED AND DESIGNED.

3. EACH CONTROL PANEL CIRCUIT SHALL BE TESTED FOR TROUBLE BY INDUCING A TROUBLE CONDITION INTO THE SYSTEM.

E. THE INSTALLING CONTRACTOR SHALL PROVIDE TWO (2) INSPECTIONS OF EACH SYSTEM, INSTALLED UNDER THIS CONTRACT, DURING THE ONE-YEAR WARRANTY PERIOD. THE FIRST INSPECTION SHALL BE AT THE SIX MONTH INTERVAL, AND THE SECOND INSPECTION AT THE 12 MONTH INTERVAL, AFTER SYSTEM ACCEPTANCE. INSPECTIONS SHALL BE CONDUCTED IN ACCORDANCE WITH THE MANUFACTURER'S GUIDELINES AND SHALL COMPLY WITH THE RECOMMENDATIONS OF NFPA13.

F. DOCUMENTS CERTIFYING SATISFACTORY SYSTEM(S) OPERATION SHALL BE SUBMITTED TO THE OWNER UPON COMPLETION OF EACH INSPECTION.

F-28 MISCELLANEOUS

A. THE CONTRACTOR SHALL PROVIDE THE OWNERS WITH CATALOG DATA, OPERATING INSTRUCTIONS, MAINTENANCE INSTRUCTIONS AND RECORD (AS-BUILT) DRAWINGS OF ALL COMPLETED WORK.

B. ALL WORK SHALL BE GUARANTEED FOR A PERIOD OF ONE YEAR FROM THE DATE OF ACCEPTANCE BY THE OWNER.

END OF SPECIFICATIONS

LIBERTY PLAZA SUITES

500 COMMERCE STREET
HAWTHORNE, NY 10532

ARCHITECT

dimovski architecture P.C.
59 Kensico Road, Thornwood, NY 10594
(914) 747-3500 | (914) 747-3588 fax
www.dimovskiarchitecture.com

STRUCTURAL ENGINEER

CHARLES A. MANGANARO
CONSULTING ENGINEERS
A PROFESSIONAL CORPORATION
303 SOUTH BROADWAY, SUITE 223, TARRYTOWN, NY 10591-5488

SHAILESH R. NAIK, P.E.
NEW YORK LICENSE No. 072797-1

MEP ENGINEER

OLA Consulting Engineers
60 Brackett,
Hawthorne, NY 10532
914.747.2800
8 West 38th Street,
Suite 601
New York, NY 10018
646.848.4110
olace.com

NO.	REVISION/ISSUE	DATE
3	ISSUED FOR PERMIT	03-12-2021
2	ISSUED FOR PROGRESS 90%	03-05-2021
1.	ISSUED FOR PROGRESS	02-19-2021

SEAL

STATE OF NEW YORK · JOHN TOMRE · LICENSED PROFESSIONAL ENGINEER · 071676

PROJECT

LIBERTY PLAZA SUITES

500 COMMERCE ST.
TOWN OF MT. PLEASANT, NY

DATE:	AUGUST 12, 2020
PROJECT NO:	NDIM0001.00
DRAWN BY:	HLD
CHECKED BY:	RJ
SCALE:	AS NOTED

DRAWING TITLE

SPRINKLER SPECIFICATIONS

SHEET NO.

SP0.2

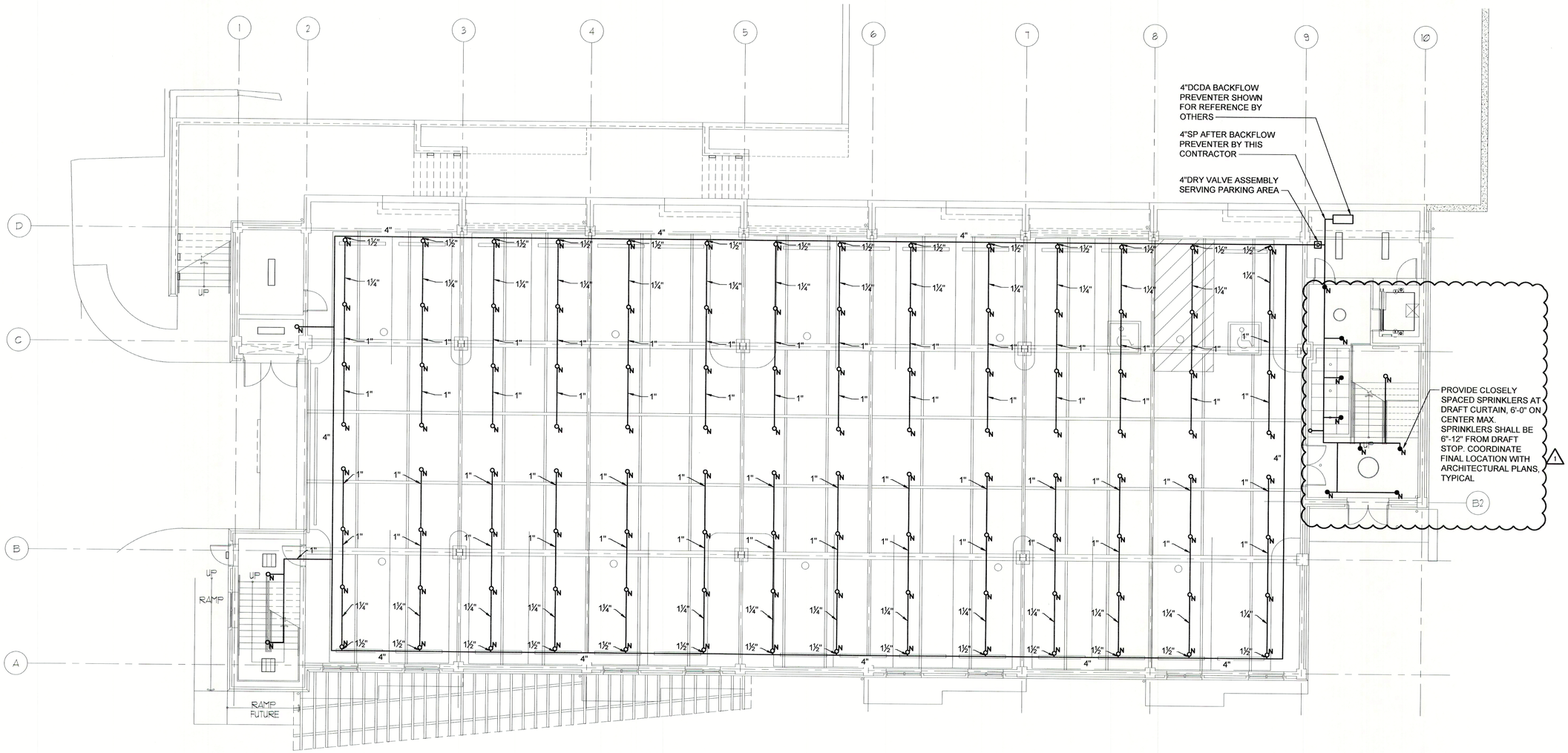

NORTH

1 SPRINKLER FIRST FLOOR PLAN
SCALE: 1/8" = 1'-0"

LIBERTY PLAZA SUITES

500 COMMERCE STREET
HAWTHORNE, NY 10532

ARCHITECT

dimovski architecture P.L.L.C.
59 Kensico Road, Thornwood, NY 10594
(914) 747-3500 | (914) 747-3588 fax
www.dimovskiarchitecture.com

STRUCTURAL ENGINEER

CHARLES A. MANGANARO
CONSULTING ENGINEERS
A PROFESSIONAL CORPORATION
303 SOUTH BROADWAY, SUITE 223, TARRYTOWN, NY 10591-5488

SHAILESH R. NAIK, P.E.
NEW YORK LICENSE No. 072797-1

MEP ENGINEER

OLA Consulting Engineers
60 Broadway,
Hawthorne, NY 10532
914.747.2800
8 West 38th Street,
Suite 901
New York, NY 10018
646.849.4110
olaca.com

NO.	REVISION/ISSUE	DATE
1	DOB COMMENTS	04-26-2021
4	ISSUED FOR PRICING	03-16-2021
3	ISSUED FOR PERMIT	03-12-2021
2	ISSUED FOR PROGRESS 90%	03-05-2021
1.	ISSUED FOR PROGRESS	02-19-2021

SEAL

STATE OF NEW YORK
JOHN TOMEI
071678
LICENSED PROFESSIONAL ENGINEER

PROJECT

LIBERTY PLAZA SUITES
500 COMMERCE ST.
TOWN OF MT. PLEASANT, NY

DATE:	AUGUST 12, 2020
PROJECT NO:	NDIM0001.00
DRAWN BY:	HLD
CHECKED BY:	RJ
SCALE:	AS NOTED

DRAWING TITLE

SPRINKLER FIRST FLOOR NEW WORK PLAN

SHEET NO.

SP2.1

PIPE SIZING SCHEDULE

SIZE	LIGHT HAZARD QTY SPRINKLERS	ORDINARY HAZARD QTY SPRINKLERS
1"	2	2
1¼"	3	3
1½"	5	5
2"	10	10
2½"	30	20
3"	60	40
3½"	100	65
4"	SEE NOTE 3	100

NOTES:
1. IN ACCORDANCE WITH NFPA 13 - 2019 EDITION - TABLES 27.5.2.2.1 & 27.5.3.4
2. ALL PIPING BASED ON SCHEDULE 40 BLACK STEEL.
3. AREAS REQUIRING MORE SPRINKLERS THAN SPECIFIED FOR 3½" SHALL BE SUPPLIED BY MAINS OR RISERS SIZED FOR ORDINARY HAZARD OCCUPANCIES.

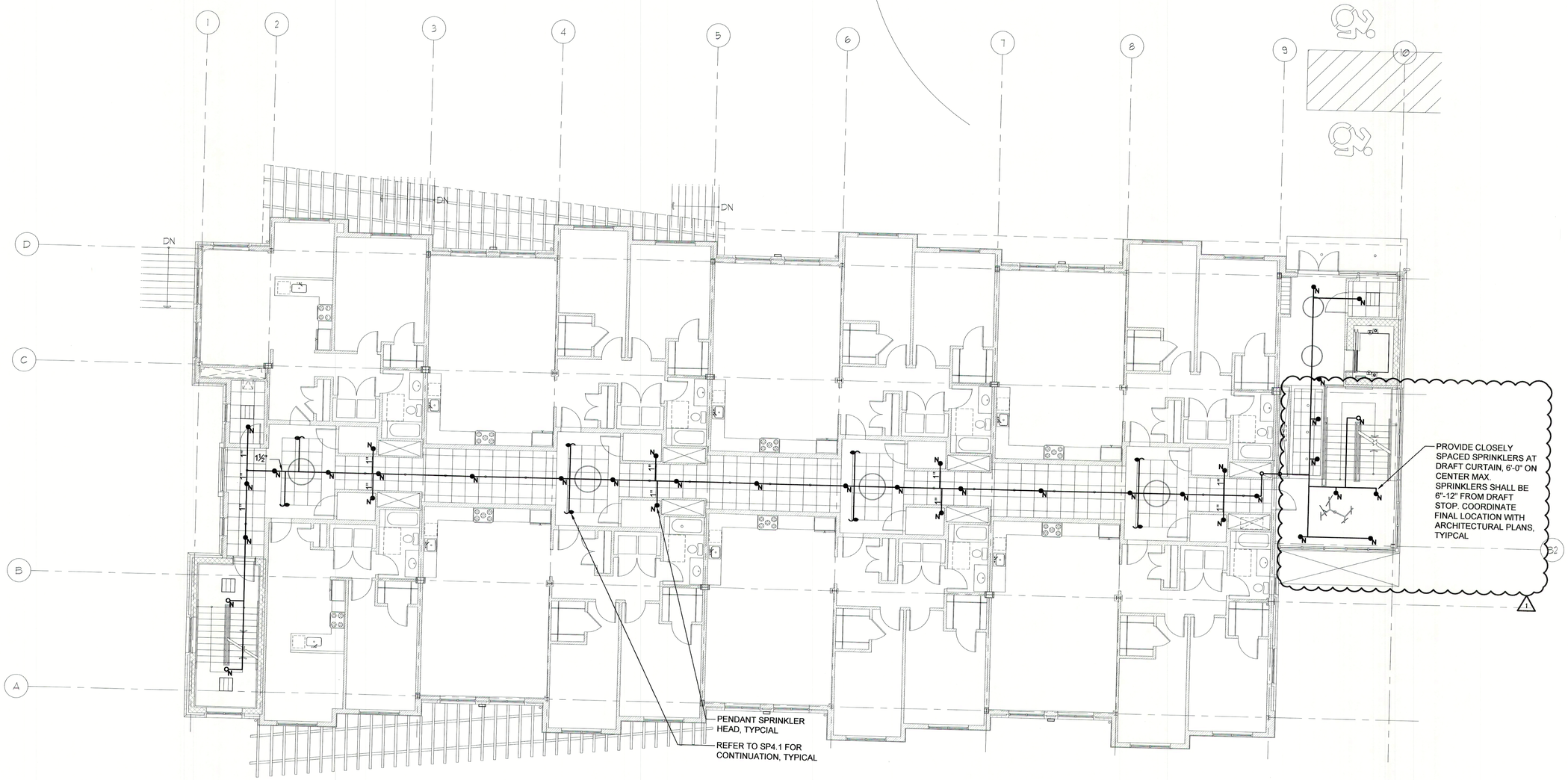

NORTH

1 SPRINKLER SECOND FLOOR PLAN
SCALE: 1/8" = 1'-0"

LIBERTY PLAZA SUITES

500 COMMERCE STREET
HAWTHORNE, NY 10532

ARCHITECT

dimovski architecture pllc
59 Kensico Road, Thornwood, NY 10594
(914) 747-3500 | (914) 747-3588 fax
www.dimovskiarchitecture.com

STRUCTURAL ENGINEER

CHARLES A. MANGANARO CONSULTING ENGINEERS
A PROFESSIONAL CORPORATION
303 SOUTH BROADWAY, SUITE 223, TARRYTOWN, NY 10591-5488
SHAILESH R. NAIK, P.E.
NEW YORK LICENSE No. 072797-1

MEP ENGINEER

OLA Consulting Engineers
50 Broadway,
Hawthorne, NY 10532
914.747.2800
8 West 38th Street,
Suite 601
New York, NY 10018
646.849.4110
olaca.com

NO.	REVISION/ISSUE	DATE
1.	ISSUED FOR PROGRESS	02-19-2021
2	ISSUED FOR PROGRESS 90%	03-05-2021
3	ISSUED FOR PERMIT	03-12-2021
4	ISSUED FOR PRICING	03-16-2021
1	DOB COMMENTS	04-26-2021

SEAL

STATE OF NEW YORK · JOHN TORRE · LICENSED PROFESSIONAL ENGINEER · 071678

PROJECT

LIBERTY PLAZA SUITES
500 COMMERCE ST.
TOWN OF MT. PLEASANT, NY

DATE:	AUGUST 12, 2020
PROJECT NO:	NDIM0001.00
DRAWN BY:	HLD
CHECKED BY:	RJ
SCALE:	AS NOTED

DRAWING TITLE

SPRINKLER SECOND FLOOR NEW WORK PLAN

SHEET NO.

SP2.2

PIPE SIZING SCHEDULE		
SIZE	LIGHT HAZARD QTY SPRINKLERS	ORDINARY HAZARD QTY SPRINKLERS
1"	2	2
1¼"	3	3
1½"	5	5
2"	10	10
2½"	30	20
3"	60	40
3½"	100	65
4"	SEE NOTE 3	100

NOTES:
1. IN ACCORDANCE WITH NFPA 13 - 2019 EDITION - TABLES 27.5.2.2.1 & 27.5.3.4
2. ALL PIPING BASED ON SCHEDULE 40 BLACK STEEL.
3. AREAS REQUIRING MORE SPRINKLERS THAN SPECIFIED FOR 3½" SHALL BE SUPPLIED BY MAINS OR RISERS SIZED FOR ORDINARY HAZARD OCCUPANCIES.

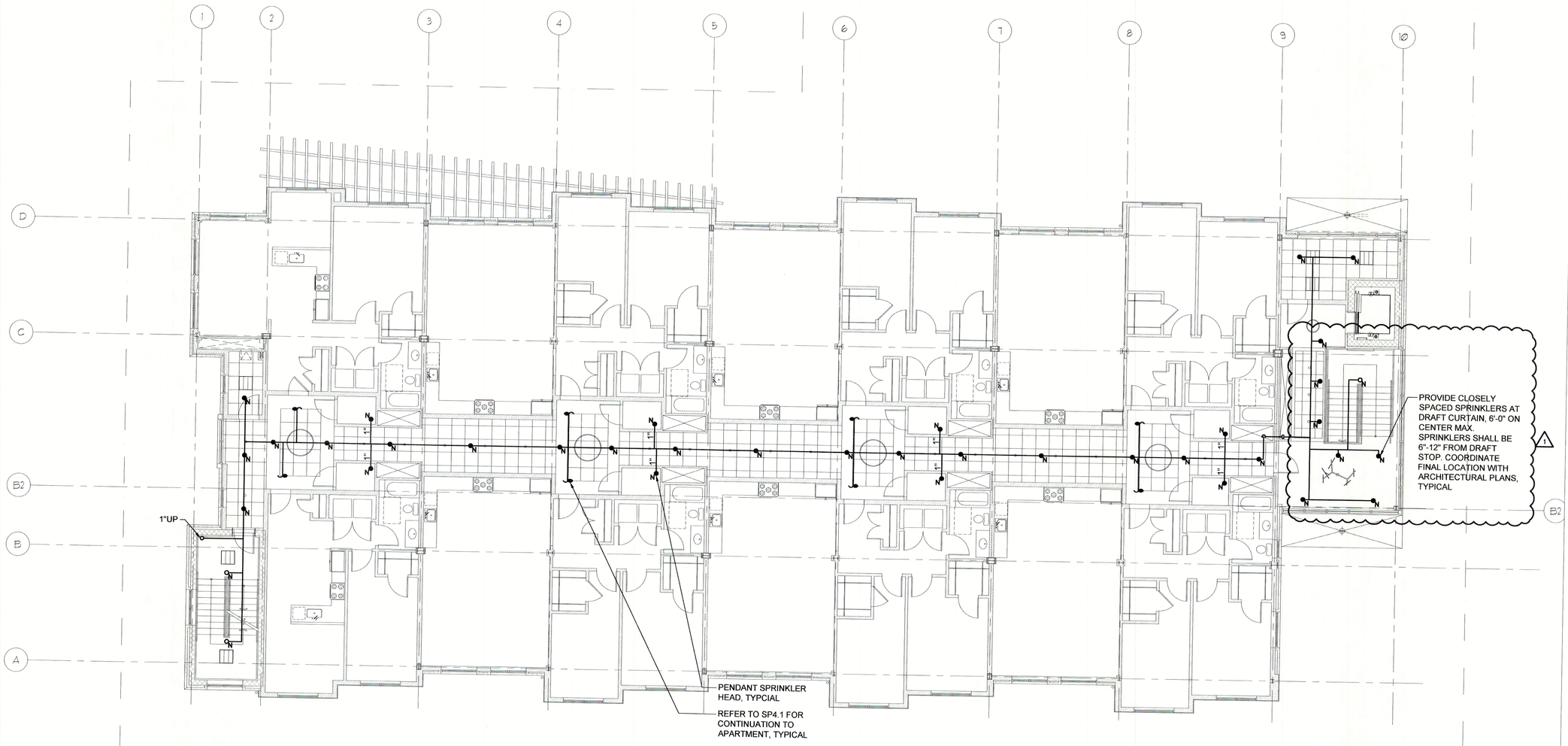

NORTH

1 SPRINKLER THIRD FLOOR PLAN
SCALE: 1/8" = 1'-0"

LIBERTY PLAZA SUITES

500 COMMERCE STREET
HAWTHORNE, NY 10532

ARCHITECT

dimovski architecture P.L.L.C.
59 Kensico Road, Thornwood, NY 10594
(914) 747-3500 | (914) 747-3588 fax
www.dimovskiarchitecture.com

STRUCTURAL ENGINEER

CHARLES A. MANGANARO CONSULTING ENGINEERS
A PROFESSIONAL CORPORATION
303 SOUTH BROADWAY, SUITE 223, TARRYTOWN, NY 10591-5488

SHAILESH R. NAIK, P.E.
NEW YORK LICENSE No. 072797-1

MEP ENGINEER

OLA Consulting Engineers
60 Broadway,
Hawthorne, NY 10532
914.747.2900

8 West 38th Street,
Suite 501
New York, NY 10018
646.849.4110

olace.com

NO.	REVISION/ISSUE	DATE
1	DOB COMMENTS	04-26-2021
4	ISSUED FOR PRICING	03-16-2021
3	ISSUED FOR PERMIT	03-12-2021
2	ISSUED FOR PROGRESS 90%	03-05-2021
1.	ISSUED FOR PROGRESS	02-19-2021

SEAL

STATE OF NEW YORK · JOHN TORRE · 071678 · LICENSED PROFESSIONAL ENGINEER

PROJECT

LIBERTY PLAZA SUITES
500 COMMERCE ST.
TOWN OF MT. PLEASANT, NY

DATE:	AUGUST 12, 2020
PROJECT NO:	NDIM0001.00
DRAWN BY:	HLD
CHECKED BY:	RJ
SCALE:	AS NOTED

DRAWING TITLE

SPRINKLER THIRD FLOOR NEW WORK PLAN

SHEET NO.

SP2.3

PIPE SIZING SCHEDULE		
SIZE	LIGHT HAZARD QTY SPRINKLERS	ORDINARY HAZARD QTY SPRINKLERS
1"	2	2
1¼"	3	3
1½"	5	5
2"	10	10
2½"	30	20
3"	60	40
3½"	100	65
4"	SEE NOTE 3	100

NOTES:
1. IN ACCORDANCE WITH NFPA 13 - 2019 EDITION - TABLES 27.5.2.2.1 & 27.5.3.4
2. ALL PIPING BASED ON SCHEDULE 40 BLACK STEEL.
3. AREAS REQUIRING MORE SPRINKLERS THAN SPECIFIED FOR 3½" SHALL BE SUPPLIED BY MAINS OR RISERS SIZED FOR ORDINARY HAZARD OCCUPANCIES.

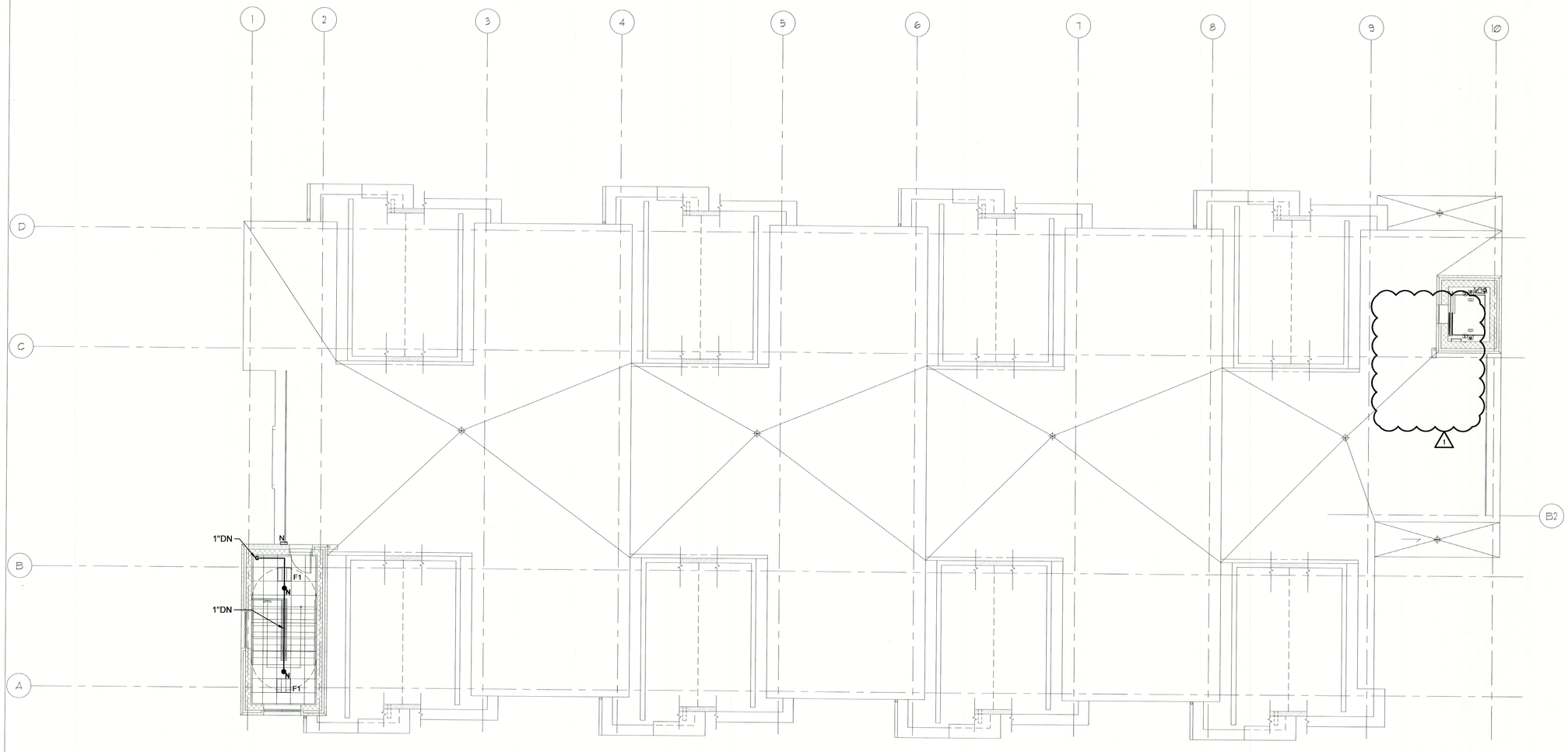

NORTH

1 SPRINKLER FOURTH FLOOR PLAN
SCALE: 1/8" = 1'-0"

LIBERTY PLAZA SUITES

500 COMMERCE STREET
HAWTHORNE, NY 10532

ARCHITECT

dimovski architecture p.c.
59 Kensico Road, Thornwood, NY 10594
(914) 747-3500 | (914) 747-3588 fax
www.dimovskiarchitecture.com

STRUCTURAL ENGINEER

CHARLES A. MANGANARO
CONSULTING ENGINEERS
A PROFESSIONAL CORPORATION
303 SOUTH BROADWAY, SUITE 223, TARRYTOWN, NY 10591-5488

SHAILESH R. NAIK, P.E.
NEW YORK LICENSE No. 072797-1

MEP ENGINEER

OLA Consulting Engineers
60 Broadway,
Hawthorne, NY 10532
914.747.2600

9 West 38th Street,
Suite 601,
New York, NY 10018
646.849.4110

olace.com

NO.	REVISION/ISSUE	DATE
1	DOB COMMENTS	04-26-2021
4	ISSUED FOR PRICING	03-16-2021
3	ISSUED FOR PERMIT	03-12-2021
2	ISSUED FOR PROGRESS 90%	03-05-2021
1.	ISSUED FOR PROGRESS	02-19-2021

SEAL

STATE OF NEW YORK
JOHN TOMIE
071678
LICENSED PROFESSIONAL ENGINEER

PROJECT

LIBERTY PLAZA SUITES
500 COMMERCE ST.
TOWN OF MT. PLEASANT, NY

DATE:	AUGUST 12, 2020
PROJECT NO:	NDIM0001.00
DRAWN BY:	HLD
CHECKED BY:	RJ
SCALE:	AS NOTED

DRAWING TITLE

SPRINKLER FOURTH LEVEL ROOF PLAN

SHEET NO.

SP2.4

PIPE SIZING SCHEDULE		
SIZE	LIGHT HAZARD QTY SPRINKLERS	ORDINARY HAZARD QTY SPRINKLERS
1"	2	2
1¼"	3	3
1½"	5	5
2"	10	10
2½"	30	20
3"	60	40
3½"	100	65
4"	SEE NOTE 3	100

NOTES:
1. IN ACCORDANCE WITH NFPA 13 - 2019 EDITION - TABLES 27.5.2.2.1 & 27.5.3.4
2. ALL PIPING BASED ON SCHEDULE 40 BLACK STEEL.
3. AREAS REQUIRING MORE SPRINKLERS THAN SPECIFIED FOR 3½" SHALL BE SUPPLIED BY MAINS OR RISERS SIZED FOR ORDINARY HAZARD OCCUPANCIES.

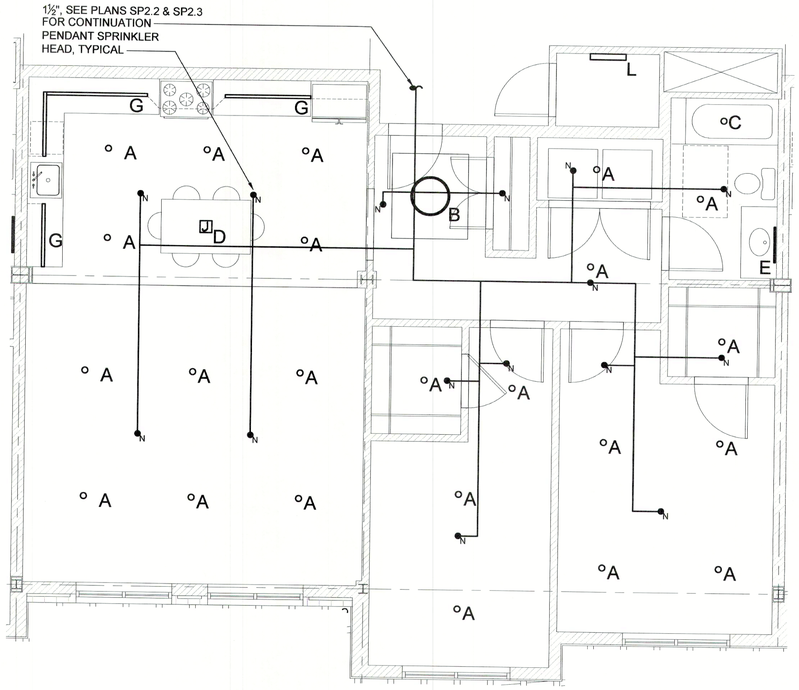

3 TYPICAL TWO BEDROOM PLAN
SCALE: 1/4" = 1'-0"

NOTES:
A. PROVIDE 1½" SPRINKLER PIPING INTO EACH DWELLING UNIT.
B. RESIDENTIAL CONCEALED PENDENT SPRINKLERS SHALL BE SPACED IN ACCORDANCE WITH MANUFACTURER'S SPECIFICATIONS AND LISTING.
C. PIPING SHALL BE CONCEALED ABOVE CEILING AND ROUTED IN BETWEEN JOISTS WHEREVER POSSIBLE. ALL PENETRATIONS THROUGH STRUCTURAL MEMBERS SHALL BE COORDINATED WITH STRUCTURAL ENGINEER.
D. REFER TO PIPE SIZING SCHEDULE TABLE FOR PIPE SIZING WITHIN UNITS IN ACCORDANCE WITH LIGHT HAZARD OCCUPANCY.
E. AS PER NFPA 13-2019 SECTION D.1.1.6.1: IN BUILDINGS SPRINKLERED IN ACCORDANCE WITH NFPA 13:
   1. CLOSETS LESS THAN 12 SQ. FT. IN INDIVIDUAL DWELLING UNITS SHALL NOT BE REQUIRED TO BE SPRINKLERED.
   2. CLOSETS THAT CONTAIN EQUIPMENT SUCH AS WASHERS, DRYERS, FURNACES, OR WATER HEATERS SHALL BE SPRINKLERED REGARDLESS OF SIZE.

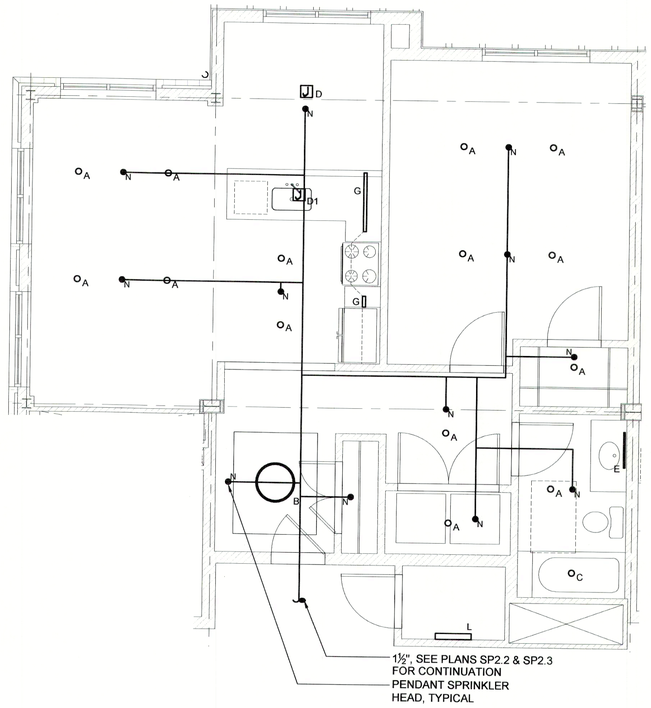

2 TYPICAL TYPE B ONE BEDROOM PLAN
SCALE: 1/4" = 1'-0"

NOTES:
A. PROVIDE 1½" SPRINKLER PIPING INTO EACH DWELLING UNIT.
B. RESIDENTIAL CONCEALED PENDENT SPRINKLERS SHALL BE SPACED IN ACCORDANCE WITH MANUFACTURER'S SPECIFICATIONS AND LISTING.
C. PIPING SHALL BE CONCEALED ABOVE CEILING AND ROUTED IN BETWEEN JOISTS WHEREVER POSSIBLE. ALL PENETRATIONS THROUGH STRUCTURAL MEMBERS SHALL BE COORDINATED WITH STRUCTURAL ENGINEER.
D. REFER TO PIPE SIZING SCHEDULE TABLE FOR PIPE SIZING WITHIN UNITS IN ACCORDANCE WITH LIGHT HAZARD OCCUPANCY.
E. AS PER NFPA 13-2019 SECTION D.1.1.6.1: IN BUILDINGS SPRINKLERED IN ACCORDANCE WITH NFPA 13:
   1. CLOSETS LESS THAN 12 SQ. FT. IN INDIVIDUAL DWELLING UNITS SHALL NOT BE REQUIRED TO BE SPRINKLERED.
   2. CLOSETS THAT CONTAIN EQUIPMENT SUCH AS WASHERS, DRYERS, FURNACES, OR WATER HEATERS SHALL BE SPRINKLERED REGARDLESS OF SIZE.

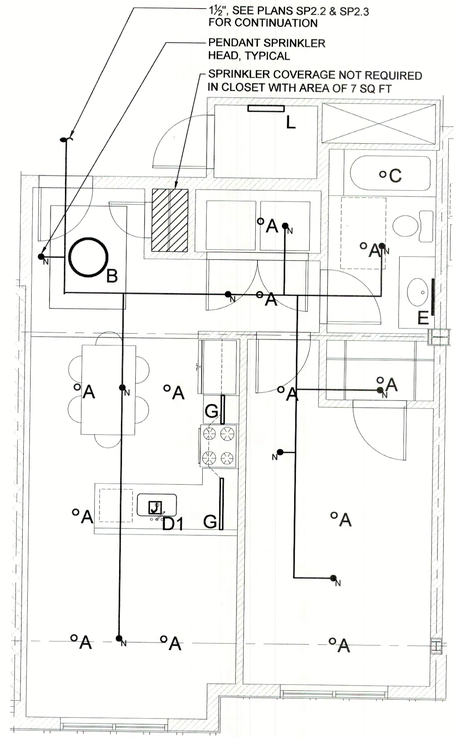

1 TYPICAL TYPE A ONE BEDROOM PLAN
SCALE: 1/4" = 1'-0"

NOTES:
A. PROVIDE 1½" SPRINKLER PIPING INTO EACH DWELLING UNIT.
B. RESIDENTIAL CONCEALED PENDENT SPRINKLERS SHALL BE SPACED IN ACCORDANCE WITH MANUFACTURER'S SPECIFICATIONS AND LISTING.
C. PIPING SHALL BE CONCEALED ABOVE CEILING AND ROUTED IN BETWEEN JOISTS WHEREVER POSSIBLE. ALL PENETRATIONS THROUGH STRUCTURAL MEMBERS SHALL BE COORDINATED WITH STRUCTURAL ENGINEER.
D. REFER TO PIPE SIZING SCHEDULE TABLE FOR PIPE SIZING WITHIN UNITS IN ACCORDANCE WITH LIGHT HAZARD OCCUPANCY.
E. AS PER NFPA 13-2019 SECTION D.1.1.6.1: IN BUILDINGS SPRINKLERED IN ACCORDANCE WITH NFPA 13:
   1. CLOSETS LESS THAN 12 SQ. FT. IN INDIVIDUAL DWELLING UNITS SHALL NOT BE REQUIRED TO BE SPRINKLERED.
   2. CLOSETS THAT CONTAIN EQUIPMENT SUCH AS WASHERS, DRYERS, FURNACES, OR WATER HEATERS SHALL BE SPRINKLERED REGARDLESS OF SIZE.

LIBERTY PLAZA SUITES

500 COMMERCE STREET
HAWTHORNE, NY 10532

ARCHITECT
dimovski architecture p.c.
59 Kensico Road, Thornwood, NY 10594
(914) 747-3500 | (914) 747-3588 fax
www.dimovskiarchitecture.com

STRUCTURAL ENGINEER
CHARLES A. MANGANARO CONSULTING ENGINEERS
A PROFESSIONAL CORPORATION
303 SOUTH BROADWAY, SUITE 223, TARRYTOWN, NY 10591-5488
SHAILESH R. NAIK, P.E.
NEW YORK LICENSE No. 072797-1

MEP ENGINEER
OLA Consulting Engineers
90 Broadway,
Hawthorne, NY 10532
914.747.2800
6 West 38th Street,
Suite 501
New York, NY 10018
646.848.4110
ola-ce.com

NO.	REVISION/ISSUE	DATE
3	ISSUED FOR PERMIT	03-12-2021
2	ISSUED FOR PROGRESS 90%	03-05-2021
1.	ISSUED FOR PROGRESS	02-19-2021

SEAL
STATE OF NEW YORK * JOHN TORRE * LICENSED PROFESSIONAL ENGINEER 071678

PROJECT
LIBERTY PLAZA SUITES
500 COMMERCE ST.
TOWN OF MT. PLEASANT, NY

DATE:	AUGUST 12, 2020
PROJECT NO:	NDIM0001.00
DRAWN BY:	CT
CHECKED BY:	KS/DS
SCALE:	AS NOTED

DRAWING TITLE
SPRINKLER TYPICAL APARTMENT TYPE PLANS

SHEET NO.
SP4.1

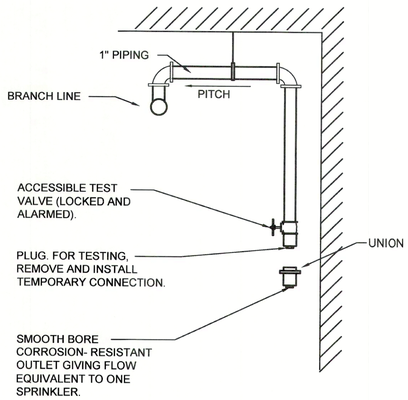

NOTE:
PROVIDE A NIPPLE-UP OFF OF BRANCH LINE TO MINIMIZE CONDENSATION IN TEST DROP.

4 DRY SYSTEM INSPECTOR'S TEST
SCALE: NONE

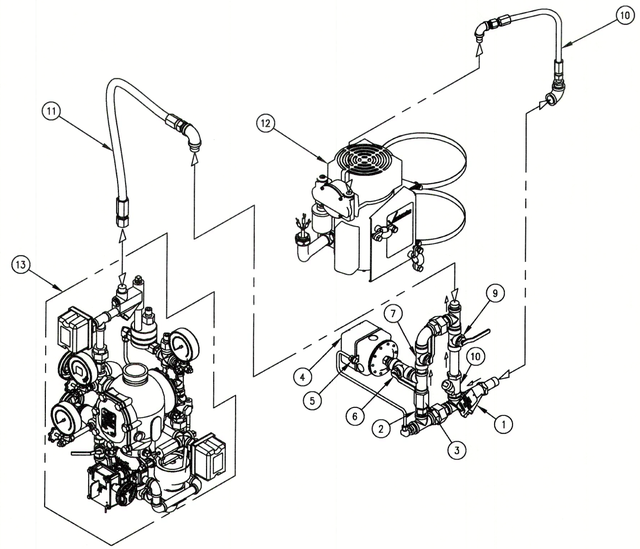

2 DRY SYSTEM - AIR MAINTENANCE ASSEMBLY SERIES 7C7
SCALE: NONE

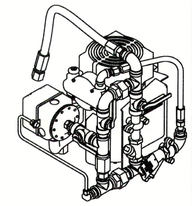

SERIES 7C7 AIR MAINTENANCE COMPRESSOR ASSEMBLY

PRODUCT LEGEND	
1	STRAINER (¾-INCH NPT)
2	SPRING-LOADED, SOFT-SEATED CHECK VALVE
3	RESTRICTOR (½-INCH NPT)(1/8 RESTRICTOR)
4	PRESSURE SWITCH
5	UNLOADER VALVE
6	PRESSURE SWITCH ISOLATION BALL VALVE (NORMALLY OPEN-LOCKABLE)
7	SLOW-FILL BALL VALVE (NORMALLY OPEN)
8	SWING CHECK (½-INCH NPT)
9	FAST FILL BALL VALVE (NORMALLY CLOSED)
10	STAINLESS STEEL BRAIDED FLEX HOSE (¼-INCH NPT MALE X FEMALE)
11	STAINLESS STEEL BRAIDED FLEX HOSE (½-INCH NPT MALE X FEMALE)
12	AIR COMPRESSOR
13	FIRELOCK NXT DEVICE
SEE VICTAULIC SUBMITTAL NUMBER 30.22	

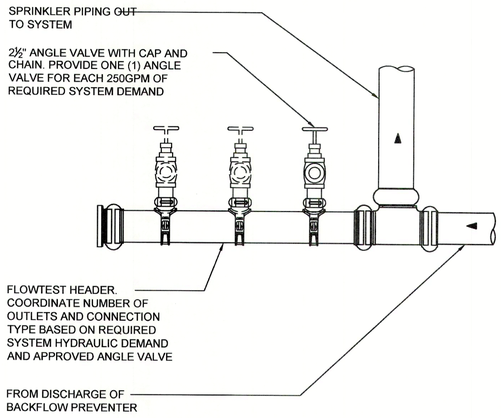

NOTE:
1) NOT REQUIRED WHERE FULL FORWARD FLOW TEST MAY BE ACCOMPLISHED THROUGH STANDPIPE SYSTEM.
2) FLOW TEST HEADER SHALL BE 4" MINIMUM SIZE FOR UP TO TWO (2) ANGLE VALVES. MINIMUM 6" FOR THREE (3) - FOUR (4) VALVES.
3) ANGLE VALVES SHALL BE LISTED FOR FIRE PROTECTION USE AND MAY BE GROOVED OR THREADED INLET.
4) TEST HEADER SHALL BE SUPPORTED AND BRACED.

3 BACKFLOW PREVENTER SPRINKLER SYSTEM FORWARD FLOW TEST ASSEMBLY
SCALE: NONE

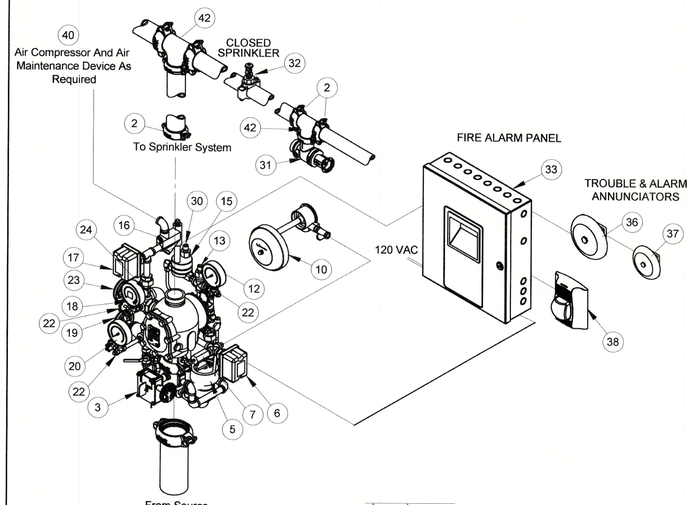

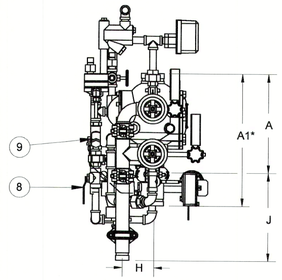

SIDE VIEW

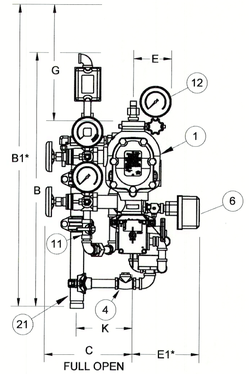

FULL OPEN
FRONT VIEW

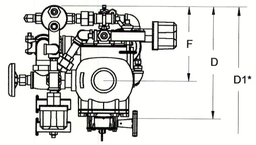

PLAN VIEW

NOTES:
1. EQUIPMENT BASED ON VICTAULIC.
2. * OPTIONAL EQUIPMENT.

1 DRY VALVE ASSEMBLY - VICTAULIC FIRELOCK NXT
SCALE: NONE

PRODUCT LEGEND	
1	Series 768 Firelock NXT Dry Valve (see Submittal 30.80) With Optional Vic Quick Riser
2	FireLock Rigid Couplings 005, 009, 009V
3	Series 705 Butterfly Valve (Optional)
4	Drain Swing Check Valve
5	Drip Cup
6	System Sensor EPS10-2 Alarm Pressure Switch
7	Series 729 Drip Check Valve
8	Diaphragm-Charge-Line Ball Valve (Normally Open)
9	3-in-1 Strainer/Check/Restrictor Assembly
10	Series 760 Water Motor Alarm (Optional)
11	Alarm Test Ball Valve
12	Diaphragm-Charge-Line Pressure Gauge (0-300psi/0-2068kPa)
13	Series 749 Auto Drain
14	Series 746-LPA Dry Accelerator Assembly (Optional)(Not Shown)
15	Series 776 Low-Pressure Actuator
16	Air Manifold
17	EPS-45-2V Supervisory Switch (Optional)
18	System Pressure Gauge (0-80 psi/0-552kPa with Retard)
19	Water Supply Main Drain Valve - Flow Test
20	Water Supply Pressure Gauge (0-300psi/0-2068kPa)
21	Drain Connection Kit (Optional)
22	Gauge Valve
23	System Main Drain Valve
24	Series 748 Ball Check Valve
25	n/a
26	Air Feed Valve Assembly (Not Shown)
27	System Air Line Strainer (Not Shown)
28	n/a
29	n/a
30	Auto Vent for 776 Low Pressure Actuator
31	Series 720 Testmaster
32	Upright Sprinkler - Victaulic Model V2703/V2704
33	System Sensor PDRP 2001 Control Panel
34	n/a
35	n/a
36	8" Supervisory Bell: System Sensor SSM24-8, 24VDC, Polarized
37	6" Trouble Bell: System Sensor SS24-6, 24VDC, Polarized
38	Horn/Strobe: (Waterflow) System Sensor P1224MC (RED), 24VDC, Polarized
39	n/a
40	Air Maintenance Device Victaulic 757/757P with pressure switch
41	(Optional Series 75D Water Column Drain Kit) not shown
42	Firelock Tee 002
SEE VICTAULIC PUBLICATION 10.01 FOR DETAILS OF APPROVALS	
UL/FM APPROVED NYC MEA-248-98-E Volume 3	

LIBERTY PLAZA SUITES

500 COMMERCE STREET
HAWTHORNE, NY 10532

ARCHITECT
dimovski architecture p.c.
59 Kensico Road, Thornwood, NY 10594
(914) 747-3500 | (914) 747-3588 fax
www.dimovskiarchitecture.com

STRUCTURAL ENGINEER
CHARLES A. MANGANARO
CONSULTING ENGINEERS
A PROFESSIONAL CORPORATION
303 SOUTH BROADWAY, SUITE 223, TARRYTOWN, NY 10591-5488
SHAILESH R. NAIK, P.E.
NEW YORK LICENSE No. 072797-1

MEP ENGINEER
OLA Consulting Engineers
90 Broadway,
Hawthorne, NY 10532
914.747.2800
8 West 38th Street,
Suite 501
New York, NY 10018
646.849.4150
olace.com

NO.	REVISION/ISSUE	DATE
3	ISSUED FOR PERMIT	03-12-2021
2	ISSUED FOR PROGRESS 90%	03-05-2021
1.	ISSUED FOR PROGRESS	02-19-2021

SEAL
STATE OF NEW YORK · JOHN TORRE · LICENSED PROFESSIONAL ENGINEER · 071678

PROJECT
LIBERTY PLAZA SUITES
500 COMMERCE ST.
TOWN OF MT. PLEASANT, NY

DATE:	AUGUST 12, 2020
PROJECT NO:	NDIM0001.00
DRAWN BY:	HLD
CHECKED BY:	RJ
SCALE:	AS NOTED

DRAWING TITLE
SPRINKLER DETAILS
1 OF 3

SHEET NO.
SP7.1

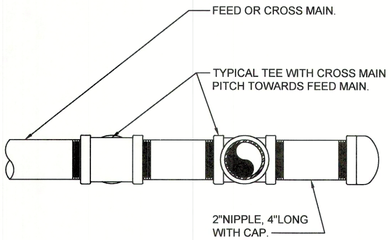

7 TYPICAL FLUSHING CONNECTION
SCALE: NONE

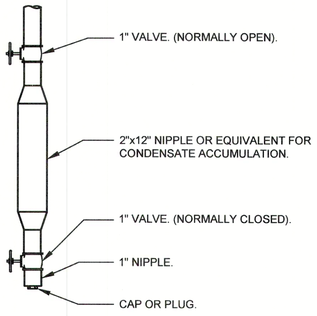

6 DRY SYSTEM LOW POINT DRAIN
SCALE: NONE

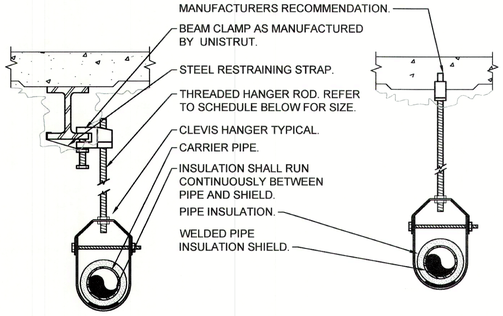

PIPE HANGER SCHEDULE					
PIPE DIA.	3/4"-2"	2 1/2"-3"	4"-5"	6"	8"-12"
HANGER DIA.	3/8"	1/2"	5/8"	3/4"	7/8"

NOTES:
1.) CLEVIS HANGERS WITH WELDED INSULATION SHIELDS SIMILAR TO RAUCH FIG. 100SH ON ALL PIPES LARGER THAN 1".
2.) FOR PIPES 1" OR SMALLER, A BAND HANGER WITH INSULATION SHIELD MAY BE USED SIMILAR TO RAUCH FIG. NO. 1ASH.
3.) FOR NON-INSULATED PIPE, INSULATION SHIELDS MAY BE OMITTED.
4.) ALL PIPE HANGERS SHALL BE GALVANIZED STEEL OR FACTORY PAINTED BLACK WITH ENAMEL.
5.) FOR NON FERROUS PIPING WITHOUT INSULATION, ALL HANGERS SHALL BE COPPER PLATED OR FURNISHED WITH A DI-ELECTRIC BETWEEN PIPE AND HANGERS.
6.) WHERE EXISTING BUILDING STRUCTURAL COMPONENTS HAVE FIREPROOF MATERIAL, ANY AREA THAT IS DISTURBED OR DAMAGED AS A RESULT OF HANGER INSTALLATION SHALL BE PATCHED WITH UL AND FM APPROVED FIREPROOFING TO MATCH EXISTING.
7.) ALL ANCHORS AND INSERTS SHALL HAVE NEW YORK CITY BOARD OF STANDARD AND APPEALS, (BSA) APPROVAL.

5 PIPE HANGER DETAIL
SCALE: NONE

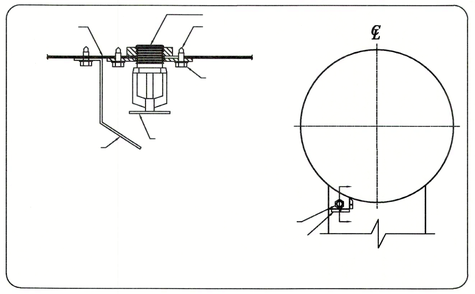

4 TRASH CHUTE SPRINKLER DETAIL
SCALE: NONE

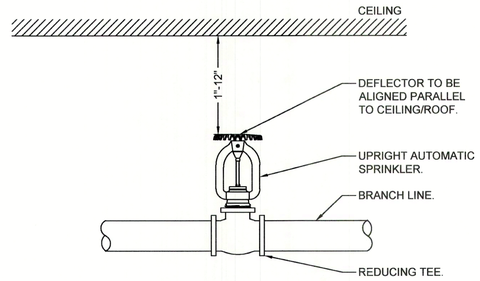

3 TYPICAL UPRIGHT SPRINKLER
SCALE: NONE

SPRINKLER HEAD SCHEDULE									
SYM.	TYPE	LOCATION	FINISH	MANUF.	MODEL	HEAD TEMP.	MAX CLG. TEMP	ORIFICE	K-FACTOR
⊗	CONCEALED	FINISHED AREAS PER PLANS	COVER PLATE COLOR PER ARCHITECT	RELIABLE	G5-56	165°F	100°F	1/2"	5.6
○	UPRIGHT	EXPOSED AREAS PER PLANS	CHROME PLATED	RELIABLE	F1FR	165°F	100°F	1/2"	5.6
○	UPRIGHT	MECHANICAL ROOMS	NATURAL BRONZE	RELIABLE	GFR	212°F	150°F	1/2"	5.6
RESIDENTIAL SPRINKLER HEADS WITHIN DWELLING UNITS									
⊗	CONCEALED	FINISHED AREAS PER PLANS	COVER PLATE COLOR PER ARCHITECT	RELIABLE	RC-43/49	165°F	100°F	3/8" 7/16"	4.3/4.9

NOTES:
1. SPRINKLER HEADS SHALL BE INSTALLED AS PER MANUFACTURER'S RECOMMENDATIONS
2. PROVIDE METAL WIRE GUARDS WHERE SPRINKLERS ARE SUBJECT TO DAMAGE, SUCH AS SPRINKLER HEADS LOCATED UNDER MECHANICAL DUCTS IN MECHANICAL EQUIPMENT ROOMS WHEN LOCATED LOWER THAN 7'-0" AFF AND HEADS IN TRASH CHUTE.
3. ALL SPRINKLER HEADS THROUGHOUT THE PROJECT AREA SHALL BE OF THE ORDINARY TEMPERATURE RATING EXCEPT AS FOLLOWS:
   A. SPRINKLER HEADS LOCATED CLOSE TO HEATERS, HOT WATER PIPING OR LOW-PRESSURE BLOW-OFF VALVE SHALL BE OF THE TEMPERATURE RATING AS REQUIRED BY NFPA-13.
   B. ALL HEAT GENERATING EQUIPMENT WHICH CAN AFFECT THE TEMPERATURE RATING OF THE SPRINKLER HEADS SHALL BE CLEARLY IDENTIFIED ON THE SHOP DRAWINGS PRIOR TO SUBMISSION FOR APPROVAL.

2 SPRINKLER HEAD SCHEDULE
SCALE: NONE

PRODUCT LEGEND	
1	DRAIN RISER
2	RISER
3	VIC MECHANICAL TEE STYLE 920N
4	VIC THREADED REDUCER No. 52
5	VIC FIRELOCK BALL VALVE SERIES 728 WITH TAMPER SWITCH
6	CHECK VALVE
7	VIC FIRELOCK ZONE CONTROL RISER MODULE SERIES 747MP
8	VIC FIRELOCK 90 DEG ELBOW No. 001
9	VIC IR FIRELOCK 90 DEG ELBOW No. 101
10	VIC FIRELOCK EZ RIGID COUPLING STYLE 009 (OR) RIGID COUPLING STYLE 005
11	TO SPRINKLER SYSTEM
12	UL LISTED FM APPROVED FLOW SWITCH (SYSTEM SENSOR MODEL WFDT)
13	PRESSURE GAUGE
14	ISOLATION VALVE FOR GAUGE
15	PRESSURE RELIEF VALVE
16	SHUT OFF VALVE (HANDLE ON BOTH SIDES)
17	SITE GLASS (VISIBLE FROM BOTH SIDES)
18	TEST AND DRAIN VALVE (HANDLE ON BOTH SIDES)
19	THREADED DRAIN CONNECTION
SEE VICTAULIC SUBMITTAL NUMBER 10.96	

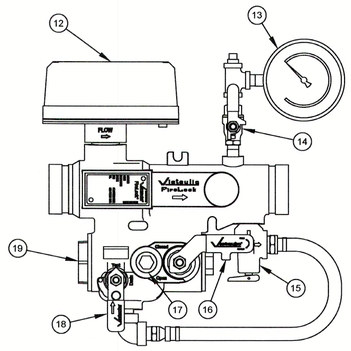

ZONE CONTROL RISER VALVE ASSEMBLY WITH ISOLATION VALVE & PSI RELIEF

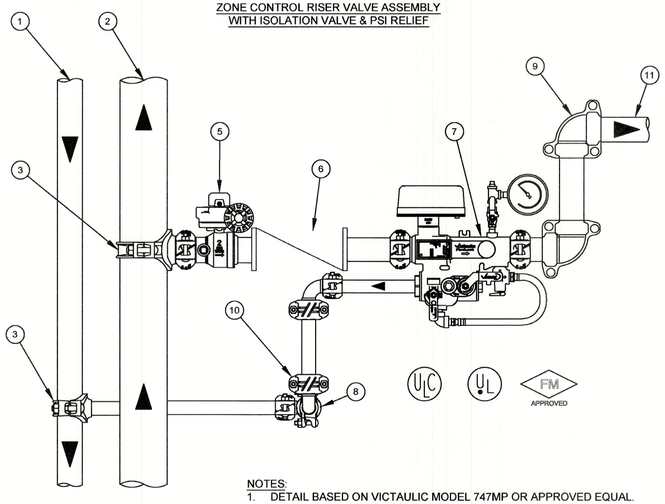

NOTES:
1. DETAIL BASED ON VICTAULIC MODEL 747MP OR APPROVED EQUAL.
2. REFER TO VICTAULIC SUBMITTAL 10.96 FOR ADDITIONAL DETAILS.
3. FIRELOCK ZONE CONTROL RISER MODULE W/ PSI RELIEF CAN BE MOUNTED IN THE HORIZONTAL OR VERTICAL UPFLOW POSITION

1 SPRINKLER ZONE CONTROL RISER MODULE WITH PSI RELIEF
SCALE: NONE

LIBERTY PLAZA SUITES

500 COMMERCE STREET
HAWTHORNE, NY 10532

ARCHITECT
dimovski architecture p.c.
59 Kensico Road, Thornwood, NY 10594
(914) 747-3500 | (914) 747-3588 fax
www.dimovskiarchitecture.com

STRUCTURAL ENGINEER
CHARLES A. MANGANARO CONSULTING ENGINEERS
A PROFESSIONAL CORPORATION
303 SOUTH BROADWAY, SUITE 223, TARRYTOWN, NY 10591-5488
SHAILESH R. NAIK, P.E.
NEW YORK LICENSE No. 072797-1

MEP ENGINEER
OLA Consulting Engineers
60 Broadway, Hawthorne, NY 10532 914.747.2800
8 West 38th Street, Suite 501 New York, NY 10018 646.849.4110
olace.com

NO.	REVISION/ISSUE	DATE
3	ISSUED FOR PERMIT	03-12-2021
2	ISSUED FOR PROGRESS 90%	03-05-2021
1.	ISSUED FOR PROGRESS	02-19-2021

SEAL
STATE OF NEW YORK · JOHN TORRE · LICENSED PROFESSIONAL ENGINEER · 071678

PROJECT
LIBERTY PLAZA SUITES
500 COMMERCE ST.
TOWN OF MT. PLEASANT, NY

DATE:	AUGUST 12, 2020
PROJECT NO:	NDIM0001.00
DRAWN BY:	HLD
CHECKED BY:	RJ
SCALE:	AS NOTED

DRAWING TITLE
SPRINKLER DETAILS
2 OF 3

SHEET NO.
SP7.2

SPRINKLER HEAD SCHEDULE									
SYM.	TYPE	LOCATION	FINISH	MANUF.	MODEL	HEAD TEMP.	MAX CLG. TEMP	ORIFICE	K-FACTOR
⊗	CONCEALED	FINISHED AREAS PER PLANS	COVER PLATE COLOR PER ARCHITECT	RELIABLE	G5-56	165°F	100°F	1/2"	5.6
○	UPRIGHT	EXPOSED AREAS PER PLANS	CHROME PLATED	RELIABLE	F1FR	165°F	100°F	1/2"	5.6
○	UPRIGHT	MECHANICAL ROOMS	NATURAL BRONZE	RELIABLE	GFR	212°F	150°F	1/2"	5.6
RESIDENTIAL SPRINKLER HEADS WITHIN DWELLING UNITS									
⊗	CONCEALED	FINISHED AREAS PER PLANS	COVER PLATE COLOR PER ARCHITECT	RELIABLE	RC-43/49	165°F	100°F	3/8" 7/16"	4.3/4.9
SPRINKLER HEAD SCHEDULE - PARKING GARAGE LEVELS									
○	UPRIGHT - DRY	EXPOSED/PARKING AREAS PER PLANS	CHROME PLATED	RELIABLE	F3QR56	155°F	100°F	1"	5.6

NOTES:
1. SPRINKLER HEADS SHALL BE INSTALLED AS PER MANUFACTURER'S RECOMMENDATIONS
2. PROVIDE METAL WIRE GUARDS WHERE SPRINKLERS ARE SUBJECT TO DAMAGE, SUCH AS SPRINKLER HEADS LOCATED UNDER MECHANICAL DUCTS IN MECHANICAL EQUIPMENT ROOMS WHEN LOCATED LOWER THAN 7'-0" AFF AND HEADS IN TRASH CHUTE.
3. ALL SPRINKLER HEADS THROUGHOUT THE PROJECT AREA SHALL BE OF THE ORDINARY TEMPERATURE RATING EXCEPT AS FOLLOWS:
   A. SPRINKLER HEADS LOCATED CLOSE TO HEATERS, HOT WATER PIPING OR LOW-PRESSURE BLOW-OFF VALVE SHALL BE OF THE TEMPERATURE RATING AS REQUIRED BY NFPA-13.
   B. ALL HEAT GENERATING EQUIPMENT WHICH CAN AFFECT THE TEMPERATURE RATING OF THE SPRINKLER HEADS SHALL BE CLEARLY IDENTIFIED ON THE SHOP DRAWINGS PRIOR TO SUBMISSION FOR APPROVAL.

6 SPRINKLER HEAD SCHEDULE
SCALE: NONE

	MAX AREA PER HEAD	DENSITY PER 1500 SQ. FT
LIGHT HAZARD	225 SQ. FT.	0.10 GPM/SQ. FT.
ORDINARY HAZARD	130 SQ. FT.	0.16 GPM/SQ. FT.

3 SPRINKLER HEAD SPACING CRITERIA
SCALE: NONE

2 TYPICAL CONCEALED PENDENT SPRINKLER
SCALE: NONE

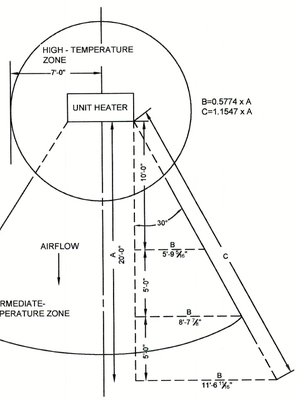

5 SPRINKLER TEMP ZONES AT UNIT HEATERS
SCALE: NONE

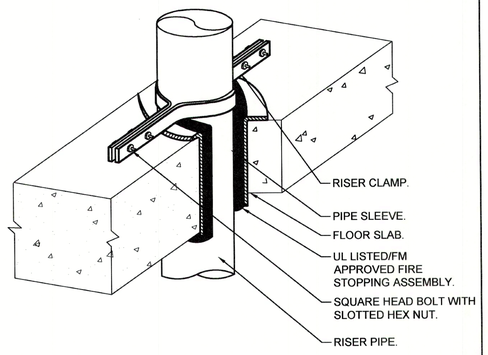

4 PIPE PENETRATION DETAIL
SCALE: NONE

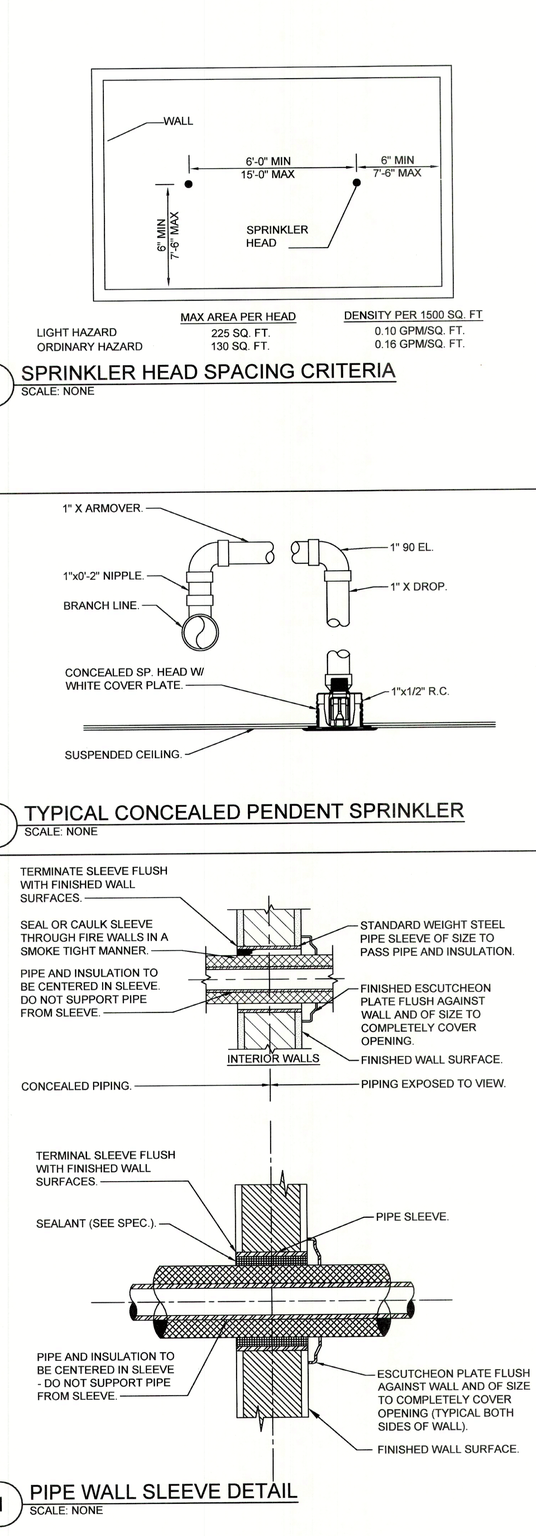

1 PIPE WALL SLEEVE DETAIL
SCALE: NONE

LIBERTY PLAZA SUITES

500 COMMERCE STREET
HAWTHORNE, NY 10532

ARCHITECT
dimovski architecture p.c.
59 Kensico Road, Thornwood, NY 10594
(914) 747-3500 | (914) 747-3588 fax
www.dimovskiarchitecture.com

STRUCTURAL ENGINEER
CHARLES A. MANGANARO CONSULTING ENGINEERS
A PROFESSIONAL CORPORATION
303 SOUTH BROADWAY, SUITE 223, TARRYTOWN, NY 10591-5488
SHAILESH R. NAIK, P.E.
NEW YORK LICENSE No. 072797-1

MEP ENGINEER
OLA Consulting Engineers
50 Broadway, Hawthorne, NY 10532 914.747.2800
8 West 38th Street, Suite 901 New York, NY 10018 646.646.4110
ola-ce.com

NO.	REVISION/ISSUE	DATE
3	ISSUED FOR PERMIT	03-12-2021
2	ISSUED FOR PROGRESS 90%	03-05-2021
1.	ISSUED FOR PROGRESS	02-19-2021

SEAL

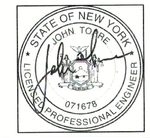

PROJECT
LIBERTY PLAZA SUITES
500 COMMERCE ST.
TOWN OF MT. PLEASANT, NY

DATE:	AUGUST 12, 2020
PROJECT NO:	NDIM0001.00
DRAWN BY:	HLD
CHECKED BY:	RJ
SCALE:	AS NOTED

DRAWING TITLE
SPRINKLER DETAILS
3 OF 3

SHEET NO.
SP7.3

PLUMBING FIXTURE SCHEDULE

TAG	SYMBOLS PLAN	SYMBOLS ELEVATION	FIXTURES	PLUMBING CONNECTIONS WASTE	VENT	COLD WATER	HOT WATER	DETAILS	REMARKS
P-1			KITCHEN SINK	2"	1-1/2"	1/2"	1/2"	SINK: KOHLER CAIRN K-28001-CM6 UNDER MOUNT KITCHEN SINK. 9-1/2" DEPTH. KOHLER NEOROC COMPOSITE. FAUCET: KOHLER CRUE K-22974-VS TOUCHLESS PULL-DOWN SINGLE HANDLE KITCHEN FAUCET. ADA COMPLIANT. 1.5 GPM MAX FLOW RATE AT 60 PSI. 120V/1Ø .15A.	
P-2			TANK TYPE WATER CLOSET FLOOR MOUNTED	4"	2"	1/2"	-	TOILET: KOHLER MODEL K-3619-0, CIMARRON COMFORT HEIGHT, ONE PIECE ELONGATED, 1.28 GPF, CHAIR HEIGHT TOILET. SEAT: REFER TO ARCHITECTURAL DRAWINGS	
P-3			SHOWER/TUB	2"	1-1/2"	3/4"	3/4"	TUB: KOHLER ENTITY K-26109-0 60"x30" ACRYLIC ALCOVE BATH. ROUND OVERFLOW WITH LOW STEP OVER HEIGHT. ADA COMPLIANT. SHOWER HEAD ASSEMBLY: KOHLER PITCH K-TS907074-4G RITE TEMP 1.75 GPM BATH AND SHOWER TRIM. PRESSURE BALANCING DIAPHRAGM. ADA COMPLIANT METAL LEVER HANDLE. 6" DIVERTER BATH SPOUT WITH SLIP-FIT CONNECTION. PROVIDE MIXING VALVE	CONFORM TO ASSE 1060/ASME A112.1016/CSA B125.16 INTEGRAL SCREWDRIVER STOPS
P-4			LAV-DEC	1-1/2"	1-1/2"	1/2"	1/2"	SINK: KOHLER MODEL K2214-0 LADENA BATHROOM SINK. FAUCET: KOHLER MODEL K-97093-4-BN	CONFORM TO NSF 184 P-11 SCHEDULED FOR CONNECTION SIZES ONLY
P-5			DISHWASHER	HOSE DRAIN	-	-	1/2"	REFER TO ARCHITECT'S DRAWINGS	
P-6			LAUNDRY MACHINE	2"	1-1/2"	3/4"	3/4"	REFER TO ARCHITECT'S DRAWINGS	
P-7			REFRIGERATOR	-	-	1/2"	-	REFER TO ARCHITECT'S DRAWINGS	
FD-1			FLOOR DRAIN	AS NOTED	2"	-	-	MAKE: WATTS MODEL: FD-100-A EPOXY COATED FLOOR DRAIN TRAP PRIMER: PROVIDE TRAP PRIMER ON ALL FLOOR DRAINS, SIMILAR TO WATTS TP300S	CONFORM TO ASME A112.3.1 OR ASME A112.6.3
RD-1			ROOF DRAIN	AS NOTED	-	-	-	WATTS RD-300 HIGH VOLUME ROOF DRAIN	
TD-1			TRENCH DRAIN	4"	-	-	-	MAKE: WATTS MODEL: DEAD LEVEL P. PRE-SLOPED POLYPROPYLENE TRENCH DRAIN SYSTEM W POLY PROPYLENE FRAME. PROVIDE CLASS C DUCTILE IRON GRATE.	
WH-1			WALL HYDRANT NON FREEZE	-	-	3/4"	-	MIFAB MHY-15 LOW LEAD NON FREEZE WALL HYDRANT	
WH-2			HOSE BIB	-	-	3/4"	-	MIFAB MHY-9000-NPB LOW LEAD, ROUGH BRONZE ANTI-CONTAMINATION WALL FAUCET	

NOTES:
1. REFER TO ARCHITECTURE DRAWINGS FOR LOCATIONS AND ELEVATIONS.
2. PROVIDE WATER HAMMER ARRESTERS FOR FIXTURES WITH QUICK CLOSING VALVES (AUTOMATIC CLOTHES WASHERS, DISHWASHING MACHINES AND WATER CLOSETS. SEE EQUIPMENT NOTES.
3. PROVIDE TRAP PRIMER FOR ALL FD-1 FLOOR DRAINS.

EXPANSION TANK SCHEDULE

DESIGNATION	ET-1
SERVICE	DWH-1
MODEL	ST-5
DIAMETER/HEIGHT (IN)	8 / 13
TANK VOLUME (GALL)	2.0
MAX. TEMP. (°F)	200
MAX. PRESS. (PSI)	150

NOTES:
1. TANKS BASED ON AMTROL.

SYMBOLS AND ABBREVIATIONS

SYMBOL	ABBREVIATION	DESCRIPTION
	AFF	ABOVE FINISHED FLOOR
	AHC	ABOVE HUNG CEILING
	BFP	BACK FLOW PREVENTOR
	-	BALL VALVE
	-	BASKET STRAINER
	-	BUTTERFLY VALVE
	-	CHECK VALVE
	-	CIRCUIT SETTER
	CODP	CLEAN OUT DECK PLATE
	CW	COLD WATER
	-	CONCENTRIC REDUCER
	DCV	DOUBLE CHECK VALVE - BFP
	-	ECCENTRIC REDUCER
	-	ELBOW DOWN
	-	ELBOW UP
	DEM.	EXISTING TO BE REMOVED
	EX.	EXISTING TO REMAIN
	-	FLEXIBLE CONNECTION
	FCO	FLOOR CLEAN OUT
	FS	FLOOR SINK
	-	FLOW ARROW
	FAI	FRESH AIR INTAKE
	-	GATE VALVE
	-	GLOBE VALVE
	HW	HOT WATER
	HW HTR	HOT WATER HEATER
	HWC	HOT WATER RECIRCULATION
	LDR	LEADER
	-	MANUAL AIR VENT
	NEW	NEW WORK
	-	OS&Y GATE VALVE
	-	PLUG VALVE
	-	PIPE CAP
	-	PRESSURE GAGE
	-	PRESSURE REDUCING VALVE
	-	PUMP
	PD	PUMP DISCHARGE
	RPZ	REDUCED PRESSURE ZONE - BFP
	REL.	REMOVE AND RELOCATE
	S	SANITARY
	-	SOLENOID VALVE
	-	STRAINER
	SD	STORM DRAINAGE
	-	TEE DOWN
	-	TEE UP
	-	THERMOMETER
	TYP.	TYPICAL
	-	T&P RELIEF VALVE
	-	UNION
	V	VENT
	VTR	VENT THROUGH ROOF
	WCO	WALL CLEAN OUT
	W	WASTE LINE
	-	2-WAY VALVE
	-	3-WAY VALVE

NOTE: FOR REFERENCE ONLY. NOT ALL SYMBOLS OR ABBREVIATIONS ARE USED IN THIS PROJECT.

GENERAL NOTES

1. THE CONTRACT DRAWINGS INDICATE THE EXTENT AND GENERAL ARRANGEMENTS OF THE PLUMBING SYSTEMS. IF ANY DEPARTURES FROM THE DRAWINGS ARE DEEMED NECESSARY BY THE PLUMBING CONTRACTOR, DETAILS OF SUCH DEPARTURES AND THE REASONS THEREFORE SHALL BE SUBMITTED TO THE OWNER AND ENGINEER FOR APPROVAL. NO SUCH DEPARTURES SHALL BE MADE WITHOUT PRIOR WRITTEN APPROVAL OF THE OWNER AND ENGINEER. EQUIPMENT AND PIPING ARRANGEMENTS SHALL PROVIDE ADEQUATE AND ACCEPTABLE CLEARANCES FOR ENTRY, SERVICING, AND MAINTENANCE. ANY CHANGES TO PIPING AND EQUIPMENT LOCATIONS NECESSARY TO AVOID INTERFERENCE WITH OTHER TRADES SHALL BE MADE AT NO EXTRA COST.
2. THE PLUMBING WORK SHALL BE PERFORMED IN STRICT ACCORDANCE WITH THE LATEST EDITION OF THE PREVAILING NEW YORK STATE PLUMBING AND BUILDING CODES. IN CASE OF CONFLICT BETWEEN THE CONTRACT DOCUMENTS AND A GOVERNING CODE OR ORDINANCE, THE MORE STRINGENT STANDARD SHALL APPLY.
3. THE PLUMBING CONTRACTOR SHALL BE RESPONSIBLE FOR OBTAINING ALL NECESSARY PERMITS AND FOR PAYING RELATED FEES.
4. CONNECTIONS TO EXISTING UTILITIES AND SERVICES ARE SHOWN ACCORDING TO THE BEST INFORMATION AVAILABLE. THE CONTRACTOR SHALL VERIFY THE EXACT LOCATIONS, INVERT ELEVATIONS, AND SIZES OF EXISTING PLUMBING SERVICES IN FIELD, AND SHALL CONNECT NEW PLUMBING SERVICES AS INDICATED ON DRAWINGS.
5. PRIOR TO FABRICATION, THIS CONTRACTOR SHALL VERIFY ALL MEASUREMENTS AND CONDITIONS ON JOB SITE, AND COORDINATE THIS WORK WITH THE WORK OF ALL OTHER TRADES.
6. ALL ACCESS PANELS SHALL BE BY GENERAL CONTRACTOR. THE PLUMBING CONTRACTOR SHALL BE RESPONSIBLE FOR THEIR LOCATION.
7. PROVIDE ALL PLUMBING FIXTURES, PIPING, VALVES AND ACCESSORY ITEMS AS SPECIFIED AND AS REQUIRED FOR A COMPLETE INSTALLATION. ROUGHING DIMENSIONS OF FIXTURES MUST BE COORDINATED WITH THE GENERAL CONTRACTOR.
8. PITCH ALL WASTE, SANITARY, AND STORM DRAIN PIPING AT MAXIMUM SLOPE POSSIBLE, BUT NOT LESS THAN 1/8" PER FOOT FOR PIPING ≥ 3" AND 1/4" PER FOOT FOR PIPING ≤ 2½".
9. NO PIPING SHALL RUN EXPOSED IN FINISHED AREAS.
10. PROVIDE DIELECTRIC FITTINGS OR COUPLINGS WHEREVER DISSIMILAR METALS ARE JOINED.
11. PROVIDE SHUTOFF VALVES AT ALL FIXTURES AND EQUIPMENT ON COLD WATER, AND HOT WATER PIPES.
12. ALL WORK SHALL BE PROPERLY TESTED, BALANCED, AND CLEANED AND DISINFECTED. PROVIDE A ONE YEAR WARRANTY FROM DATE OF FINAL INSPECTION ON ALL PARTS AND LABOR.
13. PROVIDE ALL PIPE OPENINGS THROUGH PARTITIONS WITH PIPE SLEEVES. FOR PIPES PENETRATING FIRE RATED PARTITIONS, THE SPACE BETWEEN THE PIPE AND THE SLEEVE SHALL BE SEALED WITH FIRE STOPPING MATERIAL. PENETRATIONS FOR PIPING SHALL BE MADE BY CORE DRILLING WHENEVER POSSIBLE.
14. PROVIDE TRAP SEAL PRIMERS FOR FLOOR DRAINS. INSTALL THE PRIMER VALVE IN THE COLD WATER SERVICE, WITH THE TRAP CONNECTION PIPED TO THE FLOOR DRAIN TRAP. LOCATE THE VALVE IN AN ACCESSIBLE LOCATION.
15. THE PLUMBING CONTRACTOR SHALL PROVIDE ALL CUTTING, PATCHING, CORE DRILLING, PAINTING, ACCESS PANELS, AND FINAL RESTORATION REQUIRED TO FACILITATE THE INSTALLATION OF PLUMBING PIPING, INCLUDING ABOVE CEILINGS AND IN SHAFTS THAT WILL NOT BE REPLACED OR OPENED UNDER ANY OTHER SCOPE OF WORK RELATED TO THIS PROJECT. CONTRACTOR TO REMOVE AND REPLACE CEILINGS, AND OPEN AND PATCH SHAFTS AND WALLS, AS REQUIRED TO EXECUTE THE PLUMBING WORK.
16. SEE THE ARCHITECTURAL DRAWINGS FOR EXACT PHASING AND TIME SCHEDULE FOR CONSTRUCTION.
17. ALL MOTOR STARTERS AND DISCONNECT SWITCHES FOR PLUMBING EQUIPMENT SHALL BE FURNISHED BY THE PLUMBING CONTRACTOR AND INSTALLED BY THE ELECTRICAL CONTRACTOR, UNLESS OTHERWISE NOTED. DISCONNECT SWITCHES FURNISHED BY THE PLUMBING CONTRACTOR FOR PLUMBING EQUIPMENT SHALL BE HEAVY DUTY TYPE.
18. THE CONTRACTOR SHALL BE RESPONSIBLE FOR PROVIDING TEMPORARY VENTILATION AND EXHAUST AIR WHEN WELDING OR SOLDERING OPERATIONS ARE PERFORMED, AS REQUIRED BY OSHA.

EQUIPMENT NOTES

1. DOMESTIC WATER HEATER, DWH-1: SHALL BASED ON AO SMITH COMMERCIAL GRADE PROLINE XE ELECTRONICS DISPLAY RESIDENTIAL ELECTRIC WATER HEATER MODEL NUMBER PXGT-40. FIRST HOUR RATING: 59 GALLONS. LISTED AND LABELED IN ACCORDANCE WITH UL 174, CSA CERTIFIED AND ASME RATED T&P RELIEF VALVE. WATER HEATER SHALL BE INSTALLED IN ACCORDANCE WITH MANUFACTURERS INSTRUCTIONS.
   A. CERTIFIED AT 300 PSI TEST PRESSURE AND 150 PSI WORKING PRESSURE
   B. NOMINAL CAPACITY OF 40 GALLONS.
   C. UEF: 0.93
   D. 4.5 KW, 208V,1Ø,60Hz
   E. DWH SHALL BE INSTALLED ON A 4"HIGH CONCRETE PAD
2. WATER HAMMER ARRESTERS SHALL BE SIMILAR TO JAY R SMITH 5200 SERIES, ASSE/ANSI 1010, PDI WH-20 AND LEAD FREE.
3. HEAT TRACE: BASED ON DANFOSS SELF REGULATING HEAT TRACE, SERIES PX, 2.5 WATTS PER LINEAR FOOT, 208V,3PH,60 HZ, 15 AMPS. FIELD LOCATE WITH PIPING. COORDINATE WITH ELECTRICAL CONTRACTOR FOR CIRCUITING TO PANEL. SEE PLANS FOR ASSOCIATED PANEL LOCATION. PANEL SHALL BE GFPE RATED.

LIBERTY PLAZA SUITES

500 COMMERCE STREET HAWTHORNE, NY 10532

ARCHITECT
dimovski architecture
59 Kensico Road, Thornwood, NY 10594
(914) 747-3500 | (914) 747-3588 fax
www.dimovskiarchitecture.com

STRUCTURAL ENGINEER
CHARLES A. MANGANARO CONSULTING ENGINEERS
A PROFESSIONAL CORPORATION
303 SOUTH BROADWAY, SUITE 223, TARRYTOWN, NY 10591-5488
SHAILESH R. NAIK, P.E.
NEW YORK LICENSE No. 072797-1

MEP ENGINEER
OLA Consulting Engineers
50 Broadway, Hawthorne, NY 10532
914.747.2800
8 West 38th Street, Suite 501 New York, NY 10018
646.849.4110
ola-ce.com

NO.	REVISION/ISSUE	DATE
1	DOB COMMENTS	04-26-2021
4	ISSUED FOR PRICING	03-16-2021
3	ISSUED FOR PERMIT	03-12-2021
2	ISSUED FOR PROGRESS 90%	03-05-2021
1.	ISSUED FOR PROGRESS	02-19-2021

SEAL
STATE OF NEW YORK · JOHN TOMEI · LICENSED PROFESSIONAL ENGINEER · 071678

PROJECT
LIBERTY PLAZA SUITES
500 COMMERCE ST.
TOWN OF MT. PLEASANT, NY

DATE:	AUGUST 12, 2020
PROJECT NO:	NDIM0001.00
DRAWN BY:	HLD
CHECKED BY:	RJ
SCALE:	AS NOTED

DRAWING TITLE
PLUMBING SYMBOLS ABBREVIATIONS, GENERAL NOTES AND SCHEDULES

SHEET NO.
P0.1

SPECIFICATIONS

P-1 GENERAL

A.) THE CONTRACTOR SHALL OBTAIN AND FAMILIARIZE HIMSELF WITH THE BUILDING DESIGN CRITERIA AND CONSTRUCTION REQUIREMENTS PRIOR TO SUBMITTING BID. THE PLUMBING WORK SHALL BE PERFORMED IN STRICT ACCORDANCE WITH ALL LOCAL PLUMBING AND BUILDING CODES, AS WELL AS THOSE OF THE STATE OF NEW YORK. IN CASE OF CONFLICT BETWEEN THE CONTRACT DOCUMENTS AND A GOVERNING CODE OR ORDINANCE THE MORE STRINGENT STANDARD SHALL APPLY.

B.) PRIOR TO FABRICATION THIS CONTRACTOR SHALL VERIFY ALL MEASUREMENTS AND CONDITIONS ON JOB SITE AND COORDINATE THIS WORK WITH THE WORK OF ALL OTHER TRADES.

C.) PROVIDE ALL PLANT FACILITIES, LABOR, MATERIALS, TOOLS, EQUIPMENT, APPLIANCES, TRANSPORTATION, SUPERVISION, AND RELATED WORK NECESSARY OR INCIDENTAL TO COMPLETE THE WORK SPECIFIED IN THIS SECTION AND AS SHOWN ON THE DRAWINGS.

D.) THE DRAWINGS INDICATE THE EXTENT AND GENERAL ARRANGEMENTS OF THE PLUMBING SYSTEMS. IF ANY DEPARTURES FROM THE DRAWINGS ARE DEEMED NECESSARY BY THE PLUMBING CONTRACTOR, DETAILS OF SUCH DEPARTURES AND THE REASONS THEREFORE SHALL BE SUBMITTED TO THE OWNER AND ENGINEER FOR APPROVAL. NO SUCH DEPARTURES SHALL BE MADE WITHOUT PRIOR WRITTEN APPROVAL OF THE OWNER AND ENGINEER. EQUIPMENT AND PIPING ARRANGEMENTS SHALL PROVIDE ADEQUATE AND ACCEPTABLE CLEARANCES FOR ENTRY, SERVICING, AND MAINTENANCE.

E.) CONSTRUCT ALL APPARATUS OF MATERIALS AND PRESSURE SUITABLE FOR THE CONDITIONS ENCOUNTERED DURING CONTINUOUS OPERATION.

F.) WHERE CORROSION CAN OCCUR, APPROPRIATE CORROSION-RESISTANT MATERIALS AND ASSEMBLY METHODS MUST BE USED, INCLUDING ISOLATION OF DISSIMILAR METALS AGAINST GALVANIC INTERACTION. RESISTANCE TO CORROSION SHALL BE ACHIEVED BY THE USE OF THE APPROPRIATE BASE MATERIALS COATINGS AND SHALL BE RESORTED TO ONLY WHEN SPECIFICALLY PERMITTED BY THE SPECIFICATIONS.

G.) CONSTRUCT ALL EQUIPMENT IN ACCORDANCE WITH REQUIREMENTS OF ALL APPLICABLE CODES. ALL PRESSURE VESSELS AND SAFETY DEVICES THAT FALL WITHIN THE SCOPE OF THE ASME CODE SHALL CONFORM TO THE CODE AND BEAR THE ASME LABEL OR STAMP.

H.) ALL INSTALLATIONS SHALL BE IN ACCORDANCE WITH MANUFACTURER'S RECOMMENDATIONS AND GUIDELINES.

I.) UPON COMPLETION OF WORK THE ENTIRE PLUMBING SYSTEM SHALL BE OPERATED IN THE PRESENCE OF THE OWNER AND ENGINEER TO DEMONSTRATE THAT ALL COMPONENTS ARE INSTALLED AND OPERATING PROPERLY.

P-2 WORK NOT INCLUDED

A.) THE FOLLOWING ITEMS OF WORK ARE TO BE DONE BY OTHERS AND SHALL NOT BE INCLUDED IN THE WORK OF THIS SECTION. HOWEVER, IT SHALL BE THE RESPONSIBILITY OF THIS CONTRACTOR TO SUPPLY THE OTHER CONTRACTORS WITH THE NECESSARY INFORMATION, DRAWINGS, AND SUPERVISION SO THAT THEY CAN PROPERLY COMPLETE THEIR PHASE OF THE INSTALLATION.

1.) ELECTRICAL WIRING AND MOUNTING OF STARTING AND CONTROL EQUIPMENT FOR ELECTRICALLY OPERATED PLUMBING EQUIPMENT.

2.) ALL ELECTRIC POWER WIRING EXCEPT WHERE FURNISHED AS AN INTEGRAL PART OF FACTORY ASSEMBLED EQUIPMENT OR AS OTHERWISE REQUIRED FOR AUTOMATIC CONTROLS.

B.) WORK FOR THIS CONTRACTOR SHALL BE LIMITED TO WITHIN FIVE FEET OF THE BUILDING EXTERIOR. ALL WORK TO BE PERFORMED OUTSIDE FIVE FEET OF THE BUILDING EXTERIOR SHALL BE DONE BY OTHERS UNLESS OTHERWISE NOTED.

C.) ALL EXTERIOR STORM-DRAINAGE AND GUTTERS, LEADERS, AND DOWNSPOUTS ARE BY OTHERS.

P-3 VISITING THE PREMISES

A.) THE PLUMBING CONTRACTOR, BEFORE SUBMITTING A BID ON THE WORK, MUST VISIT THE SITE AND FAMILIARIZE HIMSELF WITH ALL VISIBLE EXISTING CONDITIONS.

B.) THE SUBMISSION OF A BID WILL BE CONSIDERED AN ACKNOWLEDGMENT ON THE PART OF THE BIDDER OF HIS VISITATION TO THE SITE. THE PLUMBING CONTRACTOR SHALL BE RESPONSIBLE FOR THE INSTALLATION OF THE WORK AS SHOWN ON THE DRAWINGS AND SPECIFIED HEREIN.

C.) INSPECT AND VERIFY ALL CONDITIONS WHICH MAY AFFECT COST OF INSTALLATION. VERIFY EXACT LOCATION OF ALL EXISTING PIPES, DUCTS, BEAMS, ETC., WHETHER SHOWN ON THE DRAWINGS OR NOT, SO FAR AS THESE LOCATIONS RELATE TO THE NEW WORK. PROVIDE ANY OFFSETS IN NEW PIPING OR AS MAY BE REQUIRED FOR PROPER CLEARANCES TO AVOID EXISTING DUCTS, CABLES OR OTHER OBSTRUCTION.

P-4 QUALITY ASSURANCE

A.) THE WORK SHALL BE EXECUTED IN STRICT ACCORDANCE WITH THE N.Y. STATE PLUMBING CODES. IN CASE OF CONFLICT BETWEEN THE CONTRACT DOCUMENTS AND A GOVERNING CODE OR ORDINANCE, THE MORE STRINGENT REQUIREMENTS SHALL APPLY.

B.) UNLESS OTHERWISE SPECIFIED OR INDICATED, MATERIALS AND WORKMANSHIP SHALL CONFORM WITH THE LATEST EDITION OF THE FOLLOWING CODES AND STANDARDS: AMERICAN NATIONAL STANDARDS INSTITUTE (ANSI), UNDERWRITERS' LABORATORIES, INC. (UL)., AMERICAN SOCIETY FOR TESTING AND MATERIALS (ASTM), NATIONAL FIRE PROTECTION ASSOCIATION (NFPA), AND NATIONAL ELECTRIC CODE.

C.) IF ANY WORK IS PERFORMED AND SUBSEQUENT CHANGES ARE NECESSARY TO CONFORM TO THE ORDINANCES, THE CHANGES SHALL BE MADE AT THE PLUMBING CONTRACTOR'S EXPENSE.

P-5 WORKMANSHIP AND MATERIALS

A.) WORKMANSHIP SHALL BE OF THE BEST QUALITY AND NONE BUT COMPETENT MECHANICS SKILLED IN THEIR TRADES SHALL BE EMPLOYED. THE PLUMBING CONTRACTOR SHALL FURNISH THE SERVICES OF AN EXPERIENCED SUPERINTENDENT, WHO WILL BE CONSTANTLY IN CHARGE OF THE ERECTION OF THE WORK, UNTIL COMPLETED AND ACCEPTED.

B.) UNLESS OTHERWISE HEREINAFTER SPECIFIED, ALL MATERIALS AND EQUIPMENT UNDER THIS SECTION OF THE SPECIFICATIONS SHALL BE NEW, OF BEST GRADE, AND AS LISTED IN PRINTED CATALOGS OF THE MANUFACTURER. EACH ARTICLE OF ITS KIND SHALL BE THE STANDARD PRODUCT OF A SINGLE MANUFACTURER.

C.) THE ENGINEER SHALL HAVE THE RIGHT TO ACCEPT OR REJECT MATERIAL, EQUIPMENT, AND/OR WORKMANSHIP AND DETERMINE WHEN THE PLUMBING CONTRACTOR HAS COMPLIED WITH THE REQUIREMENTS HEREIN SPECIFIED.

D.) ALL MANUFACTURED MATERIALS SHALL BE DELIVERED AND STORED IN THEIR ORIGINAL CONTAINERS.

P-6 MANUFACTURERS' RECOMMENDATIONS

A.) EQUIPMENT INSTALLED UNDER THIS SECTION OF THE SPECIFICATIONS SHALL BE INSTALLED ACCORDING TO MANUFACTURERS' RECOMMENDATIONS, UNLESS OTHERWISE SHOWN ON THE DRAWINGS OR HEREIN SPECIFIED.

P-7 EQUIPMENT SUBMITTALS

A.) THE PLUMBING CONTRACTOR SHALL PREPARE A COMPLETE SUBMITTAL OF PLUMBING FIXTURES, PIPING, AND EQUIPMENT INCLUDED UNDER THIS SECTION.

B.) SHOP DRAWINGS: SHOP DRAWINGS SHALL INCLUDE DRAWINGS WITH DIMENSIONS OF ALL EQUIPMENT, SCHEDULES, PERFORMANCE CHARTS, INSTRUCTIONS, BROCHURES, DIAGRAMS, AND OTHER INFORMATION TO ILLUSTRATE THE REQUIREMENTS AND OPERATION OF THE SYSTEM.

P-8 INTERRUPTION OF SERVICES

A.) WHILE WORK IS IN PROGRESS, EXCEPT FOR DESIGNATED SHORT INTERVALS DURING WHICH CONNECTIONS ARE TO BE MADE, CONTINUITY OF SERVICE SHALL BE MAINTAINED TO ALL EXISTING SYSTEMS. INTERRUPTIONS SHALL BE COORDINATED WITH THE OWNERS AS TO TIME AND DURATION. THE CONTRACTOR SHALL BE RESPONSIBLE FOR ANY INTERRUPTIONS TO SERVICE AND SHALL REPAIR ANY DAMAGES TO EXISTING SYSTEMS CAUSED BY HIS OPERATIONS. ANY SHUT DOWNS MUST BE APPROVED IN WRITING BY THE BUILDING MANAGEMENT PRIOR TO SHUTDOWN.

P-9 INFORMATION

A.) THE PLUMBING CONTRACTOR SHALL KEEP HIMSELF FULLY INFORMED AS TO THE SHAPE, SIZE, AND POSITION OF ALL OPENINGS AND FOUNDATIONS REQUIRED FOR HIS APPARATUS AND SHALL GIVE FULL INFORMATION TO THE GENERAL CONTRACTOR SUFFICIENTLY IN ADVANCE OF THE WORK, SO THAT ALL SUCH OPENINGS AND FOUNDATION MAY BE BUILT IN ADVANCE. HE SHALL ALSO FURNISH ALL SLEEVES AND SUPPORTS HEREIN SPECIFIED OR REQUIRED, SO THE GENERAL CONTRACTOR MAY BUILD SAME IN PLACE.

B.) THE PLUMBING CONTRACTOR SHALL OBTAIN DETAILED INFORMATION FROM THE MANUFACTURERS OF APPARATUS, WHICH HE IS TO PROVIDE, FOR THE PROPER METHODS OF INSTALLATION. HE SHALL ALSO OBTAIN ANY INFORMATION FROM OTHER SUBCONTRACTORS TO ENSURE FULL COMPREHENSION OF THE WORK TO BE DONE AND TO ENSURE COORDINATION BETWEEN WORK UNDER THIS SECTION AND ALL OTHER WORK UNDER THIS CONTRACT.

P-10 OPERATING AND MAINTENANCE MANUALS

A.) OPERATING INSTRUCTIONS: PROVIDE OPERATING INSTRUCTIONS TO THE OWNER WITH RESPECT TO OPERATION FUNCTIONS AND MAINTENANCE PROCEDURES FOR ALL EQUIPMENT AND SYSTEMS INSTALLED.

B.) MAINTENANCE MANUALS: AT THE COMPLETION OF THE PROJECT, FOUR COMPLETE MANUALS CONTAINING THE FOLLOWING SHALL BE TURNED OVER TO THE OWNER:

1.) COMPLETE SHOP DRAWINGS OF ALL EQUIPMENT.
2.) OPERATION DESCRIPTION OF ALL SYSTEMS.
3.) NAMES, ADDRESSES, AND TELEPHONE NUMBERS OF ALL SUPPLIERS OF THE SYSTEMS AND SERVICE AGENTS.
4.) PREVENTIVE MAINTENANCE INSTRUCTIONS AND SCHEDULE FOR ALL SYSTEMS.
5.) SPARE PARTS LIST OF ALL SYSTEM COMPONENTS.

P-11 REMOVALS

A.) REMOVE AND DISPOSE OF ALL PIPING, AND ACCESSORIES WITHIN THE PROJECT AREA AS SHOWN ON THE DRAWINGS OR AS REQUIRED FOR THE INSTALLATION OF THE WORK OF THIS PROJECT.

B.) THIS WORK SHALL BE EXECUTED IN AN ORDERLY AND CAREFUL MANNER, WITH DUE CONSIDERATION FOR THE PROTECTION OF ADJACENT ACTIVITIES. DUST PRODUCING DEMOLITION SHALL BE ISOLATED WITH PROPER PRECAUTIONS.

C.) THE CONTRACTOR SHALL ASK THE OWNER FOR INSTRUCTIONS IF HE ENCOUNTERS ANY WORK, THE DEMOLITION OF WHICH MIGHT RESULT IN A HAZARDOUS CONDITION.

P-12 DUST PROTECTION

A.) IT IS IMPERATIVE THAT DURING DEMOLITION AND ALSO DURING NORMAL CONSTRUCTION WHERE THERE IS ANY POSSIBILITY OF DUST DUE TO CONSTRUCTION WORK CONTAMINATING THE OWNER'S EQUIPMENT OR CAUSING A NUISANCE TO PERSONNEL, THIS CONTRACTOR SHALL FURNISH AND INSTALL SUITABLE PROTECTION AS REQUIRED.

B.) WHEREVER POLYETHYLENE IS USED AS PROTECTIVE TARPAULINS OR DROP-CLOTH, IT SHALL BE FIRE-RETARDANT POLYETHYLENE SHEETING, .004" THICK.

P-13 TIME AND MANNER

A.) ALL WORK SHALL BE PERFORMED DURING NORMAL WORKING HOURS UNLESS OTHERWISE DIRECTED BY THE OWNERS REPRESENTATIVE OR NOTED ON THE PLANS

B.) PRIOR TO THE BEGINNING OF WORK THE CONTRACTOR SHALL SUBMIT A SCHEDULE OF WORK TO THE OWNER BASED ON THE DATES GIVEN IN THE PRE-BID MEETING. ANY SHUTDOWNS OF EXISTING SYSTEMS MUST BE VERIFIED IN WRITING WITH THE OWNER'S REPRESENTATIVE.

C.) ANY SHUT-DOWN OF EXISTING SYSTEMS WHERE SUCH SHUT-DOWN IS REQUIRED FOR THE PERFORMANCE OF THE WORK UNDER THE CONTRACT SHALL BE AT SUCH TIMES AS DESIGNATED BY OWNER'S REPRESENTATIVE. RESTORE SYSTEMS TO ORIGINAL CONDITION AFTER PERFORMANCE WORK. THE INTENT IS TO INSURE MINIMUM INTERFERENCE WITH OPERATION OF EXISTING FACILITIES. REPAIR ANY DAMAGE DONE TO BUILDING RESULTING FROM INSTALLATION OF NEW WORK.

P-14 PIPE LABELS

A.) CONTRACTOR TO PROVIDE OPTI-CODE LABELS FOR ALL NEW PIPING. LETTERS AND ARROWS INDICATING FLOW SHALL BE 2½" HIGH, PLACED EVERY 10' AND SHALL BE WHITE ON A GREEN BACKGROUND AND SHALL CONFORM TO ANSI AND OSHA STANDARDS. LABEL ALL COLD WATER, HOT WATER, HOT WATER RE-CIRCULATING, STORM, SANITARY, VENT, GAS PIPING AS FOLLOWS: "COLD WATER", "HOT WATER", "HOT WATER RECIRC", "STORM", ETC. APPLY OVER INSULATION WHERE INSTALLED.

P-14 PIPE

A.) REFER TO "PLUMBING PIPE MATERIAL SCHEDULE"

P-15 PIPING INSTALLATION - GENERAL REQUIREMENTS

A.) REFER TO DRAWINGS FOR REQUIRED PIPING LAYOUTS. CONNECTION DETAILS INDICATE REQUIRED PIPING AT VARIOUS PIECES OF EQUIPMENT. FLOOR PLANS INDICATE GENERAL ROUTING OF PIPING. SPECIFICATIONS DEFINE MATERIALS, INSTALLATION REQUIREMENTS AND SUPPLEMENTARY REQUIREMENTS TO THOSE SHOWN ON DRAWINGS. CONTRACTOR IS RESPONSIBLE FOR PROVIDING A COMPLETE SYSTEM BASED ON ALL DOCUMENTATION PROVIDED. TO EQUIPMENT SCHEDULES FOR NOMINAL FLOW RATES. FINAL SIZING SHALL BE BASED ON FLOW RATE OF CONTRACTOR PURCHASED EQUIPMENT.

B.) PROPER PROVISION SHALL BE MADE FOR EXPANSION AND CONTRACTION IN ALL PORTIONS OF PIPE-WORK, TO PREVENT UNDUE STRAINS ON PIPING OR EQUIPMENT. ALL PIPE SHALL BE SUITABLY REINFORCED AT ALL ANCHOR POINTS.

C.) RUN-OUTS, AND CONNECTIONS TO EQUIPMENT, SHALL BE PROVIDED WITH A FLEXIBLE CONNECTION TO WITHSTAND EXPANSION AND CONTRACTION.

D.) ALL CHANGES IN SIZE AND DIRECTION OF PIPING SHALL BE MADE WITH FITTINGS. DO NOT USE MITER FITTINGS, CLOSE NIPPLES OR STREET ELBOWS.

E.) ALL BRANCH CONNECTIONS SHALL BE MADE WITH TEES, EXCEPT THAT ON STEEL PIPING FORGED STEEL "WELDOLETS" AND "LATROLETS" AS MANUFACTURED BY BONNEY FORGE MAY BE USED WHERE THE BRANCH PIPE IS AT LEAST TWO NOMINAL PIPE SIZES LESS THAN THE MAIN PIPE.

F.) ECCENTRIC REDUCING FITTINGS OR ECCENTRIC REDUCING COUPLINGS SHALL BE USED WHERE REQUIRED BY THE CONTRACT DOCUMENTS OR WHERE REQUIRED TO PREVENT POCKETING OF LIQUID OR NON-CONDENSIBLES.

G.) FITTINGS SHALL BE FACTORY MANUFACTURED. SHOP OR FIELD FABRICATED FITTINGS ARE NOT ACCEPTABLE. FITTINGS SHALL HAVE THE SAME PRESSURE RATING AS THE SYSTEM IN WHICH THEY ARE INSTALLED.

H.) ALL FIXTURES SHALL BE INDIVIDUALLY TRAPPED AND VENTED.

I.) GROUP PIPING WHENEVER PRACTICAL AT COMMON ELEVATIONS.

J.) MINIMUM FALL ON ALL SANITARY DRAINS SHALL BE 1/8" PER FOOT FOR PIPING 4" AND LARGER. 3" AND SMALLER SHALL BE INSTALLED AT 1/4" PER FOOT.

K.) A CLEAN-OUT SHALL BE LOCATED AT THE BASE OF EACH STACK AND LEADER.

L.) INSTALL VENT PIPING PENETRATING ROOFED AREAS TO MAINTAIN INTEGRITY OF ROOF ASSEMBLY. VENT PIPING PASSING THROUGH ROOFS SHALL BE 4 INCH MINIMUM. PIPES SMALLER THAN 4 INCH SHALL BE INCREASED IN SIZE BY MEANS OF A 12 INCH LONG INCREASER. PIPES SHALL TERMINATE AT LEAST 12 INCHES ABOVE THE ROOF OR HIGHER IF REQUIRED BY CODE.

P.) ALL GAS PIPING SHALL BE INSTALLED IN ACCORDANCE WITH CON ED STANDARDS & SPECIFICATIONS.

P-16 SLEEVES AND ESCUTCHEONS

A.) PROVIDE ALL PIPE OPENINGS THROUGH PARTITIONS WITH PIPE SLEEVES. FOR PIPES PENETRATING FIRE RATED PARTITIONS, THE SPACE BETWEEN THE PIPE AND THE SLEEVE SHALL BE SEALED WITH APPROVED FIRE & SMOKE STOPPING MATERIAL.

B.) SLEEVES FOR PIPING PASSING THROUGH MASONRY WALLS SHALL BE BE SCHEDULE 40, STANDARD GALVANIZED STEEL PIPE; IN FRAMED PARTITIONS SHALL BE 20 GAUGE SHEET METAL. THE SPACE BETWEEN THE PIPE AND IT'S SLEEVE SHALL NOT EXCEED ONE-HALF INCH. THE SLEEVE SHALL HAVE A SUFFICIENT LENGTH TO BE FLUSH WITH THE FINISHED WALL SURFACES.

C.) EXPOSED PIPING PASSING THROUGH WALLS, FLOORS OR CEILING SHALL BE FITTED WITH CHROMIUM PLATED CAST BRASS ESCUTCHEONS WITH FASTENING SET SCREWS SIMILAR TO FEE AND MASON MANUFACTURING CO., F. & S. MANUFACTURING CO., OR RITTER PATTERN AND CASTING CO.

P-17 JOINTS AND CONNECTIONS

A.) SOLDERED OR SWEAT: SOLDERED OR SWEAT JOINTS FOR TUBING SHALL BE MADE WITH APPROVED FITTINGS. SURFACES TO BE SOLDERED OR SWEATED SHALL BE PROPERLY CLEANED AND REAMED. THE JOINTS SHALL BE PROPERLY FLUXED AND MADE WITH APPROVED SOLDER. JOINTS IN COPPER WATER TUBING SHALL BE MADE BY APPROPRIATE USE OF APPROVED BRASS OR WROUGHT COPPER WATER FITTINGS IN ACCORDANCE WITH ANSI B16.22, PROPERLY SWEATED OR SOLDERED TOGETHER.

B.) UNIONS: UNIONS IN THE WATER SUPPLY SYSTEM SHALL BE METAL-TO-METAL WITH GROUND SEATS. UNIONS ON DRAINAGE SYSTEMS MAY BE USED ONLY IN THE TRAP SEAL OR ON THE INLET SIDE OF THE TRAP. UNIONS SHALL HAVE METAL-TO-METAL GROUND SEATS.

C.) DIELECTRIC UNIONS/COUPLINGS: INSULATED UNION/COUPLINGS SHALL BE PROVIDED FOR CONNECTING DISSIMILAR MATERIALS. UNION SHALL HAVE A WATER IMPERVIOUS INSULATION BARRIER CAPABLE OF LIMITING GALVANIC CURRENT TO ONE PERCENT OF THE SHORT CIRCUIT CURRENT IN A CORRESPONDING BIMETALLIC JOINT. WHEN DRY, INSULATION BARRIER SHALL BE ABLE TO WITHSTAND A 600-VOLT BREAK DOWN TEST.

P-19 INSULATION - GENERAL REQUIREMENTS

A.) ALL LABOR, MATERIALS, EQUIPMENT AND SERVICES, SHALL BE PROVIDED. ALL OPERATIONS REQUIRED FOR COMPLETE INSTALLATION OF INSULATION AND RELATED WORK AS INDICATED ON THE DRAWING, OR SPECIFIED HEREIN, SHALL BE PERFORMED. THE EXECUTION OF THE WORK SHALL BE IN STRICT ACCORDANCE WITH THE INSULATION MANUFACTURER'S RECOMMENDATIONS AND THE BEST PRACTICE OF THE TRADE.

B.) NO INSULATION SHALL BE APPLIED UNTIL ALL TESTS HAVE BEEN COMPLETED. ONLY INSULATION AND FINISH MATERIALS INCLUDING ADHESIVES, CEMENTS AND MASTICS WHICH CONFORM TO THE REQUIREMENTS OF ALL GOVERNING CODES AND ORDINANCES SHALL BE USED.

C.) ANY EXISTING INSULATION AND SURFACE FINISH DISTURBED OR DAMAGED BY THE INSTALLATION OF NEW EQUIPMENT OR OTHER ALTERATIONS TO THE SYSTEM SHALL BE REPAIRED OR REPLACED TO THE SATISFACTION OF THE ENGINEER.

P-20 INSULATION

A.) ALL PIPE COVERING SPECIFIED HEREIN FOR PIPING SYSTEMS SHALL BE FURNISHED AND INSTALLED BY A COMPETENT PIPE COVERING CONTRACTOR RESPONSIBLE TO THE PLUMBING CONTRACTOR. BEFORE COVERING IS APPLIED, ALL PRESSURE TESTS SHALL HAVE BEEN PERFORMED AND APPROVED, WITH ALL SURFACES TO BE COVERED SHALL HAVE BEEN CLEANED.

B.) THE JACKET SHALL HAVE A PRESSURE SEALING LAB ADHESIVE TO ELIMINATE THE USE OF STAPLES, ADHESIVES, OR BANDS, AND INSTALLATION SHALL BE IN ACCORDANCE WITH MANUFACTURERS' RECOMMENDATIONS.

C.) ALL INSULATION SHALL HAVE A MAXIMUM FLAME SPREAD INDEX OF 25 AND A SMOKE-DEVELOPED INDEX NOT EXCEEDING 450. PIPE INSULATION INSTALLED WITHIN AIR PLENUMS SHALL HAVE A FLAME SPREAD INDEX OF NOT MORE THAN 25 AND A SMOKE-DEVELOPED INDEX OF NOT MORE THAN 50 WHEN TESTED IN ACCORDANCE WITH ASTM E84 OR UL 723.

D.) PIPE COVERING SHALL BE CONTINUOUS AND SHALL BE CAREFULLY FITTED WITH SIDE AND END JOINTS BUTTED TIGHTLY AND STAGGERED. VALVES, FITTINGS, FLANGES, AND ACCESSORIES SHALL HAVE THE SAME THICKNESS OF PIPE COVERING AS THE ADJACENT PIPE. PIPE COVERING FOR THESE ITEMS SHALL BE FACTORY MOLDED TYPE OR FIELD FABRICATED.

E.) INSULATE ALL HOT, COLD WATER, HOT WATER RE-CIRCULATION, DRAIN, AND STORM PIPING WITH FIBERGLASS PIPE INSULATION WITH FIRE RETARDANT VAPOR BARRIER JACKET. THICKNESS OF INSULATION SHALL AS PER TABLE C403.2.10.

F.) PIPING VALVES AND FITTINGS ON ALL INSULATED PIPES SHALL BE PROVIDED WITH FABRICATED SECTIONS OF INSULATION OR PRE-MOLDED FITTING COVERS EQUAL IN THICKNESS AND MATERIAL TO ADJOINING PIPE INSULATION.

P-21 HANGERS AND SUPPORTS

A.) ALL PIPING SHALL BE SUPPORTED FROM THE BUILDING STRUCTURE BY MEANS OF APPROVED HANGERS AND SUPPORTS. PIPING SHALL BE SUPPORTED TO MAINTAIN REQUIRED GRADING AND PITCHING OF LINES, TO PREVENT VIBRATION AND TO SECURE PIPING IN PLACE, AND SHALL BE SO ARRANGED AS TO PROVIDE FOR EXPANSION AND CONTRACTION. CHAIN, PERFORATED STRAP, BAR, OR WIRE HANGERS ARE NOT PERMITTED.

B.) BRANCHES SHALL HAVE SEPARATE SUPPORTS AND NO BRANCH 5'-0' OR LONGER SHALL BE WITHOUT SUPPORT.

C.) WHERE CODES HAVING JURISDICTION REQUIRE CLOSER SPACING, THE HANGER SPACING SHALL BE AS REQUIRED BY CODE IN LIEU OF THE DISTANCES SPECIFIED HEREIN.

D.) PROVIDE HANGERS AT A MAXIMUM DISTANCE OF 2 FEET FROM ALL CHANGES IN DIRECTION (HORIZONTAL AND VERTICAL) ON BOTH SIDES OF CONCENTRATED LOADS INDEPENDENT OF THE PIPING.

E.) HANGERS IN GENERAL FOR ALL HORIZONTAL PIPING SHALL BE CLEVIS TYPE HANGERS. THESE HANGERS SHALL BE SIZED TO PROVIDE FOR INSULATION PROTECTORS AS HEREIN AFTER SPECIFIED.

F.) PIPING SHALL BE SECURELY FASTENED TO THE STRUCTURE WITHOUT OVERSTRESSING ANY PORTION OF THE SUPPORTS OF THE STRUCTURE ITSELF. SUFFICIENT INTERMEDIATE STEEL SHALL BE PROVIDED TO TRANSFER LOADS TO AREAS WHERE THEY CAN SAFELY BE ACCOMMODATED. PIPE SUPPORTS, ANCHORS AND GUIDES SHALL BE SECURED TO STEEL BY WELDED BRACKETS, BEAM CLAMPS, OR BY FASTENING RODS OVER THE BEAM TOP FLANGE, AND TO CONCRETE BY MEANS OF INSERTS, OR IF GREATER LOAD CARRYING CAPACITY IS REQUIRED, BY MEANS OF STEEL FISHPLATES EMBEDDED IN THE CONCRETE ABOVE THE REINFORCEMENT RODS. ALL HANGERS SHALL BE LOCATED TO PERMIT FREE EXPANSION AND CONTRACTION.

G.) PIPING AND TUBING SHALL BE SUPPORTED AT ALL CHANGES IN DIRECTION. MAXIMUM DEFLECTION SHALL BE 1/8". MAXIMUM SPACING BETWEEN SUPPORTS SHALL BE 10FT FOR STEEL PIPING AND 8FT FOR COPPER PIPING 2" AND LARGER, FOR COPPER PIPING LESS THAN 2" SPACING SHALL BE 6FT O.C. MAXIMUM.

H.) PIPE HANGERS AND SUPPORTS COMPLETE WITH RODS, BOLTS, LOCKNUTS, SWIVELS, COUPLINGS, BRACKETS AND ALL OTHER COMPONENTS AND ACCESSORIES SHALL BE PROVIDED.

I.) SUPPORT VERTICAL PIPING AT EVERY FLOOR. SUPPORT RISER PIPING INDEPENDENTLY OF CONNECTED HORIZONTAL PIPING.

J.) PROVIDE COPPER PLATED HANGERS AND SUPPORTS FOR COPPER PIPING.

K.) PRIME COAT EXPOSED STEEL HANGERS AND SUPPORTS. HANGERS AND SUPPORTS LOCATED IN CRAWL SPACES, PIPE SHAFTS, AND SUSPENDED CEILING SPACES ARE NOT CONSIDERED EXPOSED.

L.) PROVIDE HANGERS ADJACENT TO MOTOR DRIVEN EQUIPMENT WITH VIBRATION ISOLATION.

M.) UNLESS OTHERWISE SPECIFICALLY APPROVED, HANGER SIZE AND SPACING SHALL BE WITHIN FOLLOWING LIMITS:

PIPING SIZE	MAX. HANGER SPACING	MIN. ROD SIZE
1"	8FT. O.C.	3/8"
1-1/4" TO 2"	10 FT. O.C.	3/8"
2-1/2" TO 3-1/2"	12 FT. O.C.	1/2"
4" AND 5"	12 FT. O.C	5/8"

P-22 PIPE HANGER TYPES

A.) IN GENERAL, HANGERS SHALL BE OF CLEVIS TYPE OR ROLL TYPE WITH VERTICAL ADJUSTMENT. WHERE SEVERAL LINES OF PIPING RUN AS A COMMON GROUP, THEY SHALL BE SUPPORTED ON A COMMON HANGER BAR OF GALVANIZED CHANNEL OR BACK TO BACK ANGLE SECTIONS OR "UNISTRUT" TYPE.

B.) HANGERS SHALL BE AS FOLLOWS:

APPLICATION	CENTRAL IRON FIG.
NO. CLEVIS HANGER	10
RISER CLAMP - THRU 3"	261

C.) ALTERNATE MANUFACTURERS: GRINNELL, GRABLER, CRANE

P-23 PIPING CONNECTIONS TO EQUIPMENT

A.) FLANGES OR UNIONS SHALL BE PROVIDED AT ALL FINAL CONNECTIONS TO EQUIPMENT AND CONTROL VALVES TO FACILITATE DISMANTLING. OFFSETS SHALL BE PROVIDED AND CONNECTIONS ARRANGED SO THAT THE EQUIPMENT BEING SERVED MAY BE REMOVED WITHOUT DISTURBING THE PIPING.

B.) ALL AUTOMATIC VALVES SHALL BE PROVIDED WITH A GATE VALVE AND A STRAINER ON THE INLET SIDE.

C.) HANGERS AND SUPPORTS FOR CONNECTED EQUIPMENT SHALL CONFORM TO THE CRITERIA FOR PIPING. NO WIRE, TAPE OR METAL BANDS ARE PERMITTED.

D.) FOR EQUIPMENT MOUNTED ON ISOLATION BASES AND WHEREVER INDICATED ON DRAWING AND DETAILS; MERCER RUBBER CO./ MASON INDUSTRIES STAINLESS STEEL BRAIDED FLEXIBLE CONNECTIONS OR EQUIVALENT SHALL BE PROVIDED.

P-24 VALVES

A.) VALVES SHALL BE FURNISHED AND INSTALLED IN ALL BRANCHES SERVING MORE THAN TWO PIECES OF EQUIPMENT FOR ISOLATING OF BRANCH MAINS ELIMINATING THE NECESSITY OF INTERRUPTING SERVICE TO THE ENTIRE BUILDING STRUCTURE FOR MAINTENANCE PURPOSES AND WHERE INDICATED ON THE DRAWINGS. VALVES SHALL BE INSTALLED WITH THE BEST WORKMANSHIP AND APPEARANCE AND SHALL BE GROUPED SO THAT ALL PARTS ARE EASILY ACCESSIBLE FROM A MINIMUM NUMBER OF ACCESS DOORS. MANUFACTURER'S FIGURE NUMBERS ARE SPECIFIED TO INDICATE TYPE AND QUALITY AND CONSTRUCTION, BUT PRODUCTS OF LISTED APPROVED MANUFACTURERS MAY BE SUBSTITUTED FOR THOSE SPECIFIC NUMBERS SHOWN. ALL NEW VALVES SHALL BE TAGGED AND IDENTIFIED WITH 2" BRASS TAGS. VALVE NUMBERS TO BE FURNISHED BY THE BUILDING MANAGEMENT.

B.) ALL VALVES OF SIMILAR SERVICE SHALL BE OF THE SAME MANUFACTURER AND SHALL HAVE MANUFACTURER'S NAME OR TRADE MARK AND THE WORKING PRESSURE STAMPED OR CAST ON THE BODY.

LIBERTY PLAZA SUITES
500 COMMERCE STREET
HAWTHORNE, NY 10532

ARCHITECT
dimovski architecture p.c.
59 Kensico Road, Thornwood, NY 10594
(914) 747-3500 | (914) 747-3588 fax
www.dimovskiarchitecture.com

STRUCTURAL ENGINEER
CHARLES A. MANGANARO CONSULTING ENGINEERS
A PROFESSIONAL CORPORATION
303 SOUTH BROADWAY, SUITE 223, TARRYTOWN, NY 10591-5488
SHAILESH R. NAIK, P.E.
NEW YORK LICENSE No. 072797-1

MEP ENGINEER
OLA Consulting Engineers
60 Broadway,
Hawthorne, NY 10532
914.747.2800
8 West 38th Street,
Suite 501
New York, NY 10018
646.849.4110
olaca.com

NO.	REVISION/ISSUE	DATE
3	ISSUED FOR PERMIT	03-12-2021
2	ISSUED FOR PROGRESS 90%	03-05-2021
1.	ISSUED FOR PROGRESS	02-19-2021

SEAL

STATE OF NEW YORK
JOHN TOME
071678
LICENSED PROFESSIONAL ENGINEER

PROJECT
LIBERTY PLAZA SUITES
500 COMMERCE ST.
TOWN OF MT. PLEASANT, NY

DATE:	AUGUST 12, 2020
PROJECT NO:	NDIM0001.00
DRAWN BY:	HLD
CHECKED BY:	RJ
SCALE:	AS NOTED

DRAWING TITLE
PLUMBING SPECIFICATIONS 1 OF 2

SHEET NO.
P0.2

TABLE C403.2.10
MINIMUM PIPE INSULATION THICKNESS (IN INCHES)[A,C]

FLUID OPERATING TEMPERATURE RANGE AND USAGE (°F)	INSULATION CONDUCTIVITY		NOMINAL PIPE OR TUBE SIZE (INCHES)				
	CONDUCTIVITY BTU*IN./(H*FT²*°F)[B]	MEAN RATING TEMPERATURE, °F	< 1	1 TO < 1½	1½ TO < 4	4 TO < 8	≥ 8
> 350	0.32 - 0.34	250	4.5	5.0	5.0	5.0	5.0
251 - 350	0.29 - 0.32	200	3.0	4.0	4.5	4.5	4.5
201 - 250	0.27 - 0.30	150	2.5	2.5	2.5	3.0	3.0
141 - 200	0.25 - 0.29	125	1.5	1.5	2.0	2.0	2.0
105 - 140	0.21 - 0.28	100	1.0	1.0	1.5	1.5	1.5
40 - 60	0.21 - 0.27	75	0.5	0.5	1.0	1.0	1.0
< 40	0.20 - 0.26	50	0.5	1.0	1.0	1.0	1.5

NOTES:
FOR SI: 1 INCH = 25.4 MM, °C = [(°F)-32]/1.8
a. FOR PIPING SMALLER THAN 1½ INCHES AND LOCATED IN PARTITIONS WITHIN CONDITIONED SPACES, REDUCTION OF THESE THICKNESSES BY 1 INCH SHALL BE PERMITTED (BEFORE THICKNESS ADJUSTMENT REQUIRED IN FOOTNOTE b) BUT NOT TO A THICKNESS LESS THAN 1 INCH.
b. FOR INSULATION OUTSIDE THE STATED CONDUCTIVITY RANGE, THE MINIMUM THICKNESS (T) SHALL BE DETERMINED AS FOLLOWS:
$T = r\{(1 + t/r)K/k - 1\}$
WHERE:
T = MINIMUM INSULATION THICKNESS,
r = ACTUAL OUTSIDE RADIUS OF PIPE,
t = INSULATION THICKNESS LISTED IN THE TABLE FOR APPLICABLE FLUID TEMPERATURE AND PIPE SIZE,
K = CONDUCTIVITY OF ALTERNATE MATERIAL AT MEAN RATING TEMPERATURE INDICATED FOR THE APPLICABLE FLUID TEMPERATURE (BTU * IN/H * FT² * °F)
k = THE UPPER VALUE OF THE CONDUCTIVITY RANGE LISTED IN THE TABLE FOR THE APPLICABLE FLUID TEMPERATURE.
c. FOR DIRECT=BURIED HEATING AND HOT WATER SYSTEM PIPING, REDUCTION OF THESE THICKNESSES BY 1½ INCHES (38 MM) SHALL BE PERMITTED (BEFORE THICKNESS ADJUSTMENT REQUIRED IN FOOTNOTE b BUT NOT TO THICKNESSES LESS THAN 1 INCH (25 MM).

PLUMBING PIPE MATERIAL SCHEDULE

PIPE SYSTEM	SIZE	PIPE			FITTINGS			REMARKS
		MATERIAL	TYPE / WEIGHT	STANDARD	MATERIALS	TYPE / WEIGHT	STANDARD	
DOMESTIC WATER PIPING (CW, HW, HWC)	ALL	CPVC	SCHEDULE 40	ASTM D2846	CPVC	SOLVENT CEMENT	ASTM D2846	INSULATE PER 22 07 19
	ALL	PEX	NA	ASTM F876	PEX	COLD EXPANSION & REINFORCING RING	ASTM F1960	INSULATE PER 22 07 19
	ALL	COPPER	HARD / TYPE L	ASTM B88	COPPER	95 / 5 SOLDER LEAD FREE	ASTM B828 ASME B16.22	
DOMESTIC WATER FIXTURE SUPPLY STUB OUTS (CW, HW, HWC)	ALL	COPPER	HARD / TYPE L	ASTM B88	COPPER	95 / 5 SOLDER LEAD FREE	ASTM B828 ASME B16.22	
	ALL	COPPER ALLOY	HARD / SCHEDULE 40	ASTM B687	COPPER ALLOY	THREADED	ASTM B584	
SANITARY, WASTE, VENT (ABOVE GROUND)	ALL	PVC	SCHEDULE 40	ASTM D2665	PVC	SOLVENT CEMENT	ASTM D2665	
SANITARY, WASTE, VENT (BELOW GROUND)	ALL	CAST IRON	HUB AND SPIGOT EXTRA-HEAVY	ASTM A74 ASTM A888 CISPI 301 / 310	CAST IRON	COMPRESSION GASKET	ASTM C 564	
BUILDING SEWER	ALL	CAST IRON	HUB AND SPIGOT EXTRA-HEAVY	ASTM A74 ASTM A888 CISPI 301 / 310	CAST IRON	COMPRESSION GASKET	ASTM B29	
STORM (ABOVE GROUND)	ALL	PVC	SCHEDULE 40	ASTM D2665	PVC	SOLVENT CEMENT	ASTM D2665	INSULATE PER 22 07 19
STORM (BELOW GROUND)	ALL	CAST IRON	HUB AND SPIGOT EXTRA-HEAVY	ASTM A74 ASTM A888 CISPI 301 / 310	CAST IRON	COMPRESSION GASKET	ASTM C 564	
NATURAL GAS	≤ 4"	STEEL	SCHEDULE 40	ASTM A53 ASTM A106	MALLEABLE IRON	THREADED	ASME B16.3	

NOTES:
1. ALL DOMESTIC WATER PIPE AND FITTING MATERIALS SHALL BE NSF61 COMPLIANT.
2. PIPING IN COMMON AREAS AND APARTMENT MER SHALL BE RATED FOR USE IN AIR PLENUM.

SPECIFICATIONS CONTINUED

C.) VALVES SHALL BE FULL LINE SIZE UNLESS OTHERWISE NOTED.

D.) VALVES SHALL BE CAPABLE OF BEING REPACKED WHILE WIDE OPEN AND OPERATING AT THEIR RATED PRESSURE.

E.) EVERY SECTION OF BRANCH SUPPLY AND RETURN PIPING AND ALL RISERS OF ALL SERVICES SHALL BE CONTROLLED BY A VALVE AT THE MAIN.

F.) EVERY FIXTURE AND OTHER ITEM OF EQUIPMENT SHALL BE INDEPENDENTLY ISOLATED BY MEANS OF VALVES IN ADDITION TO STOP VALVES AT THE FIXTURE OR EQUIPMENT.

G.) FAUCETS, HOSE BIBS AND WALL HYDRANT BRANCHES SHALL HAVE SHUT-OFF VALVES.

H.) VALVES INTENDED TO SUPPLY DRINKING WATER SHALL COMPLY WITH NSF 372 (LEAD-FREE) AND NSF 61.

I.) USE RISING SPINDLE GATE VALVES WHERE SPACE PERMITS.

J.) UNLESS OTHERWISE NOTED OR REQUIRED BY THE APPLICATION, SCREWED VALVES SHALL BE OF BRONZE CONSTRUCTION AND FLANGED VALVES OF CAST IRON CONSTRUCTION WITH BRONZE TRIM. GLOBE AND CHECK VALVE DISCS SHALL BE IN ACCORDANCE WITH MANUFACTURERS RECOMMENDATIONS FOR THE SERVICE. ALL CAST IRON BODY VALVES SHALL HAVE RENEWABLE BRONZE SEAT RINGS AND BRONZE SPINDLES.

K.) NOT USED

L.) NOT USED

M.) VALVE TYPES:

GATE VALVES
A. UP TO 3 INCHES:
MANUFACTURERS:
NIBCO MODEL T-113
STOCKHAM MODEL B-103
CRANE MODEL 438
MSS SP-80, CLASS 125, 200 PSI, BRONZE BODY, BRONZE TRIM, NON RISING STEM, HANDWHEEL, INSIDE SCREW, SOLID WEDGE DISC, SOLDER OR THREADED ENDS. LEAD FREE.

BALL VALVES
MANUFACTURER: NIBCO MODEL T-580-70 OR OTHER ACCEPTABLE MANUFACTURERS OFFERING EQUIVALENT PRODUCTS AS NOTED BELOW.
STOCKHAM
CRANE

CONSTRUCTION, 3 INCHES AND SMALLER: MSS SP-110, 600 PSI, BRONZE, TWO PIECE BODY, CHROME PLATED BRASS BALL, REGULAR PORT, TEFLON SEATS AND STUFFING BOX RING, BLOW-OUT PROOF STEM, LEVER HANDLE, SOLDER OR THREADED ENDS. LEAD FREE.

N.) CHECK VALVES 2½" AND SMALLER: 125 PSI, BRONZE BODY DISK, SWING TYPE. SOLDER END - JENKINS 1222 OR EQUAL, FAIRBANKS, OR LUNKENHEIMER. THREADED ENDS - JENKINS 92-A OR EQUAL, FAIRBANKS, OR LUNKENHEIMER. LEAD FREE.

O.) VACUUM BREAKERS TO BE WATTS REGULATOR MODEL 288A.

P-25 GAUGES AND THERMOMETERS-GENERAL REQUIREMENTS
A.) PRESSURE GAUGES AND OTHER INSTRUMENTATION SHALL BE PROVIDE AS SHOWN ON PIPING DETAILS AND AS SPECIFIED.

B.) REQUIREMENTS FOR INSTRUMENTATION ASSOCIATED WITH TEMPERATURE CONTROLS ARE DEFINED IN THAT PARAGRAPH OF THESE SPECIFICATIONS. TEST WELLS ADJACENT TO SENSORS FOR REMOTE TEMPERATURE GAUGES SHALL BE PROVIDED.

C.) ALL GAUGES SHALL BE LOCATED TO BE EASILY READABLE FROM THE FLOOR.

D.) PROVIDE GAUGES ON WATER SERVICE AND UPSTREAM AND DOWNSTREAM OF STRAINERS, PRESSURE REDUCING VALVES AND PUMPS, AND WHERE OTHERWISE NOTED. MINIMUM ¼" GAUGE COCKS SHALL BE PROVIDED BETWEEN PIPING AND ALL GAUGES.

E.) INSTRUMENTS SHALL BE SELECTED SO THAT THE NORMAL RANGE OF OPERATING PRESSURE FALLS WITHIN THE MIDDLE-THIRD OF THE INSTRUMENT RANGE. COMPOUND GAUGES SHALL BE USED WHEN NORMAL OPERATING PRESSURE IS NEAR OR BELOW ATMOSPHERIC.

F.) EXTENSION NECKS SHALL BE PROVIDED ON WELLS WHERE THERMOMETERS AND PRESSURE GAUGES ARE LOCATED IN INSULATED PIPING, VESSELS, DUCTWORK, PLENUMS OR EQUIPMENT.

G.) WHERE THERMOMETERS ARE INSTALLED IN PIPING 2" AND SMALLER, INCREASE PIPE BY TWO SIZES.

P-26 ELECTRIC WIRING
A.) THE ELECTRICAL CONTRACTOR WILL ERECT ALL STARTING EQUIPMENT FURNISHED UNDER THIS SECTION, EXCEPT STARTERS SPECIFIED TO BE FACTORY MOUNTED AND WIRED AS ALL INTEGRAL PART OF THE EQUIPMENT, AND WILL DO ALL WIRING NECESSARY TO SUPPLY POWER TO THE ELECTRIC MOTOR PROVIDED UNDER THIS SECTION, INCLUDING POWER TO THE STARTERS AND CONNECTIONS FROM STARTERS TO THE MOTORS.

B.) THIS CONTRACTOR SHALL INSTALL ALL MOTOR CONTROL, TEMPERATURE CONTROL WIRING AND INTERLOCK WIRING EXCLUSIVE OF MOTOR POWER WIRING.

C.) ALL ELECTRICAL WORK SHALL BE DONE BY A ELECTRICAL CONTRACTOR LICENSED TO PERFORM WORK IN THE STATE OF NEW YORK.

P-27 ELECTRIC MOTOR CONTROLS
A.) FURNISH AND TURN OVER THE ELECTRICAL CONTRACTOR WHO SHALL ERECT AND WIRE THE SAME, SUITABLE STARTING CONTROLLING EQUIPMENT, AND DISCONNECT SWITCHES.

B.) ALL CONTROLLERS SHALL BE ALLEN-BRADLEY, CUTLER-HAMMER, OR GENERAL ELECTRIC, FULLY ENCLOSED IN NEATLY FURNISHED VENTILATED BOXES. CONTROLLERS SHALL BE OF THE COMBINATION STARTER AND NON-FUSED SWITCH TYPE.

C.) ALL STARTERS FOR MOTORS 1/2 HORSEPOWER AND LARGER SHALL BE MAGNETIC ACROSS-THE-LINE TYPE WITH NON-FUSED DISCONNECT SWITCH UNLESS OTHERWISE NOTED. SUCH STARTERS SHALL BE 208 VOLT, 3 PHASE, 60 CYCLE, A.C. SOURCE.

D.) ALL MAGNETIC STARTERS SUBJECT TO MANUAL START SHALL HAVE MOMENTARY CONTACT START AND STOP BUTTONS BUILT INTO COVER. ALL MAGNETIC STARTERS SUBJECT TO ELECTRICAL INTERLOCKS OR AUTOMATIC CONTROLS SHALL HAVE HAND-OFF-AUTOMATIC SWITCHES BUILT INTO COVER.

E.) ALL MAGNETIC STARTERS SHALL HAVE THERMAL OVERLOAD AND VOLTAGE PROTECTION IN EACH PHASE LEG. PROVIDE EACH STARTER WITH MINIMUM OF TWO AUXILIARY CONTACTS, ONE NORMALLY OPEN AND ONE NORMALLY CLOSED.

P-28 DISINFECTION OF DOMESTIC WATER SYSTEM PIPING
A.) ALL OPEN ENDS OF PIPING, VALVES AND EQUIPMENT SHALL BE PLUGGED EXCEPT WHEN ACTUAL WORK IS BEING PERFORMED, TO MINIMIZE ACCUMULATION OF DIRT AND DEBRIS.

B.) THE CONTRACTOR SHALL DISINFECT WATER PIPING BEFORE IT IS PLACED IN SERVICE.

C.) THE CONTRACTOR SHALL FURNISH ALL EQUIPMENT AND MATERIALS NECESSARY TO DO THE WORK OF DISINFECTING, AND SHALL PERFORM THE WORK IN ACCORDANCE WITH THE PROCEDURE OUTLINED IN THE AWWA STANDARD FOR DISINFECTING WATER MAINS, DESIGNATION C601-68. CHLORINATION IS DETAILED IN AWWA STANDARD M20.

D.) THE DOSAGE SHALL BE SUCH AS TO PRODUCE A CHLORINE RESIDUAL OF NOT LESS THAN 200 PPM AFTER A CONTACT PERIOD OF NO LESS THAN 2 HOURS. AFTER TREATMENT, THE PIPING SHALL BE FLUSHED WITH CLEAN WATER UNTIL THE RESIDUAL CHLORINE CONTENT DOES NOT EXCEED 0.2 PPM.

F.) DURING THE DISINFECTION PERIOD, CARE SHALL BE EXERCISED TO PREVENT CONTAMINATION OF WATER IN THE STREET MAIN OR THE ACTIVE WATER PIPING WITHIN THE BUILDING.

P-29 TESTING
A.) UPON COMPLETION OF A SANITARY DRAIN AND VENT SYSTEM, THE CONTRACTOR SHALL PERFORM AN AIR PRESSURE TEST TO VERIFY THAT THE SYSTEM AS BUILT GAS-TIGHT. THE COMPLETED SANITARY SYSTEM SHALL BE SUBJECTED TO AN AIR PRESSURE EQUIVALENT OF A ONE-INCH COLUMN OF WATER. IF THE SANITARY SYSTEM SUSTAINS A CONSTANT, STATIC PRESSURE FOR A PERIOD OF NOT LESS THAN TEN (10) MINUTES, THE SYSTEM SHALL BE DEEMED GAS-TIGHT. DURING THE TEST, THE SANITARY DRAIN AND VENT SYSTEM IS TO BE SEALED AND NO ADDITIONAL AIR PRESSURE, OR OTHER VARIABLE, IS TO BE INTRODUCED OR APPLIED.

B) COLD WATER, HOT WATER, & HOT WATER RE-CIRCULATION: 150 PSI HYDRAULIC TEST PRIOR TO FINAL FIXTURE CONNECTIONS.

C) GAS: TEST UNDER AIR PRESSURE OF 30 PSI FOR 1 HOUR WITHOUT LOSS ON THE PRESSURE GAUGE, BEFORE FIXTURES OR OTHER OUTLETS ARE CONNECTED. AFTER ALL GAS CONSUMING EQUIPMENT IS INSTALLED AND ADJUSTED, RETEST THE ENTIRE SYSTEM WITH A MERCURY GAUGE MAINTAINING 30 INCHES OF MERCURY FOR 24 HOURS WITH NO DROP IN THE MERCURY COLUMN.

P-30 MISCELLANEOUS
A.) THE CONTRACTOR SHALL PROVIDE THE OWNERS WITH CATALOG DATA, OPERATING INSTRUCTIONS, MAINTENANCE INSTRUCTIONS AND RECORD (AS-BUILT) DRAWINGS OF ALL COMPLETED WORK. AS BUILT DRAWINGS SHALL INCLUDE PUMPS AND PIPING LAY OUT.

B.) ALL WORK SHALL BE GUARANTEED FOR A PERIOD OF ONE YEAR FROM THE DATE OF ACCEPTANCE BY THE OWNER.

C.) THE PLUMBING CONTRACTOR SHALL KEEP AN ACCURATE RECORD OF ALL WORK AS ACTUALLY INSTALLED FROM WORK AS SHOWN ON DESIGN DRAWINGS. SUBMIT AS DRAWING (3) SETS ON 24x36 BLUEPRINTS AND A AUTOCAD ELECTRONIC FORMAT DISK IN VERSION 2004 OR LATER.

D.) ALL MATERIALS, EQUIPMENT, FIXTURES, PIPING, AND DEVICES SHALL BE GUARANTEED TO BE FREE FROM MECHANICAL DEFECTS OR FAULTY WORKMANSHIP FOR A PERIOD OF 1 YEAR FROM THE DATE OF WRITTEN ACCEPTANCE BY THE ENGINEER FOR THE OWNER.

E.) LABOR AND MATERIAL REQUIRED TO FULFILL THE REQUIREMENTS OF THIS GUARANTEE SHALL BE FURNISHED TO THE OWNER BY THIS CONTRACTOR AT NO ADDITIONAL COST.

END OF SPECIFICATIONS

LIBERTY PLAZA SUITES

500 COMMERCE STREET
HAWTHORNE, NY 10532

ARCHITECT
dimovski architecture
59 Kensico Road, Thornwood, NY 10594
(914) 747-3500 | (914) 747-3588 fax
www.dimovskiarchitecture.com

STRUCTURAL ENGINEER
CHARLES A. MANGANARO
CONSULTING ENGINEERS
A PROFESSIONAL CORPORATION
303 SOUTH BROADWAY, SUITE 223, TARRYTOWN, NY 10591-5488
SHAILESH R. NAIK, P.E.
NEW YORK LICENSE No. 072797-1

MEP ENGINEER
OLA Consulting Engineers
60 Broadway,
Hawthorne, NY 10532
914.747.2900
8 West 38th Street,
Suite 901
New York, NY 10018
646.848.4110
olace.com

NO.	REVISION/ISSUE	DATE
3	ISSUED FOR PERMIT	03-12-2021
2	ISSUED FOR PROGRESS 90%	03-05-2021
1.	ISSUED FOR PROGRESS	02-19-2021

SEAL
STATE OF NEW YORK · JOHN TORRE · LICENSED PROFESSIONAL ENGINEER · 071678

PROJECT
LIBERTY PLAZA SUITES
500 COMMERCE ST.
TOWN OF MT. PLEASANT, NY

DATE:	AUGUST 12, 2020
PROJECT NO:	NDIM0001.00
DRAWN BY:	HLD
CHECKED BY:	RJ
SCALE:	AS NOTED

DRAWING TITLE
PLUMBING SPECIFICATIONS 2 OF 2

SHEET NO.
P0.3

#PLUMBING KEYED NOTES

1. 4"S UP.
2. 4"S UP TO CODP.
3. 3"W UP TO FLOOR DRAIN. PROVIDE 2"V.
4. 2"V UP.
5. 4"W UP TO STANDPIPE.

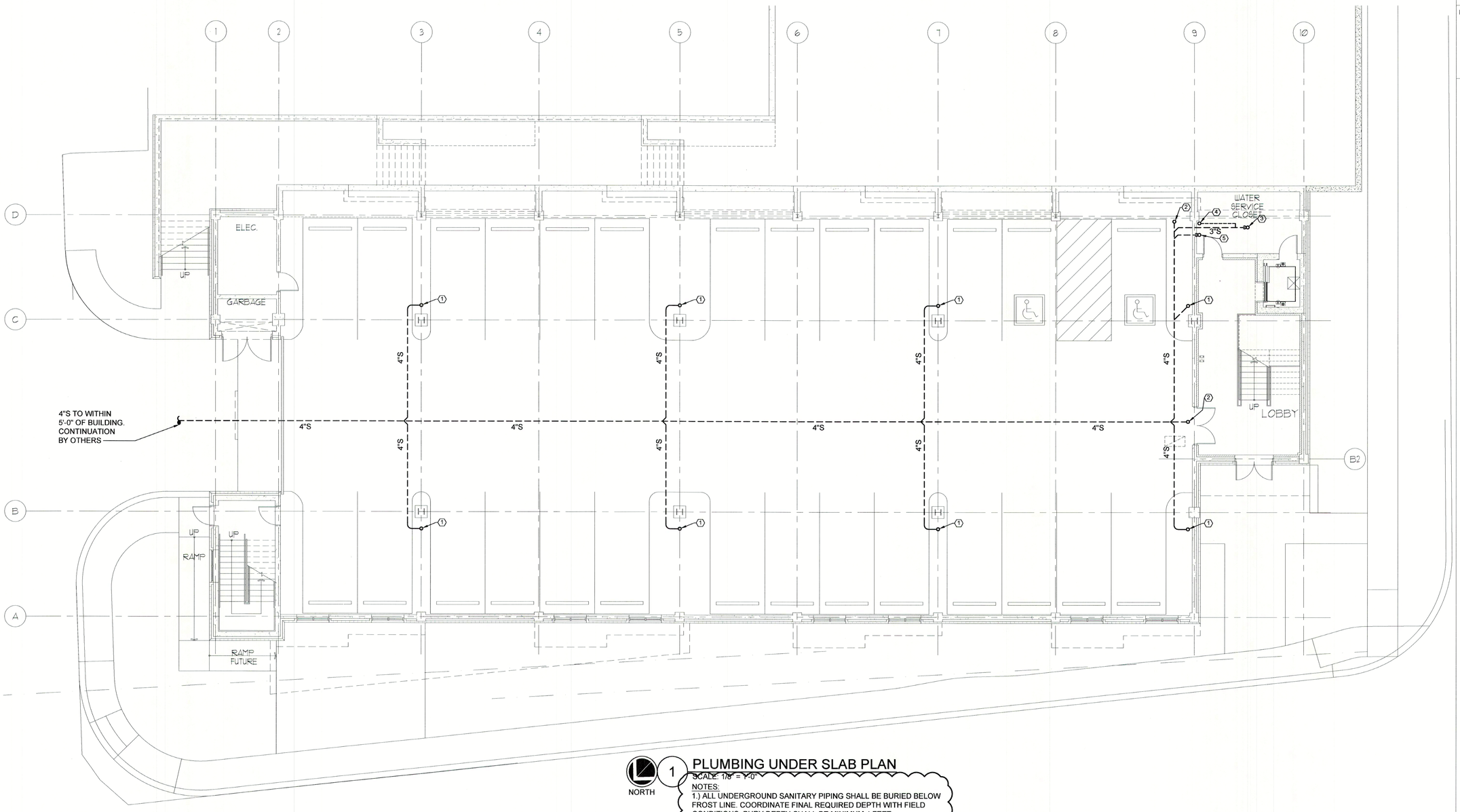

1 PLUMBING UNDER SLAB PLAN

NORTH

SCALE: 1/8" = 1'-0"

NOTES:

1.) ALL UNDERGROUND SANITARY PIPING SHALL BE BURIED BELOW FROST LINE. COORDINATE FINAL REQUIRED DEPTH WITH FIELD CONDITIONS. BURY DEPTH SHALL BE MINIMUM 4 FEET.

LIBERTY PLAZA SUITES

500 COMMERCE STREET
HAWTHORNE, NY 10532

ARCHITECT

dimovski architecture p.c.
59 Kensico Road, Thornwood, NY 10594
(914) 747-3500 | (914) 747-3588 fax
www.dimovskiarchitecture.com

STRUCTURAL ENGINEER

CHARLES A. MANGANARO
CONSULTING ENGINEERS
A PROFESSIONAL CORPORATION
303 SOUTH BROADWAY, SUITE 223, TARRYTOWN, NY 10591-5488

SHAILESH R. NAIK, P.E.
NEW YORK LICENSE No. 072797-1

MEP ENGINEER

OLA Consulting Engineers
50 Broadway,
Hawthorne, NY 10532
914.747.2500
8 West 38th Street,
Suite 901
New York, NY 10018
646.848.4110
olace.com

NO.	REVISION/ISSUE	DATE
1	DOB COMMENTS	04-26-2021
4	ISSUED FOR PRICING	03-16-2021
3	ISSUED FOR PERMIT	03-12-2021
2	ISSUED FOR PROGRESS 90%	03-05-2021
1.	ISSUED FOR PROGRESS	02-19-2021

SEAL

STATE OF NEW YORK · JOHN TOME · 071678 · LICENSED PROFESSIONAL ENGINEER

PROJECT

LIBERTY PLAZA SUITES

500 COMMERCE ST.
TOWN OF MT. PLEASANT, NY

DATE:	AUGUST 12, 2020
PROJECT NO:	NDIM0001.00
DRAWN BY:	HLD
CHECKED BY:	RJ
SCALE:	AS NOTED

DRAWING TITLE

PLUMBING FIRST FLOOR NEW WORK PLAN

SHEET NO.

P2.0

PLUMBING KEYED NOTES

1. 4"S RISER UP IN SHAFT.
2. 2"W UP TO SHOWER/TUB. PROVIDE 2"P TRAP AND 1-1/2"W CONNECTION TO TRANSITION TO VENT ON FLOOR ABOVE. REFER TO RISER DIAGRAM FOR PIPING DISTRIBUTION.
3. 4"S UP TO WC. PROVIDE 2"W CONNECTION TO TRANSITION TO VENT ON FLOOR ABOVE. REFER TO RISER DIAGRAM FOR PIPING DISTRIBUTION. 1
4. 2"W UP TO LAV.
5. 2"W UP TO KITCHEN SINK.
6. 3"W UP TO FLOOR DRAIN. PROVIDE 2"W CONNECTION TO TRANSITION TO VENT ON FLOOR ABOVE. REFER TO RISER DIAGRAM FOR PIPING DISTRIBUTION..
7. 2"W UP TO LAUNDRY MACHINE STANDPIPE.
8. 4"W DN BELOW SLAB. PROVIDE CLEAN OUT IN VERTICAL PIPE. 1
9. 1-1/2"W UP. TRANSITION TO 1½"V MINIMUM 6" ABOVE FLOOD RIM. CONNECT TO VENT RISER ON FLOOR ABOVE. REFER TO RISER DIAGRAM FOR PIPING DISTRIBUTION.
10. 2"W UP. TRANSITION TO 2"V MINIMUM 6"ABOVE FLOOD RIM. CONNECT TO VENT RISER ON FLOOR ABOVE. REFER TO RISER DIAGRAM FOR PIPING DISTRIBUTION. 1
11. 4"SD UP.
12. 3"SD UP TO PIPE TRANSITION PIECE. CONNECT TO ROOF LEADERS BY ARCHITECT. COORDINATE FINAL TRANSITION PIECE WITH LEADER SIZE. REFER TO ARCHITECTURAL PLANS FOR CONTINUATION TO ROOF LEVEL.

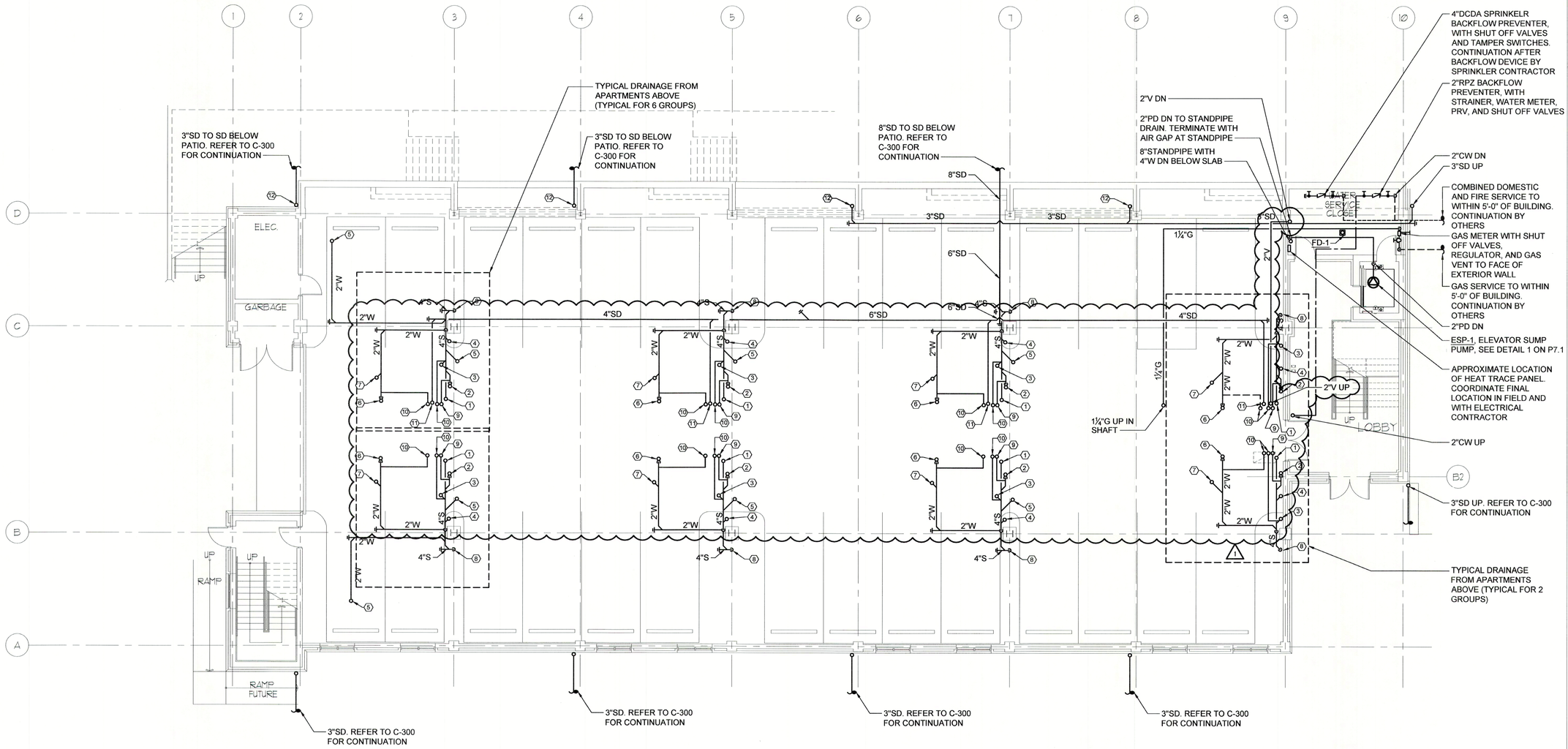

1 PLUMBING FIRST FLOOR PLAN

SCALE: 1/8" = 1'-0"

NOTES:

1. ALL EXPOSED PIPING IN GARAGE SHALL BE INSULATED.
2. PROVIDE HEAT TRACE FOR ALL EXPOSED PIPING IN GARAGE LEVEL. CONTRACTOR SHALL COORDINATE FINAL PIPING LENGTHS AND REQUIRED HEAT TRACE WITH PIPING IN FIELD. COORDINATE WITH ELECTRICAL CONTRACTOR FOR CIRCUITING TO PANEL. REFER TO EQUIPMENT NOTES ON DRAWING P0.1 FOR ADDITIONAL INFORMATION.
   - 2.1. STORM PIPING: APPROXIMATELY 210 LINEAR FEET.
   - 2.2. SANITARY PIPING: APPROXIMATELY 620 LINEAR FEET.
3. REFER TO DOMESTIC, SANITARY, STORM, AND GAS RISER DIAGRAMS FOR PIPING DISTRIBUTION.
4. GAS REGULATOR AND VENTING SHALL COMPLY TO ALL 2020 NYSFGC. FINAL INSTALLATION REQUIRMENTS SHALL BE COORDINATED WITH GAS SERVICE PROVIDER. 1

LIBERTY PLAZA SUITES

500 COMMERCE STREET
HAWTHORNE, NY 10532

ARCHITECT

dimovski architecture P.C.
59 Kensico Road, Thornwood, NY 10594
(914) 747-3500 | (914) 747-3588 fax
www.dimovskiarchitecture.com

STRUCTURAL ENGINEER

CHARLES A. MANGANARO CONSULTING ENGINEERS
A PROFESSIONAL CORPORATION
303 SOUTH BROADWAY, SUITE 223, TARRYTOWN, NY 10591-5488
SHAILESH R. NAIK, P.E.
NEW YORK LICENSE No. 072797-1

MEP ENGINEER

OLA Consulting Engineers
60 Broadway,
Hawthorne, NY 10532
914.747.2800
8 West 38th Street,
Suite 501
New York, NY 10018
646.545.6170
olace.com

NO.	REVISION/ISSUE	DATE
1	DOB COMMENTS	04-26-2021
4	ISSUED FOR PRICING	03-16-2021
3	ISSUED FOR PERMIT	03-12-2021
2	ISSUED FOR PROGRESS 90%	03-05-2021
1.	ISSUED FOR PROGRESS	02-19-2021

SEAL

STATE OF NEW YORK * JOHN TORRE * 071676 LICENSED PROFESSIONAL ENGINEER

PROJECT

LIBERTY PLAZA SUITES
500 COMMERCE ST.
TOWN OF MT. PLEASANT, NY

DATE:	AUGUST 12, 2020
PROJECT NO:	NDIM0001.00
DRAWN BY:	HLD
CHECKED BY:	RJ
SCALE:	AS NOTED

DRAWING TITLE

PLUMBING FIRST FLOOR NEW WORK PLAN

SHEET NO.

P2.1

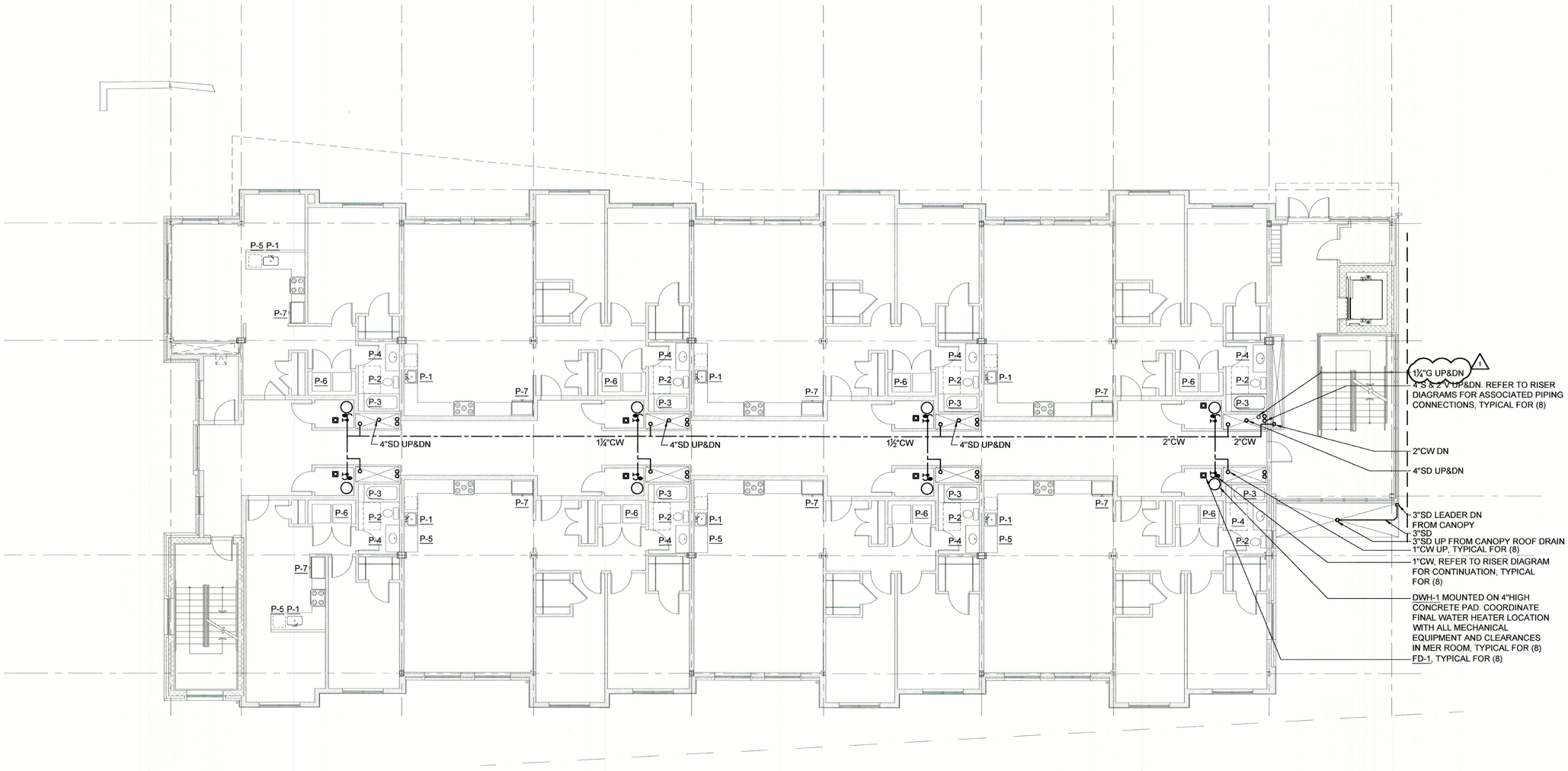

NORTH

1 PLUMBING SECOND FLOOR PLAN
SCALE: 1/8" = 1'-0"

LIBERTY PLAZA SUITES

500 COMMERCE STREET
HAWTHORNE, NY 10532

ARCHITECT

dimovski architecture p.c.
59 Kensico Road, Thornwood, NY 10594
(914) 747-3500 | (914) 747-3588 fax
www.dimovskiarchitecture.com

STRUCTURAL ENGINEER

CHARLES A. MANGANARO
CONSULTING ENGINEERS
A PROFESSIONAL CORPORATION
303 SOUTH BROADWAY, SUITE 223, TARRYTOWN, NY 10591-5488

SHAILESH R. NAIK, P.E.
NEW YORK LICENSE No. 072797-1

MEP ENGINEER

OLA Consulting Engineers
50 Broadway,
Hawthorne, NY 10532
914.747.2600

8 West 38th Street,
Suite 501
New York, NY 10018
646.849.4110

olace.com

NO.	REVISION/ISSUE	DATE
1	DOB COMMENTS	04-26-2021
4	ISSUED FOR PRICING	03-16-2021
3	ISSUED FOR PERMIT	03-12-2021
2	ISSUED FOR PROGRESS 90%	03-05-2021
1.	ISSUED FOR PROGRESS	02-19-2021

SEAL

STATE OF NEW YORK
JOHN TORRE
071678
LICENSED PROFESSIONAL ENGINEER

PROJECT

LIBERTY PLAZA SUITES
500 COMMERCE ST.
TOWN OF MT. PLEASANT, NY

DATE:	AUGUST 12, 2020
PROJECT NO:	NDIM0001.00
DRAWN BY:	HLD
CHECKED BY:	RJ
SCALE:	AS NOTED

DRAWING TITLE

PLUMBING SECOND FLOOR NEW WORK PLAN

SHEET NO.

P2.2

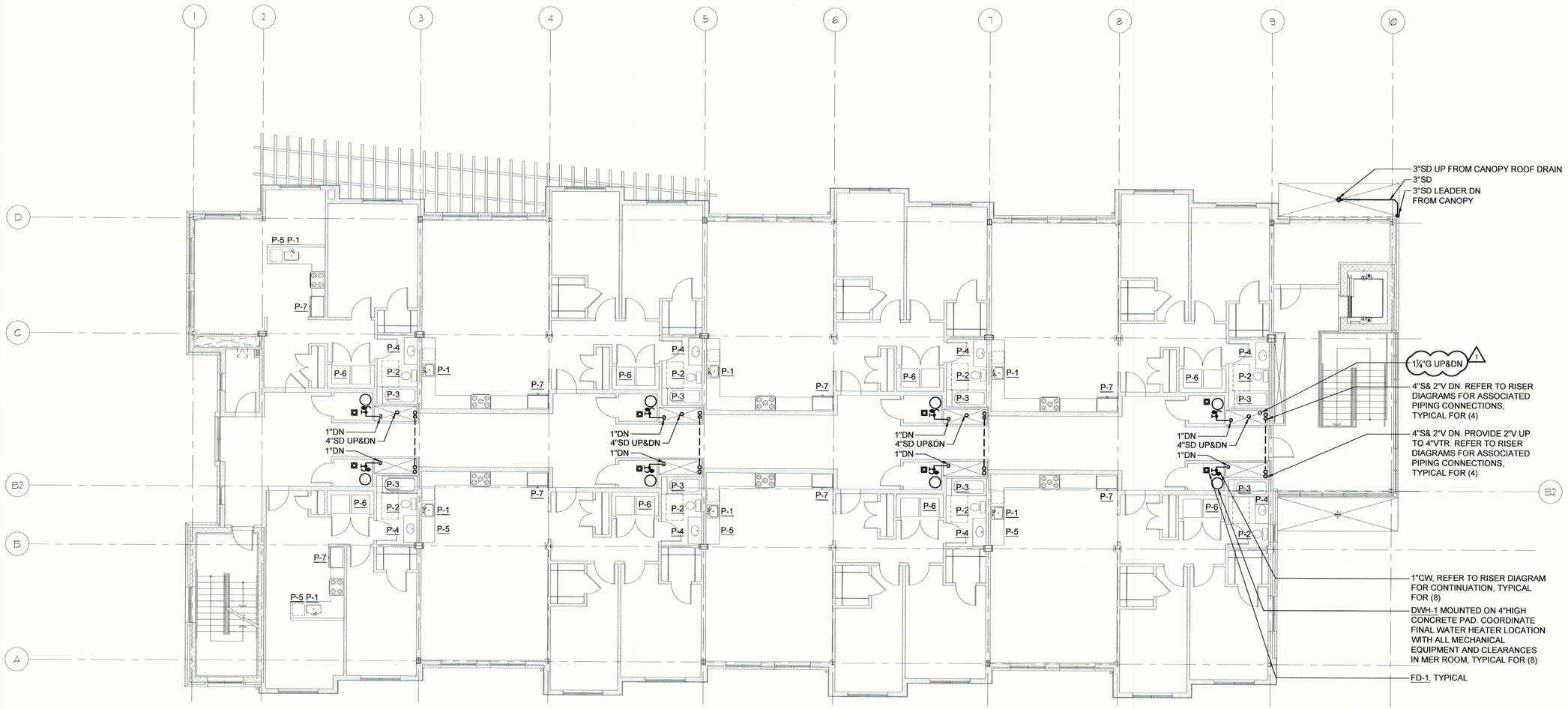

NORTH

1 PLUMBING THIRD FLOOR PLAN
SCALE: 1/8" = 1'-0"

LIBERTY PLAZA SUITES

500 COMMERCE STREET
HAWTHORNE, NY 10532

ARCHITECT

dimovski architecture p.c.
59 Kensico Road, Thornwood, NY 10594
(914) 747-3500 | (914) 747-3588 fax
www.dimovskiarchitecture.com

STRUCTURAL ENGINEER

CHARLES A. MANGANARO
CONSULTING ENGINEERS
A PROFESSIONAL CORPORATION
303 SOUTH BROADWAY, SUITE 223, TARRYTOWN, NY 10591-5488

SHAILESH R. NAIK, P.E.
NEW YORK LICENSE No. 072797-1

MEP ENGINEER

O.L.A Consulting Engineers
50 Broadway,
Hawthorne, NY 10532
914.747.2800
8 West 38th Street,
Suite 501
New York, NY 10018
646.849.4110
olaca.com

NO.	REVISION/ISSUE	DATE
1	DOB COMMENTS	04-26-2021
4	ISSUED FOR PRICING	03-16-2021
3	ISSUED FOR PERMIT	03-12-2021
2	ISSUED FOR PROGRESS 90%	03-05-2021
1.	ISSUED FOR PROGRESS	02-19-2021

SEAL

STATE OF NEW YORK · JOHN TORRE · LICENSED PROFESSIONAL ENGINEER · 071678

PROJECT

LIBERTY PLAZA SUITES
500 COMMERCE ST.
TOWN OF MT. PLEASANT, NY

DATE:	AUGUST 12, 2020
PROJECT NO:	NDIM0001.00
DRAWN BY:	HLD
CHECKED BY:	RJ
SCALE:	AS NOTED

DRAWING TITLE

PLUMBING THIRD FLOOR NEW WORK PLAN

SHEET NO.

P2.3

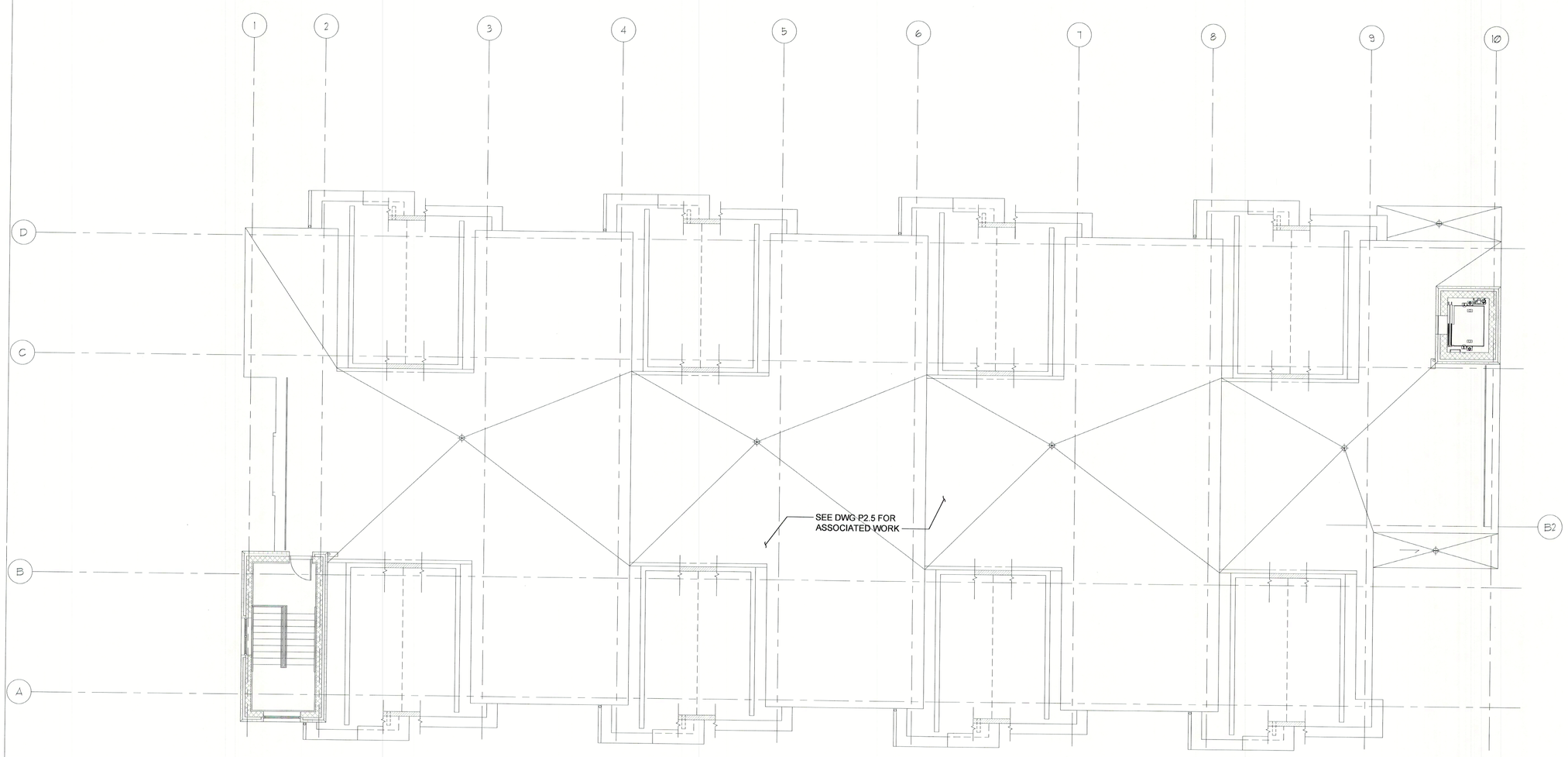

NORTH

1 PLUMBING FOURTH FLOOR PLAN
SCALE: 1/8" = 1'-0"

LIBERTY PLAZA SUITES

500 COMMERCE STREET
HAWTHORNE, NY 10532

ARCHITECT

dimovski architecture PLLC
59 Kensico Road, Thornwood, NY 10594
(914) 747-3500 | (914) 747-3588 fax
www.dimovskiarchitecture.com

STRUCTURAL ENGINEER

CHARLES A. MANGANARO
CONSULTING ENGINEERS
A PROFESSIONAL CORPORATION
303 SOUTH BROADWAY, SUITE 223, TARRYTOWN, NY 10591-5488

SHAILESH R. NAIK, P.E.
NEW YORK LICENSE No. 072797-1

MEP ENGINEER

OLA Consulting Engineers
50 Broadway,
Hawthorne, NY 10532
914.747.2800

8 West 38th Street,
Suite 601
New York, NY 10018
646.849.4110

olaca.com

NO.	REVISION/ISSUE	DATE
1	DOB COMMENTS	04-26-2021
4	ISSUED FOR PRICING	03-16-2021
3	ISSUED FOR PERMIT	03-12-2021
2	ISSUED FOR PROGRESS 90%	03-05-2021
1.	ISSUED FOR PROGRESS	02-19-2021

SEAL

STATE OF NEW YORK
JOHN TORRE
071678
LICENSED PROFESSIONAL ENGINEER

PROJECT

LIBERTY PLAZA SUITES
500 COMMERCE ST.
TOWN OF MT. PLEASANT, NY

DATE:	AUGUST 12, 2020
PROJECT NO:	NDIM0001.00
DRAWN BY:	HLD
CHECKED BY:	RJ
SCALE:	AS NOTED

DRAWING TITLE

PLUMBING FOURTH LEVEL ROOF PLAN

SHEET NO.

P2.4

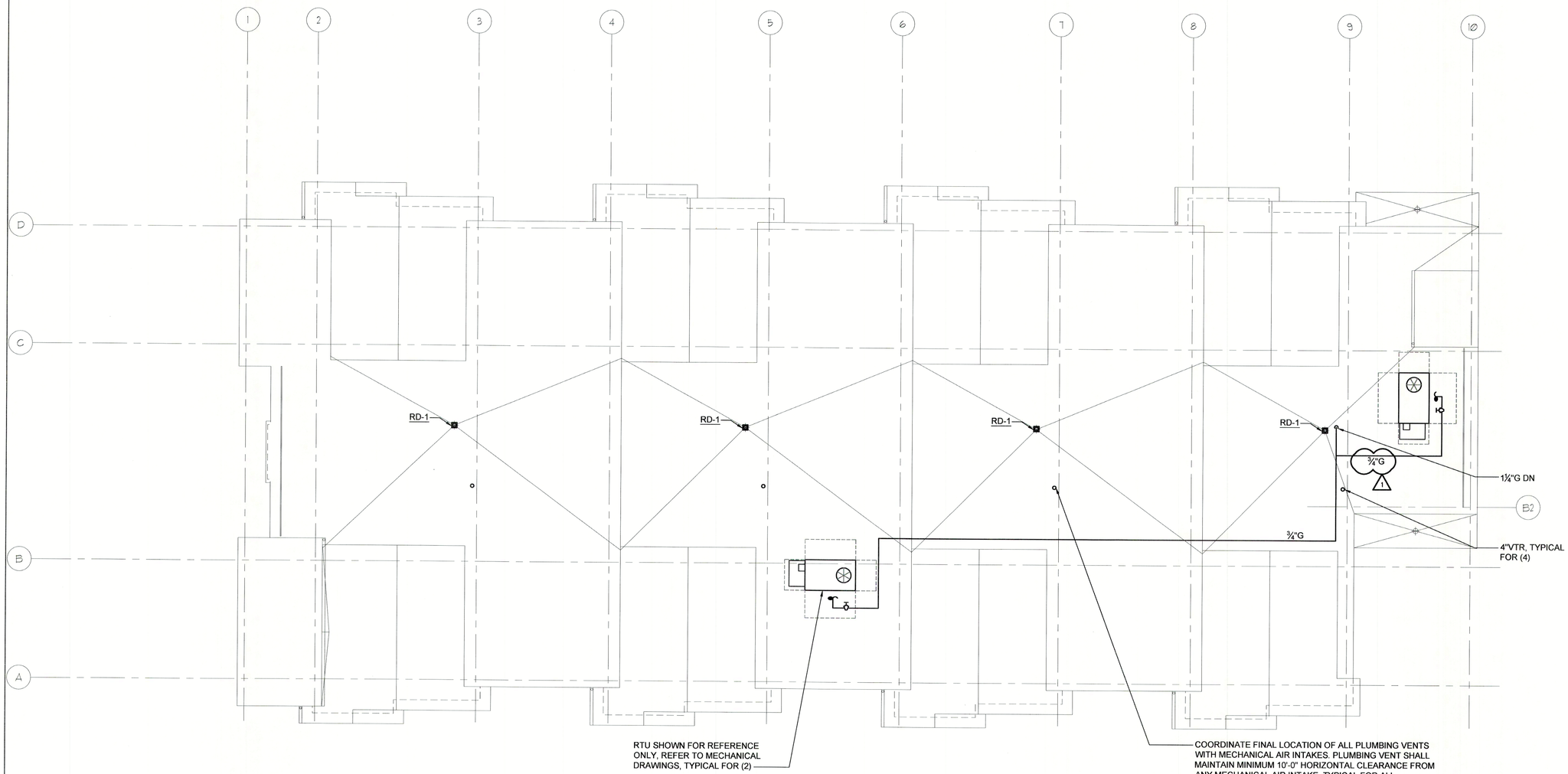

1 PLUMBING ROOF NEW WORK PLAN

SCALE: 1/8" = 1'-0"

NORTH

NOTES:
1. ALL GAS PIPING SHALL BE SUPPORTED WITH ROOF PIPE SUPPORTS.

LIBERTY PLAZA SUITES

500 COMMERCE STREET
HAWTHORNE, NY 10532

ARCHITECT

dimovski architecture PLLC
59 Kensico Road, Thornwood, NY 10594
(914) 747-3500 | (914) 747-3588 fax
www.dimovskiarchitecture.com

STRUCTURAL ENGINEER

CHARLES A. MANGANARO
CONSULTING ENGINEERS
A PROFESSIONAL CORPORATION
303 SOUTH BROADWAY, SUITE 223, TARRYTOWN, NY 10591-5488

SHAILESH R. NAIK, P.E.
NEW YORK LICENSE No. 072797-1

MEP ENGINEER

OLA Consulting Engineers
50 Broadway,
Hawthorne, NY 10532
914.747.2800

8 West 38th Street,
Suite 801
New York, NY 10018
646.849.4110

olace.com

NO.	REVISION/ISSUE	DATE
1	DOB COMMENTS	04-26-2021
4	ISSUED FOR PRICING	03-16-2021
3	ISSUED FOR PERMIT	03-12-2021
2	ISSUED FOR PROGRESS 90%	03-05-2021
1.	ISSUED FOR PROGRESS	02-19-2021

SEAL

STATE OF NEW YORK · JOHN TORRE · LICENSED PROFESSIONAL ENGINEER · 071678

PROJECT

LIBERTY PLAZA SUITES
500 COMMERCE ST.
TOWN OF MT. PLEASANT, NY

DATE:	AUGUST 12, 2020
PROJECT NO:	NDIM0001.00
DRAWN BY:	HLD
CHECKED BY:	RJ
SCALE:	AS NOTED

DRAWING TITLE

PLUMBING ROOF NEW WORK PLAN

SHEET NO.

P2.5

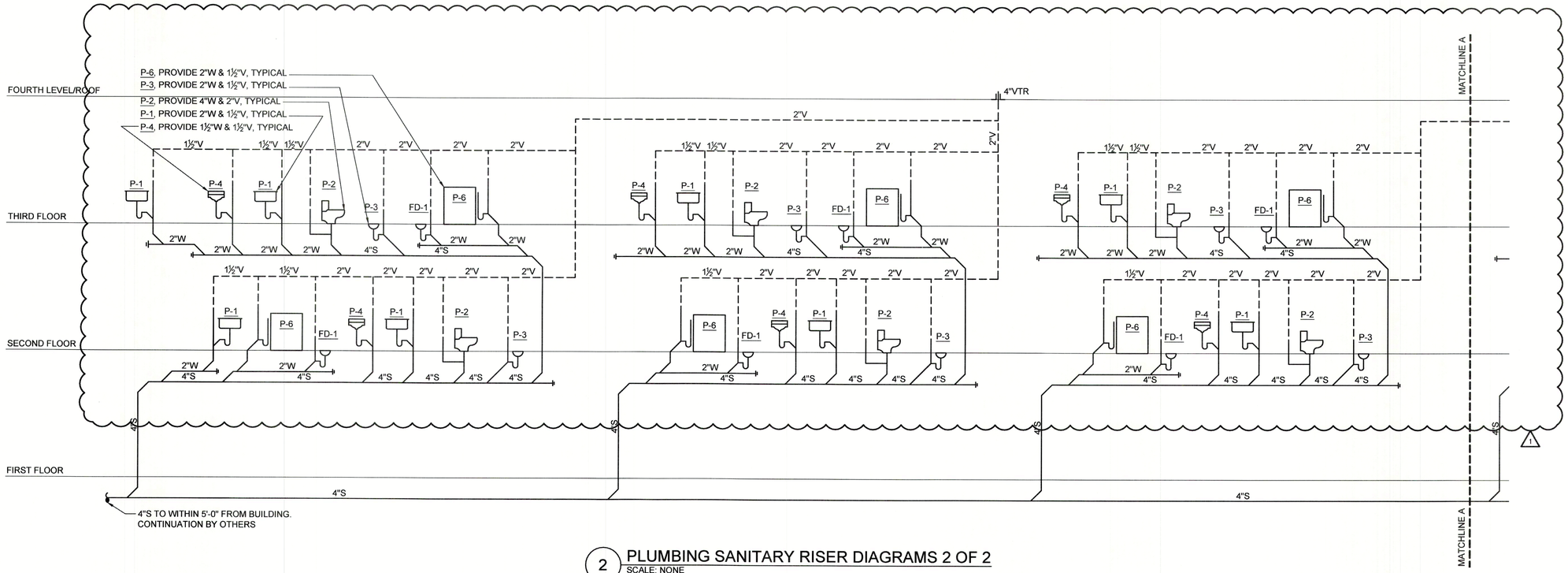

2 PLUMBING SANITARY RISER DIAGRAMS 2 OF 2

SCALE: NONE

NOTES:

1. REFER TO PLUMBING FIXTURE SCHEDULE FOR PIPE SPECS TO EACH FIXTURE.
2. ALL VENT CONNECTIONS SHALL BE MINIMUM 6" ABOVE FLOOD LEVEL RIM OF FIXTURE SERVED.

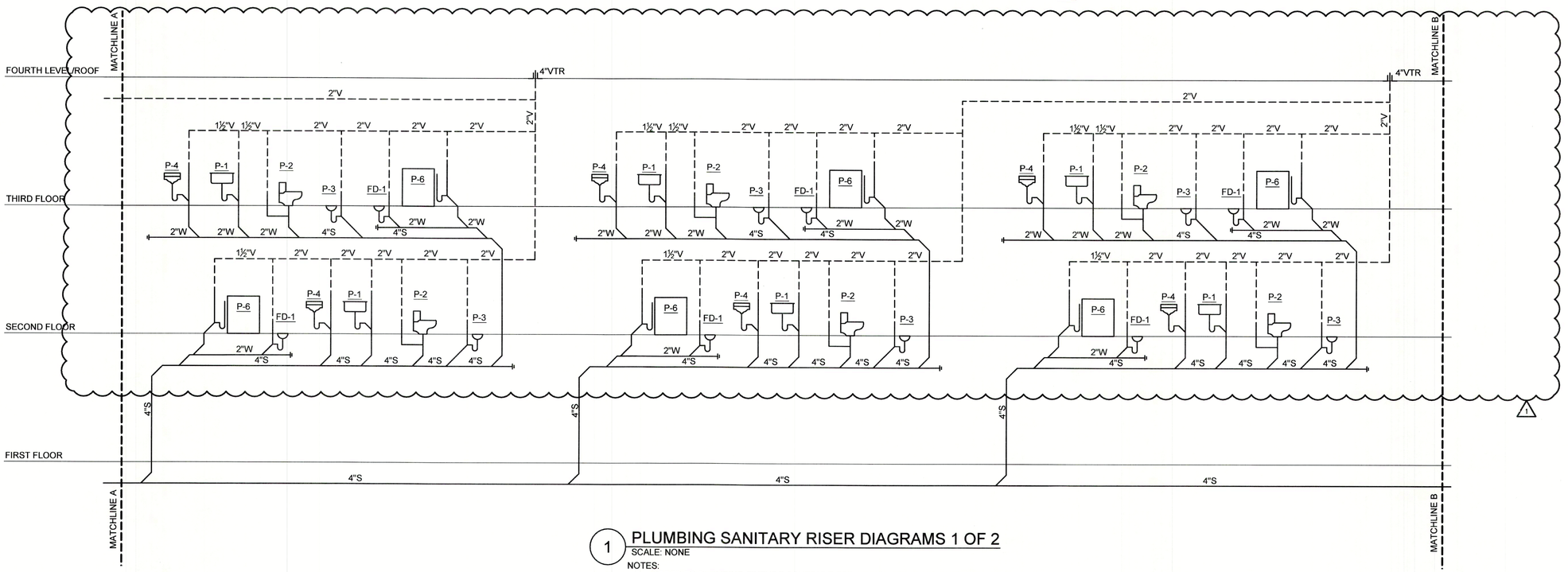

1 PLUMBING SANITARY RISER DIAGRAMS 1 OF 2

SCALE: NONE

NOTES:

1. REFER TO PLUMBING FIXTURE SCHEDULE FOR PIPE SPECS TO EACH FIXTURE.
2. ALL VENT CONNECTIONS SHALL BE MINIMUM 6" ABOVE FLOOD LEVEL RIM OF FIXTURE SERVED.

LIBERTY PLAZA SUITES

500 COMMERCE STREET
HAWTHORNE, NY 10532

ARCHITECT

dimovski architecture PLLC
59 Kensico Road, Thornwood, NY 10594
(914) 747-3500 | (914) 747-3588 fax
www.dimovskiarchitecture.com

STRUCTURAL ENGINEER

CHARLES A. MANGANARO
CONSULTING ENGINEERS
A PROFESSIONAL CORPORATION
303 SOUTH BROADWAY, SUITE 223, TARRYTOWN, NY 10591-5488

SHAILESH R. NAIK, P.E.
NEW YORK LICENSE No. 072797-1

MEP ENGINEER

OLA Consulting Engineers
50 Broadway,
Hawthorne, NY 10532
914.747.2800
8 West 38th Street,
Suite 601
New York, NY 10018
646.849.4170
olaca.com

NO.	REVISION/ISSUE	DATE
1	DOB COMMENTS	04-26-2021
4	ISSUED FOR PRICING	03-16-2021
3	ISSUED FOR PERMIT	03-12-2021
2	ISSUED FOR PROGRESS 90%	03-05-2021
1.	ISSUED FOR PROGRESS	02-19-2021

SEAL

PROJECT

LIBERTY PLAZA SUITES
500 COMMERCE ST.
TOWN OF MT. PLEASANT, NY

DATE:	AUGUST 12, 2020
PROJECT NO:	NDIM0001.00
DRAWN BY:	HLD
CHECKED BY:	RJ
SCALE:	AS NOTED

DRAWING TITLE

PLUMBING SANITARY RISER DIAGRAMS 1 OF 2

SHEET NO.

P5.1

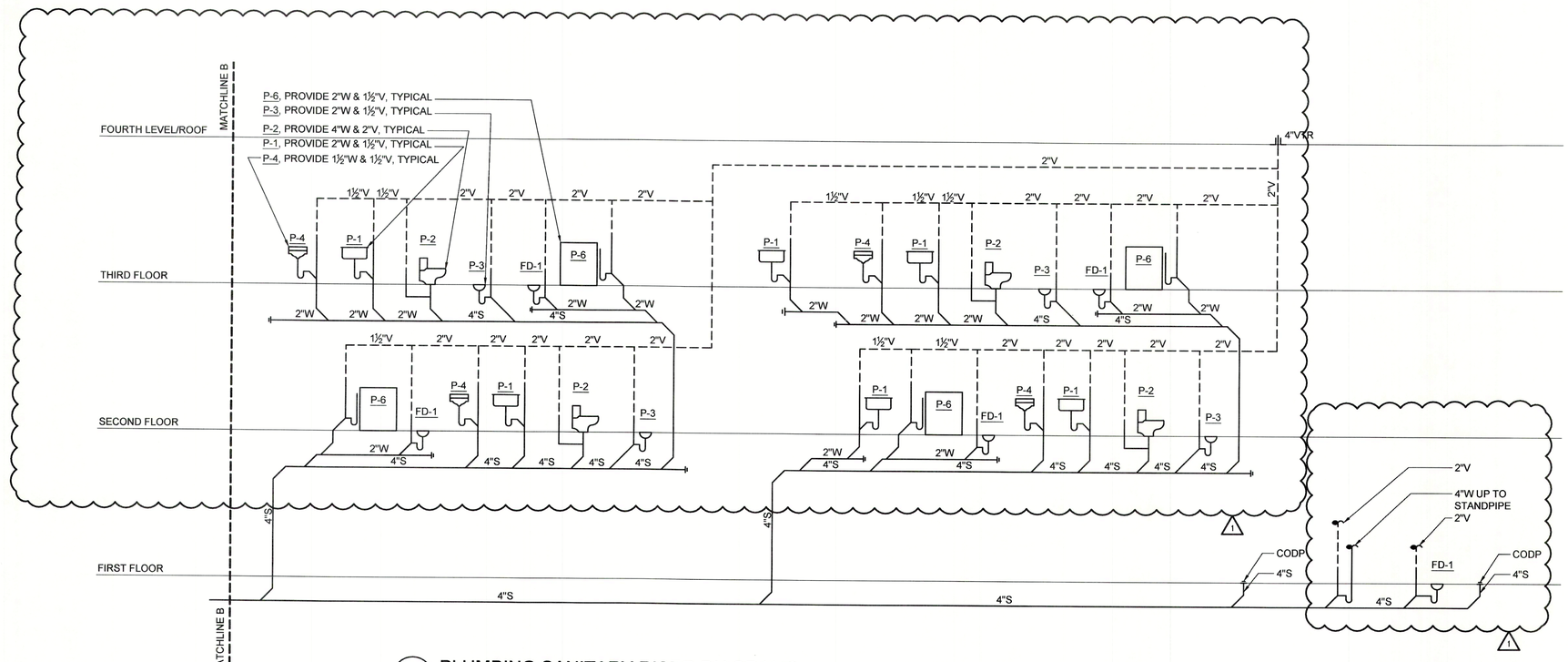

1 PLUMBING SANITARY RISER DIAGRAMS

SCALE: NONE

NOTES:

1. REFER TO PLUMBING FIXTURE SCHEDULE FOR PIPE SPECS TO EACH FIXTURE
2. ALL VENT CONNECTIONS SHALL BE MINIMUM 6" ABOVE FLOOD LEVEL RIM OF FIXTURE SERVED.

1

LIBERTY PLAZA SUITES

500 COMMERCE STREET
HAWTHORNE, NY 10532

ARCHITECT

dimovski architecture
59 Kensico Road, Thornwood, NY 10594
(914) 747-3500 | (914) 747-3588 fax
www.dimovskiarchitecture.com

STRUCTURAL ENGINEER

CHARLES A. MANGANARO
CONSULTING ENGINEERS
A PROFESSIONAL CORPORATION
303 SOUTH BROADWAY, SUITE 223, TARRYTOWN, NY 10591-5488

SHAILESH R. NAIK, P.E.
NEW YORK LICENSE No. 072797-1

MEP ENGINEER

OLA Consulting Engineers
50 Broadway,
Hawthorne, NY 10532
914.747.2800
8 West 38th Street,
Suite 801
New York, NY 10018
646.840.4110
ola-ce.com

NO.	REVISION/ISSUE	DATE
1	DOB COMMENTS	04-26-2021
4	ISSUED FOR PRICING	03-16-2021
3	ISSUED FOR PERMIT	03-12-2021
2	ISSUED FOR PROGRESS 90%	03-05-2021
1.	ISSUED FOR PROGRESS	02-19-2021

SEAL

STATE OF NEW YORK · JOHN TORRE · LICENSED PROFESSIONAL ENGINEER · 071678

PROJECT

LIBERTY PLAZA SUITES
500 COMMERCE ST.
TOWN OF MT. PLEASANT, NY

DATE:	AUGUST 12, 2020
PROJECT NO:	NDIM0001.00
DRAWN BY:	HLD
CHECKED BY:	RJ
SCALE:	AS NOTED

DRAWING TITLE

PLUMBING SANITARY RISER DIAGRAMS 2 OF 2

SHEET NO.

P5.2

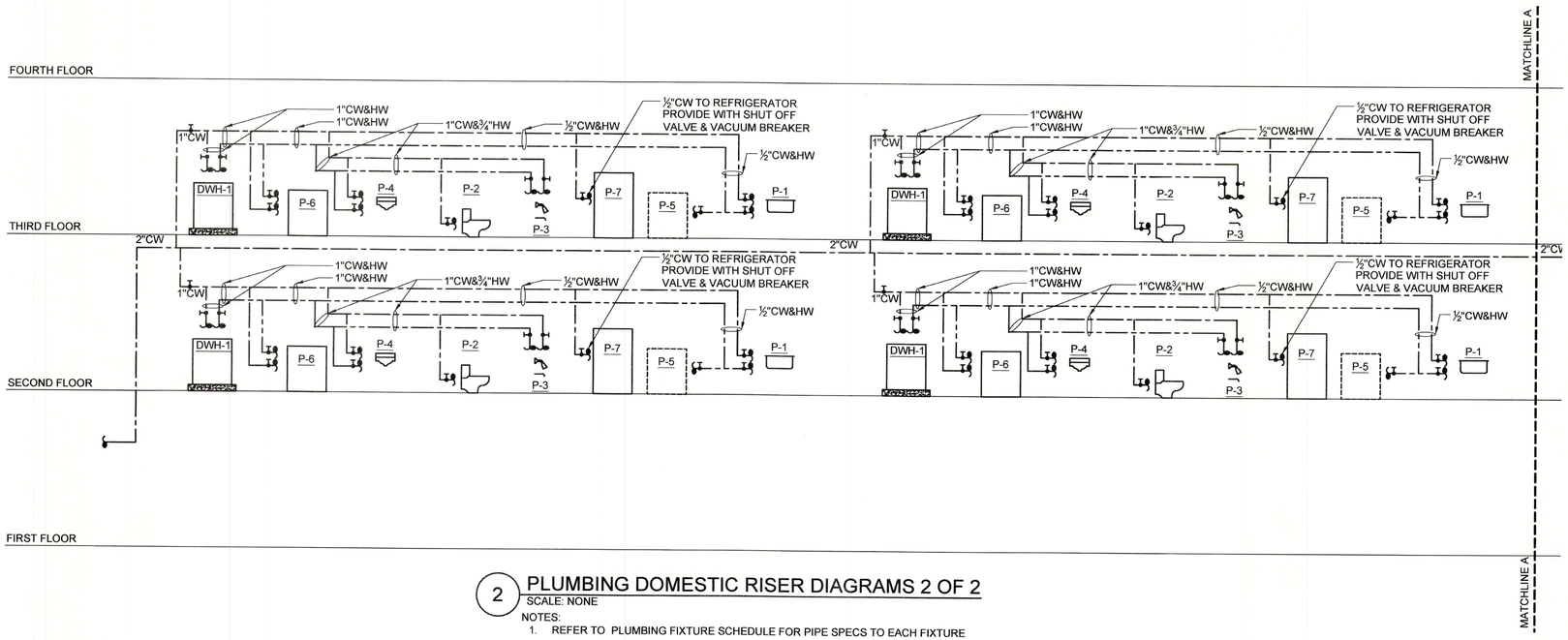

2 PLUMBING DOMESTIC RISER DIAGRAMS 2 OF 2

SCALE: NONE

NOTES:

1. REFER TO PLUMBING FIXTURE SCHEDULE FOR PIPE SPECS TO EACH FIXTURE

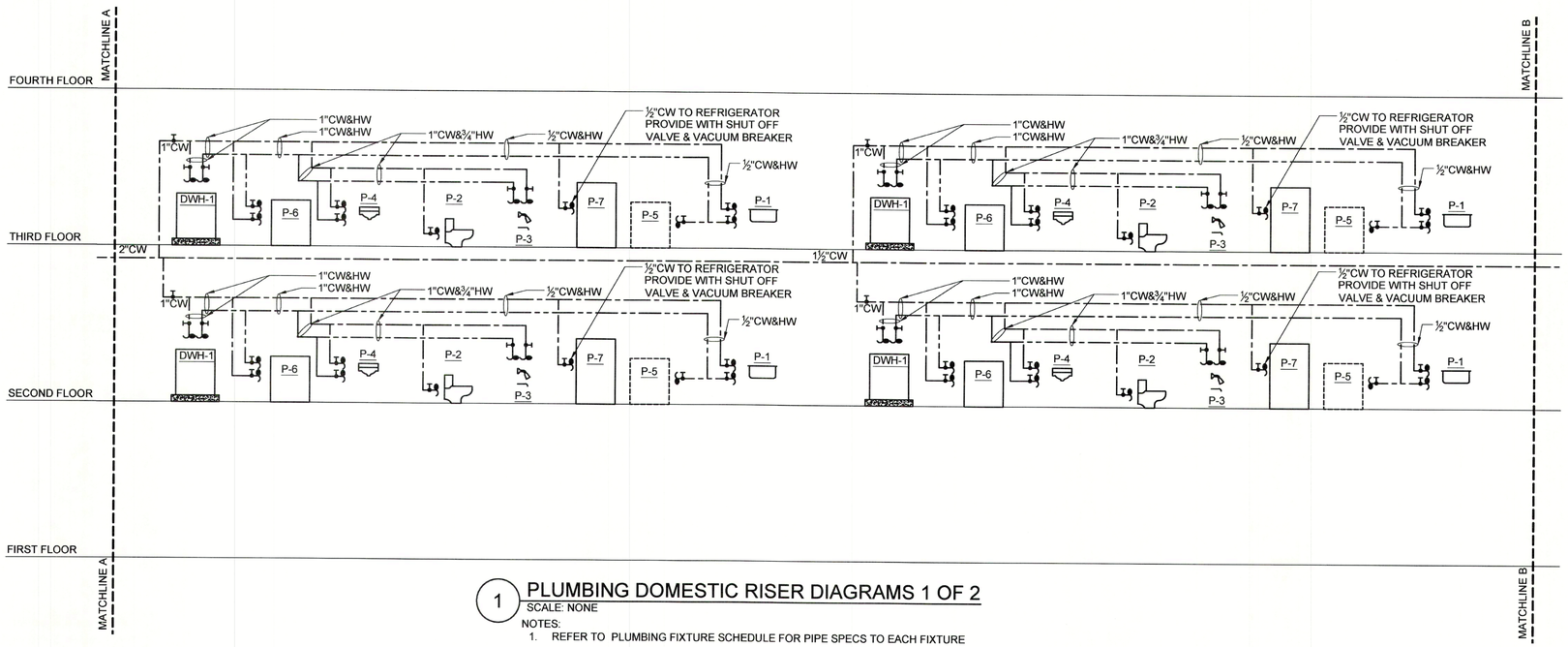

1 PLUMBING DOMESTIC RISER DIAGRAMS 1 OF 2

SCALE: NONE

NOTES:

1. REFER TO PLUMBING FIXTURE SCHEDULE FOR PIPE SPECS TO EACH FIXTURE

LIBERTY PLAZA SUITES

500 COMMERCE STREET
HAWTHORNE, NY 10532

ARCHITECT

dimovski architecture p.c.
59 Kensico Road, Thornwood, NY 10594
(914) 747-3500 | (914) 747-3588 fax
www.dimovskiarchitecture.com

STRUCTURAL ENGINEER

CHARLES A. MANGANARO
CONSULTING ENGINEERS
A PROFESSIONAL CORPORATION
303 SOUTH BROADWAY, SUITE 223, TARRYTOWN, NY 10591-5488
SHAILESH R. NAIK, P.E.
NEW YORK LICENSE No. 072797-1

MEP ENGINEER

OLA Consulting Engineers
50 Broadway,
Hawthorne, NY 10532
914.747.2800
8 West 38th Street,
Suite 501
New York, NY 10018
646.848.4110
olace.com

NO.	REVISION/ISSUE	DATE
3	ISSUED FOR PERMIT	03-12-2021
2	ISSUED FOR PROGRESS 90%	03-05-2021
1.	ISSUED FOR PROGRESS	02-19-2021

SEAL

STATE OF NEW YORK · JOHN TOMKE · LICENSED PROFESSIONAL ENGINEER · 071676

PROJECT

LIBERTY PLAZA SUITES
500 COMMERCE ST.
TOWN OF MT. PLEASANT, NY

DATE:	AUGUST 12, 2020
PROJECT NO:	NDIM0001.00
DRAWN BY:	HLD
CHECKED BY:	RJ
SCALE:	AS NOTED

DRAWING TITLE

PLUMBING DOMESTIC RISER DIAGRAMS 1 OF 2

SHEET NO.

P5.3

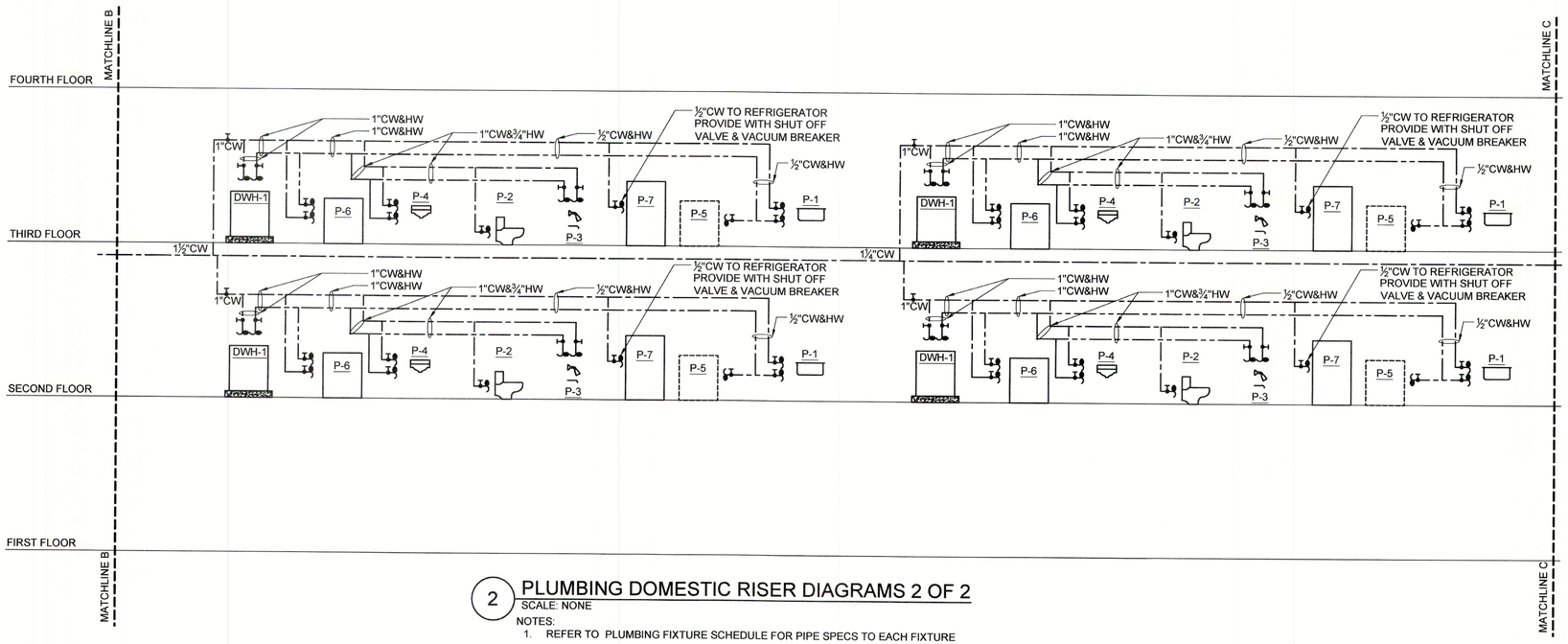

2 PLUMBING DOMESTIC RISER DIAGRAMS 2 OF 2

SCALE: NONE

NOTES:

1. REFER TO PLUMBING FIXTURE SCHEDULE FOR PIPE SPECS TO EACH FIXTURE

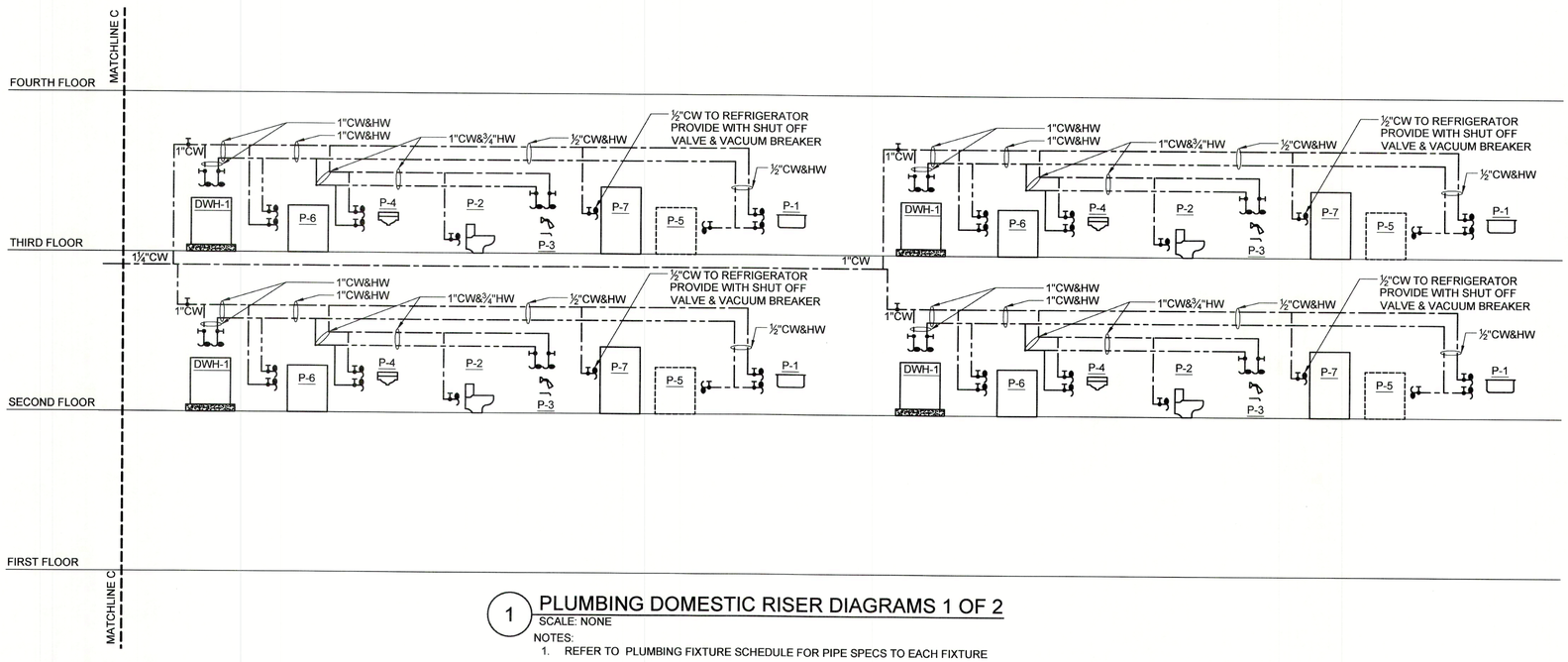

1 PLUMBING DOMESTIC RISER DIAGRAMS 1 OF 2

SCALE: NONE

NOTES:

1. REFER TO PLUMBING FIXTURE SCHEDULE FOR PIPE SPECS TO EACH FIXTURE

LIBERTY PLAZA SUITES

500 COMMERCE STREET
HAWTHORNE, NY 10532

ARCHITECT

dimovski architecture
59 Kensico Road, Thornwood, NY 10594
(914) 747-3500 | (914) 747-3588 fax
www.dimovskiarchitecture.com

STRUCTURAL ENGINEER

CHARLES A. MANGANARO CONSULTING ENGINEERS
A PROFESSIONAL CORPORATION
303 SOUTH BROADWAY, SUITE 223, TARRYTOWN, NY 10591-5488

SHAILESH R. NAIK, P.E.
NEW YORK LICENSE No. 072797-1

MEP ENGINEER

OLA Consulting Engineers
60 Broadway,
Hawthorne, NY 10532
914.747.2800
8 West 38th Street,
Suite 901
New York, NY 10018
646.849.4110
olace.com

NO.	REVISION/ISSUE	DATE
3	ISSUED FOR PERMIT	03-12-2021
2	ISSUED FOR PROGRESS 90%	03-05-2021
1.	ISSUED FOR PROGRESS	02-19-2021

SEAL

STATE OF NEW YORK • JOHN TORRE • LICENSED PROFESSIONAL ENGINEER • 071678

PROJECT

LIBERTY PLAZA SUITES
500 COMMERCE ST.
TOWN OF MT. PLEASANT, NY

DATE:	AUGUST 12, 2020
PROJECT NO:	NDIM0001.00
DRAWN BY:	HLD
CHECKED BY:	RJ
SCALE:	AS NOTED

DRAWING TITLE

PLUMBING DOMESTIC RISER DIAGRAMS 2 OF 2

SHEET NO.

P5.4

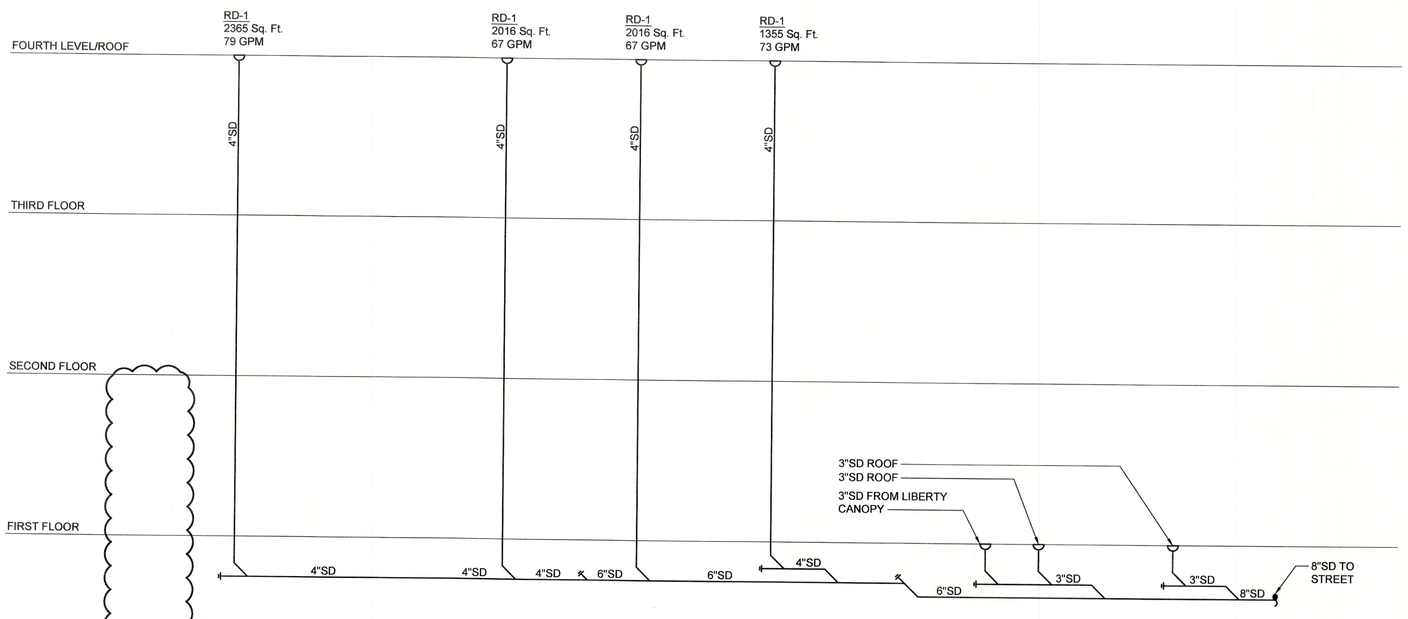

2 PLUMBING STORM RISER DIAGRAMS

SCALE: NONE

NOTES:

1. REFER TO PLUMBING FIXTURE SCHEDULE FOR PIPE SPECS TO EACH FIXTURE

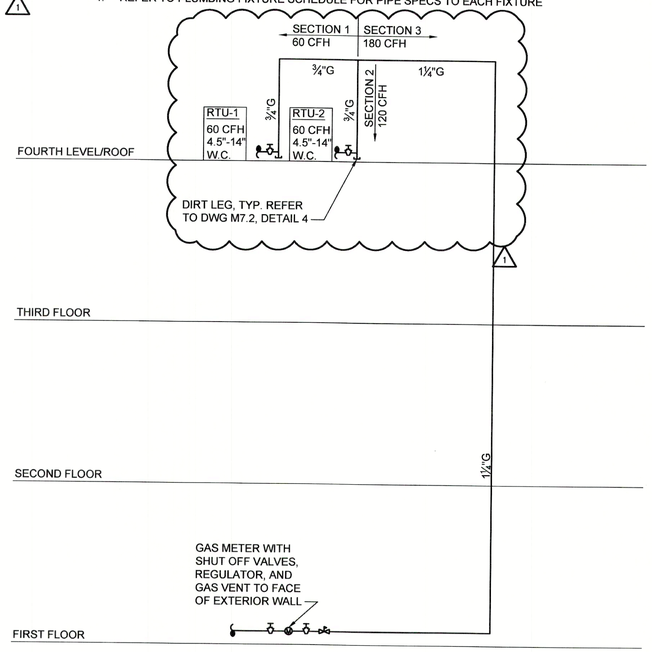

1 PLUMBING GAS RISER DIAGRAM

SCALE: NONE

NOTES:

1. REFER TO PLUMBING FIXTURE SCHEDULE FOR PIPE SPECS TO EACH FIXTURE

LIBERTY PLAZA SUITES

500 COMMERCE STREET
HAWTHORNE, NY 10532

ARCHITECT

dimovski architecture
59 Kensico Road, Thornwood, NY 10594
(914) 747-3500 | (914) 747-3588 fax
www.dimovskiarchitecture.com

STRUCTURAL ENGINEER

CHARLES A. MANGANARO
CONSULTING ENGINEERS
A PROFESSIONAL CORPORATION
303 SOUTH BROADWAY, SUITE 223, TARRYTOWN, NY 10591-5488

SHAILESH R. NAIK, P.E.
NEW YORK LICENSE No. 072797-1

MEP ENGINEER

OLA Consulting Engineers
60 Broadway,
Hawthorne, NY 10532
914.747.2800
8 West 38th Street,
Suite 501
New York, NY 10018
646.846.4110
olace.com

NO.	REVISION/ISSUE	DATE
1	DOB COMMENTS	04-26-2021
4	ISSUED FOR PRICING	03-16-2021
3	ISSUED FOR PERMIT	03-12-2021
2	ISSUED FOR PROGRESS 90%	03-05-2021
1.	ISSUED FOR PROGRESS	02-19-2021

SEAL

STATE OF NEW YORK
JOHN TORRE
071676
LICENSED PROFESSIONAL ENGINEER

PROJECT

LIBERTY PLAZA SUITES
500 COMMERCE ST.
TOWN OF MT. PLEASANT, NY

DATE:	AUGUST 12, 2020
PROJECT NO:	NDIM0001.00
DRAWN BY:	HLD
CHECKED BY:	RJ
SCALE:	AS NOTED

DRAWING TITLE

PLUMBING STORM AND GAS RISER DIAGRAMS

SHEET NO.

P5.5

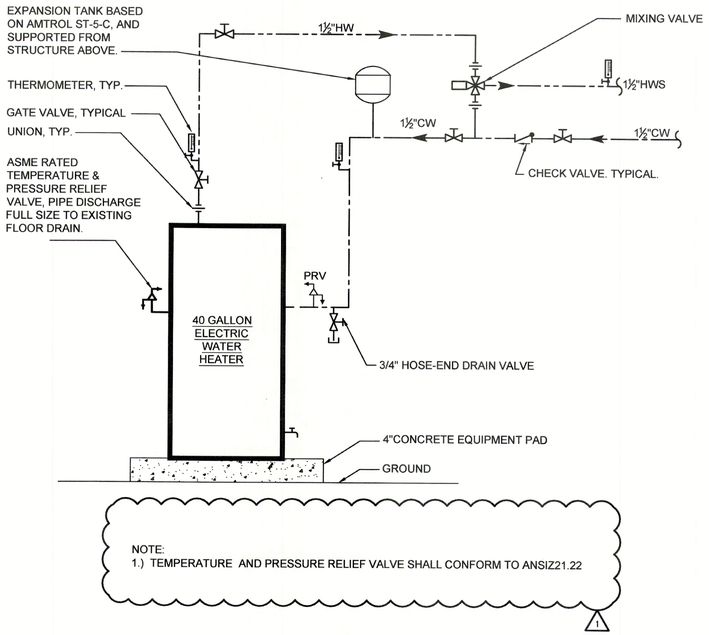

7 ELECTRIC HOT WATER HEATER DETAIL
SCALE: NONE

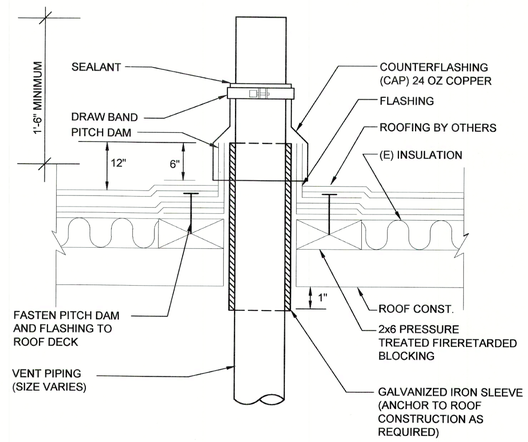

4 VENT THROUGH ROOF DETAIL
SCALE: NONE

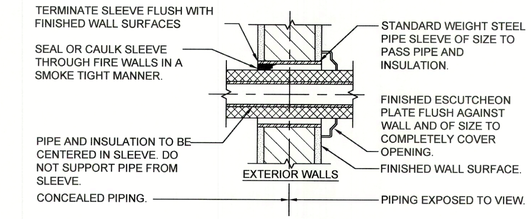

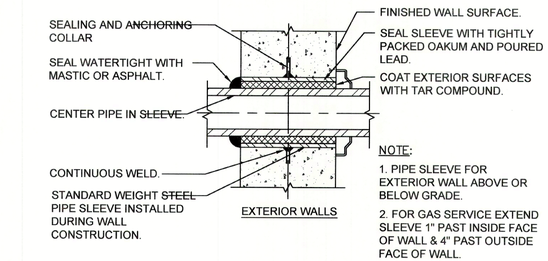

2 PIPE SLEEVES THROUGH WALL
SCALE: NONE

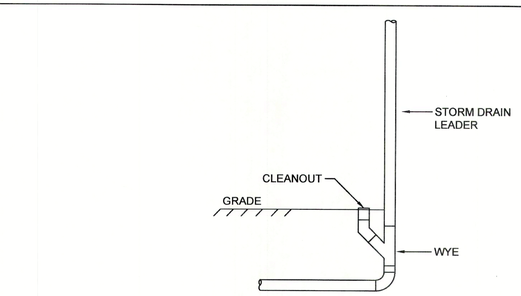

6 CLEANOUT FOR STORM LEADERS
SCALE: NONE

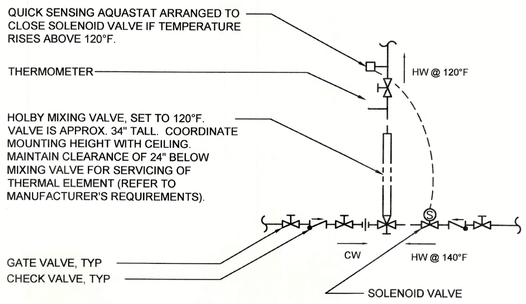

5 MIXING VALVE SCHEMATIC
SCALE: NONE

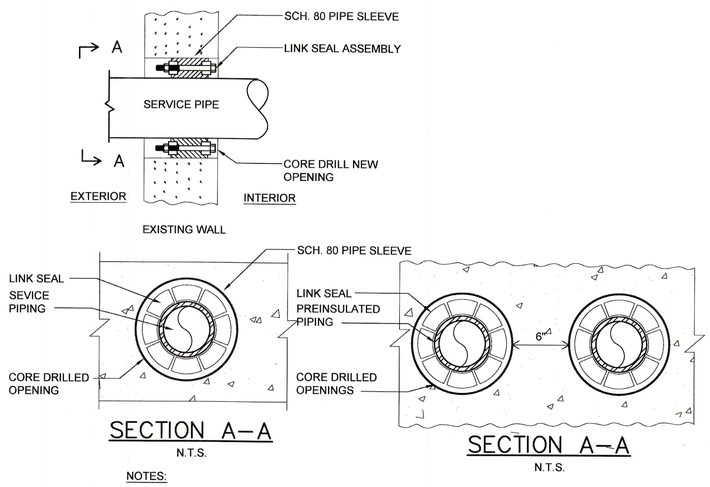

NOTES:

1. SEAL ASSEMBLY BASED ON THUNDERLINE MODEL "C" LINK-SEAL MODULAR SEAL, WITH EPDM SEAL ELEMENT, COMPOSITE PRESSURE PLATES, STEEL WITH 2-PART ZINC DICHROMATE & ORGANIC COATING NUTS AND BOLTS AND WITH A OPERATING TEMPERATURE RANGE OF -40°F TO +250°F.

3 LINK SEAL DETAIL
SCALE: NONE

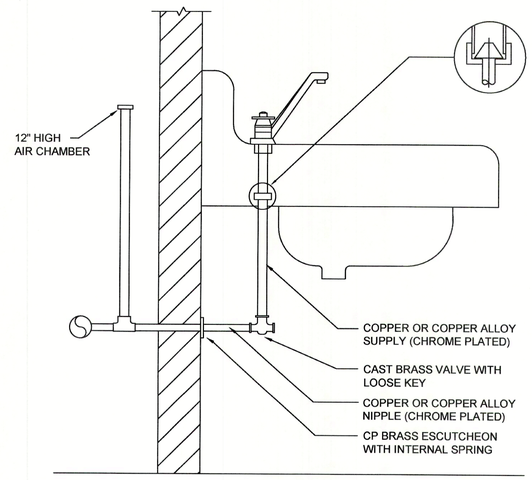

NOTE:
SIMILAR SUPPLY ARRANGEMENT TO OTHER FIXTURES

1 TYPICAL LAVATORY SUPPLY CONNECTION
SCALE: NONE

LIBERTY PLAZA SUITES

500 COMMERCE STREET
HAWTHORNE, NY 10532

ARCHITECT
dimovski architecture
59 Kensico Road, Thornwood, NY 10594
(914) 747-3500 | (914) 747-3588 fax
www.dimovskiarchitecture.com

STRUCTURAL ENGINEER
CHARLES A. MANGANARO
CONSULTING ENGINEERS
A PROFESSIONAL CORPORATION
303 SOUTH BROADWAY, SUITE 223, TARRYTOWN, NY 10591–5488
SHAILESH R. NAIK, P.E.
NEW YORK LICENSE No. 072797-1

MEP ENGINEER
OLA Consulting Engineers
60 Broadway,
Hawthorne, NY 10532
914.747.2800
8 West 38th Street,
Suite 501
New York, NY 10018
646.649.4110
olace.com

NO.	REVISION/ISSUE	DATE
1	DOB COMMENTS	04-26-2021
4	ISSUED FOR PRICING	03-16-2021
3	ISSUED FOR PERMIT	03-12-2021
2	ISSUED FOR PROGRESS 90%	03-05-2021
1.	ISSUED FOR PROGRESS	02-19-2021

SEAL
STATE OF NEW YORK · JOHN TOMEI · LICENSED PROFESSIONAL ENGINEER · 071678

PROJECT
LIBERTY PLAZA SUITES
500 COMMERCE ST.
TOWN OF MT. PLEASANT, NY

DATE:	AUGUST 12, 2020
PROJECT NO:	NDIM0001.00
DRAWN BY:	HLD
CHECKED BY:	RJ
SCALE:	AS NOTED

DRAWING TITLE
PLUMBING DETAILS
1 OF 2

SHEET NO.
P7.1

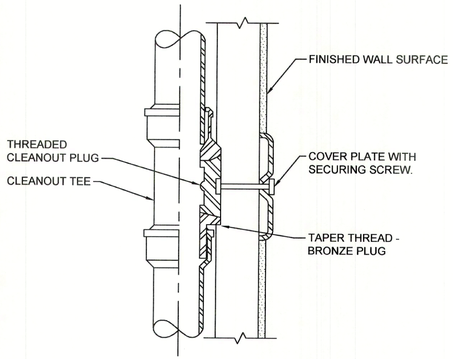

2 CLEANOUT CONCEALED BEHIND WALL DETAIL
SCALE: NONE

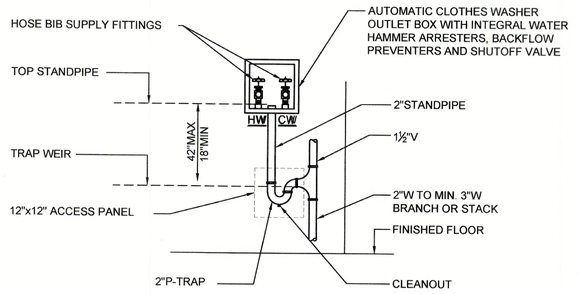

NOTES:
1. DETAILS APPLIES TO AUTOMATIC CLOTHES WASHERS WITHOUT INTEGRAL AIR GAP ON WATER SUPPLY CONNECTIONS. FOR AUTOMATIC CLOTHES WASHER WITH INTEGRAL AIR GAP DELETE BACKFLOW PREVENTERS IN OUTLET BOX.

4 RESIDENTIAL AUTOMATIC CLOTHES WASHER CONNECTION DETAIL
SCALE: NONE

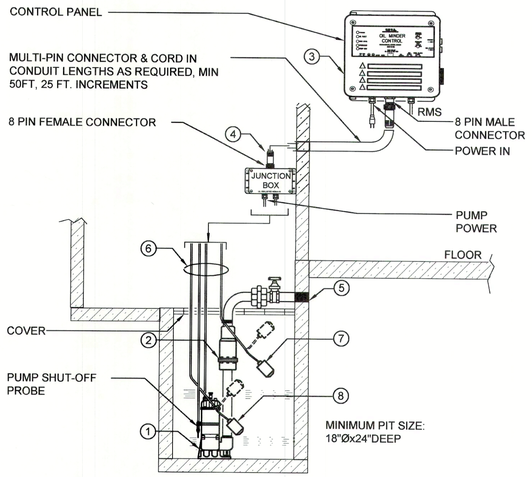

1.) STANCOR MODEL SE-40 SUBMERSIBLE EFFLUENT PUMP 1/2 HP, 115 VOLT, 3600 RPM, 2" DISCHARGE CONNECTION
2.) STANCOR CHECK VALVE
3.) STANCOR OIL MINDER 115V, 1Ø CONTROL SYSTEM WITH OPTIONAL BUILT IN AUDIBLE AND VISUAL ALARM WHEN PUMP DOES NOT RUN DUE TO OIL IN PIT OR HIGH LIQUID ALARM. PROVIDE SILENCING BUTTON FOR AUDIBLE ALARM BUILT INTO PANEL. PANEL SHALL HAVE ADDITIONAL CONTACT FOR A REMOTE ALARM LOCATION. A JUNCTION BOX WILL BE PROVIDED WITH MULTI-PIN CONNECTOR & CORD IN LENGTHS AS REQUIRED, 25 FT. IS STANDARD, OPTIONAL 25 FT. INCREMENTS. LIGHTS FOR OIL SPILL, POWER,HIGH LIQUID LEVEL, OVERLOAD & PUMP RUN
4.) JUNCTION BOX WILL BE PROVIDED WITH MULTI-PIN CONNECTOR AND CORD IN LENGTHS AS REQUIRED; 25 FT. IS STANDARD, OPTIONAL 25 FT. INCREMENTS AVAILABLE
5.) ALL BURIED PUMP PRESSURE DISCHARGE PIPING SHALL BE PROTECTED WITH TAPECOAT CT CORROSION PROTECTION TAPE
6.) OIL MINDER CABLE, POWER CABLE, PROBE CABLE, HIGH LIQUID ALARM CABLE & PUMP ON FLOAT CABLE.
7.) HIGH LIQUID ALARM FLOAT WITH CLAMP DEVICE TO MOUNT TO PUMP DISCHARGE PIPING
8.) PUMP ON FLOAT

5 ELEVATOR SUMP PUMP DETAIL
SCALE: NONE

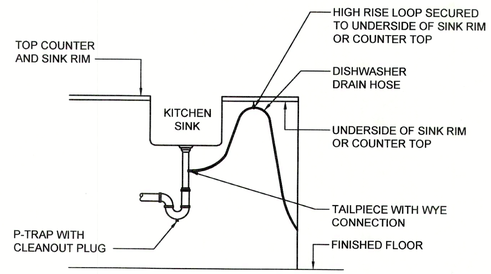

3 RESIDENTIAL DISHWASHER DRAIN CONNECTION
SCALE: NONE

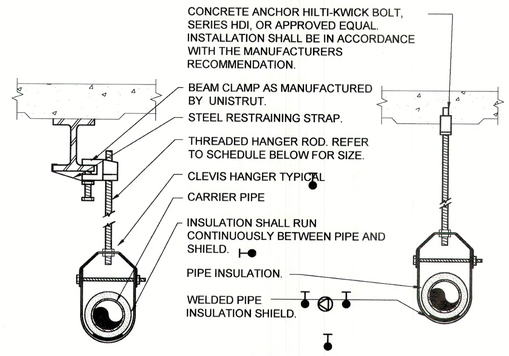

PIPE HANGER SCHEDULE					
PIPE DIA.	3/4"-2"	2 1/2"-3"	4"-5"	6"	8"-12"
HANGER DIA.	3/8"	1/2"	5/8"	3/4"	7/8"

NOTES:
1. CLEVIS HANGERS WITH WELDED INSULATION SHEILDS SIMILAR TO RAUCH FIG. 100SH ON ALL PIPES LARGER THAN 1".
2. FOR PIPES 1" OR SMALLER, A BAND HANGER WITH INSULATION SHEILD MAY BE USED SIMILAR TO RAUCH FIG. NO. 1ASH.
3. FOR NONINSULATED PIPE, INSULATION SHEILDS MAY BE OMITTED.
4. ALL PIPE HANGERS SHALL BE GALVANIZED STEEL OR FACTORY PAINTED BLACK WITH ENAMEL.
5. FOR NON FERROUS PIPING WITHOUT INSULATION, ALL HANGERS SHALL BE COPPER PLATED OR FURNISHED WITH A DI-ELECTRIC BETWEEN PIPE AND HANGERS.

1 PIPE HANGER DETAIL - CONCRETE & BEAM
SCALE: NONE

LIBERTY PLAZA SUITES

500 COMMERCE STREET
HAWTHORNE, NY 10532

ARCHITECT
dimovski architecture P.C.
59 Kensico Road, Thornwood, NY 10594
(914) 747-3500 | (914) 747-3588 fax
www.dimovskiarchitecture.com

STRUCTURAL ENGINEER
CHARLES A. MANGANARO CONSULTING ENGINEERS
A PROFESSIONAL CORPORATION
303 SOUTH BROADWAY, SUITE 223, TARRYTOWN, NY 10591-5488
SHAILESH R. NAIK, P.E.
NEW YORK LICENSE No. 072797-1

MEP ENGINEER
OLA Consulting Engineers
60 Broadway, Hawthorne, NY 10532
914.747.2800
9 West 38th Street, Suite 901, New York, NY 10018
646.649.4110
olace.com

NO.	REVISION/ISSUE	DATE
3	ISSUED FOR PERMIT	03-12-2021
2	ISSUED FOR PROGRESS 90%	03-05-2021
1.	ISSUED FOR PROGRESS	02-19-2021

SEAL
STATE OF NEW YORK JOHN TORRE LICENSED PROFESSIONAL ENGINEER 071678

PROJECT
LIBERTY PLAZA SUITES
500 COMMERCE ST.
TOWN OF MT. PLEASANT, NY

DATE:	AUGUST 12, 2020
PROJECT NO:	NDIM0001.00
DRAWN BY:	HLD
CHECKED BY:	RJ
SCALE:	AS NOTED

DRAWING TITLE
PLUMBING DETAILS 2 OF 2

SHEET NO.
P7.2