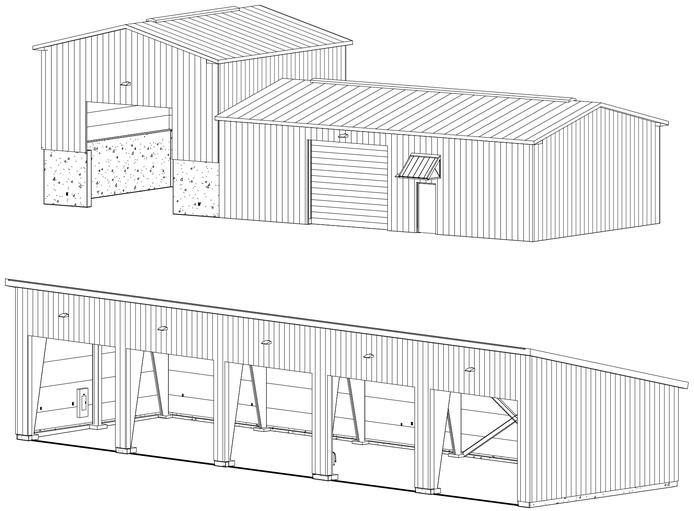

HUDSON VALLEY REGIONAL AIRPORT

C&S COMPANIES

CONTRACT DRAWINGS FOR THE CONSTRUCTION OF

AIRPORT SUPPORT BUILDINGS

HUDSON VALLEY REGIONAL AIRPORT

263 NEW HACKENSACK ROAD
WAPPINGERS FALLS, NY 12590

SEPTEMBER 2026

C&S PROJECT NUMBER: 128.065.001

DRAWING LIST

	GENERAL	
1 /30	GI-001	COVER SHEET
2 /30	GI-002	GENERAL NOTES, SURVEY CONTROL, AND LEGEND
3 /30	GC-101	GENERAL AND CONSTRUCTION SAFETY PHASING PLAN
4 /30	GC-102	CONSTRUCTION SAFETY AND PHASING PLAN
5 /30	CG-101	GRADING PLAN
6 /30	ES-101	ELECTRICAL SITE PLAN
7 /30	CG-501	DETAILS
8 /30	CG-502	DETAILS
	STRUCTURAL	
9 /30	S-001	GENERAL NOTES
10 /30	S-002	LOADING DIAGRAMS
11 /30	S-101	COLD STORAGE FOUNDATION AND SLAB PLAN
12 /30	S-102	SALT AND UREA STORAGE FOUNDATION AND SLAB PLAN
13 /30	S-103	SALT AND UREA STORAGE FRAMING PLAN
14 /30	S-501	TYPICAL DETAILS
15 /30	S-502	DETAILS
16 /30	S-503	DETAILS
17 /30	S-504	DETAILS
	ARCHITECTURAL	
19 /30	A-002	CODE CONFORMANCE PLAN
18 /30	A-001	SYMBOLS, ABBREVIATIONS, AND LEGENDS
20 /30	A-101	FLOOR PLAN - COLD STORAGE BUILDING
21 /30	A-102	FLOOR PLAN - SALT AND UREA STORAGE BUILDING
22 /30	A-201	ELEVATIONS - COLD STORAGE BUILDING
23 /30	A-202	ELEVATIONS - SALT AND UREA STORAGE BUILDING
24 /30	A-302	WALL SECTIONS
24 /30	A-303	WALL SECTIONS
26 /30	A-601	SCHEDULES AND DETAILS
	ELECTRICAL	
27 /30	E-001	SYMBOLS, GENERAL NOTES, ONE-LINE DIAGRAM
28 /30	E-101	SALT AND UREA STORAGE POWER AND LIGHTING PLAN
29 /30	E-102	COLD STORAGE POWER AND LIGHTING PLAN
30 /30	E-601	SCHEDULES AND DETAILS

PROJECT LOCATION

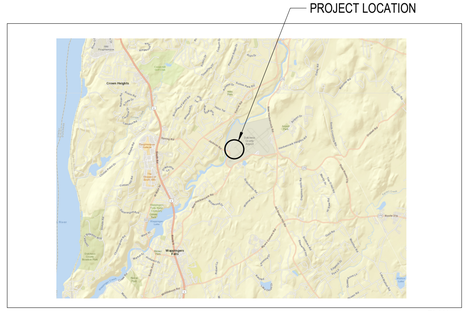

PLAN NORTH

LOCATION MAP

TO THE BEST OF OUR KNOWLEDGE, INFORMATION AND BELIEF THE PLANS AND SPECIFICATIONS FOR THIS PROJECT ARE IN COMPLIANCE WITH THE NEW YORK STATE ENERGY CONSERVATION CONSTRUCTION CODE AND THE BUILDING CODE OF NEW YORK STATE

NO ALTERATION PERMITTED HEREON EXCEPT AS PROVIDED UNDER SECTION 7209 SUBDIVISION 2 OF THE NEW YORK STATE EDUCATION LAW

GI-001

Copyright ©

100	KEYED NOTE REFERENCE
	EXISTING AIRPORT PROPERTY LINE
ROFA	EXISTING RUNWAY OBJECT FREE AREA
RSA	EXISTING RUNWAY SAFETY AREA
	EXISTING TAXIWAY OBJECT FREE AREA
TSA TSA	EXISTING TAXIWAY SAFETY AREA
	EXISTING EDGE OF WATER
	EXISTING EDGE OF WOODS
443	EXISTING CONTOUR LINE
	EXISTING SWALE CENTERLINE
	EXISTING TOP/BOTTOM OF DITCH
X	EXISTING FENCE LINE
	EXISTING SINGLE SWING GATE
	EXISTING DOUBLE SWING GATE
	EXISTING CANTILEVER GATE
	EXISTING GUIDE RAIL
24" RCP	EXISTING DRAINAGE LINE
6" UD UD	EXISTING UNDERDRAIN
CO	EXISTING UNDERDRAIN CLEANOUT
CB CB	EXISTING CATCH BASIN
DMH	EXISTING DRAINAGE MANHOLE
	EXISTING HEADWALL
	EXISTING PIPE END SECTION
6" W W	EXISTING WATER LINE
	EXISTING HYDRANT
WV	EXISTING WATER VALVE
12" SAN S	EXISTING SANITARY LINE
6" FM FM	EXISTING SANITARY FORCE MAIN
SMH	EXISTING SANITARY MANHOLE
E	EXISTING UNDERGROUND ELECTRIC LINE
UP	EXISTING UTILITY POLE
	EXISTING GUY WIRE AND ANCHOR
	EXISTING POLE SUPPORT
	EXISTING CONCRETE MARKER
D	EXISTING CONCRETE DUCT MARKER
C	EXISTING CONCRETE CABLE MARKER
S	EXISTING CONCRETE SPLICE MARKER
	EXISTING TIE-DOWN

	EXISTING REIL UNIT
	EXISTING ELECTRICAL DISCONNECT
	EXISTING TRANSFORMER
	EXISTING WIND CONE
	EXISTING LIGHTED WIND CONE
EMH	EXISTING ELECTRICAL MANHOLE
PB	EXISTING PULLBOX
JC	EXISTING JUNCTION CAN
TWY A/2	EXISTING CIRCUIT LABEL
	EXISTING AIRFIELD LIGHTING CABLE IN TRENCH
	EXISTING AIRFIELD LIGHTING CABLE IN CONDUIT
4WDB	EXISTING DUCT BANK
CP-1	EXISTING SURVEY CONTROL POINT
BM	EXISTING BENCHMARK LOCATION
443.2	PROPOSED INTERMEDIATE CONTOUR LINE
X 443.2	PROPOSED SPOT ELEVATION
E	PROPOSED UNDERGROUND ELECTRIC LINE
	PROPOSED SINGLE POST TRAFFIC SIGN
EMH	PROPOSED ELECTRICAL MANHOLE
PB	PROPOSED PULLBOX
JC	PROPOSED JUNCTION CAN
RWY-14/2	PROPOSED AIRFIELD LIGHTING CABLE IN CONDUIT WITH CIRCUIT NUMBER AND NUMBER OF CABLES
RWY-14/2	PROPOSED AIRFIELD LIGHTING CABLE IN TRENCH WITH CIRCUIT NUMBER AND NUMBER OF CABLES
SD	PROPOSED STORM DRAIN INLET PROTECTION
A	BARRICADE LOCATION WITH WORK AREA DESIGNATION
	WORK AREA LIMITS
	FLAGPERSON OR GATE GUARD LOCATION

A1 LEGEND

SCALE: NOT TO SCALE

GENERAL CONSTRUCTION NOTES

1. THE CONTRACTOR'S ATTENTION IS DIRECTED TO SECTION 70-08, ATTACHMENT A - CONSTRUCTION SAFETY AND PHASING PLAN (CSPP) OF THE GENERAL PROVISIONS.
2. THESE DRAWINGS HAVE BEEN PREPARED, IN PART, BASED UPON RECORD DRAWINGS AND/OR CAD FILES FURNISHED BY OTHERS. WHILE THIS INFORMATION IS BELIEVED TO BE RELIABLE, THOSE UTILIZING THE INFORMATION ON THESE DRAWINGS ARE ADVISED TO OBTAIN INDEPENDENT VERIFICATION OF ITS ACCURACY BEFORE USING IT FOR ANY PURPOSE.
3. EXISTING UTILITIES WERE TAKEN FROM PLANS OF RECORD. THEY HAVE BEEN SHOWN TO THE EXTENT KNOWN AND ARE OFFERED IN GOOD FAITH SOLELY FOR INFORMATIONAL PURPOSES. THEY MAY NOT REFLECT ACTUAL LOCATIONS AND MAY NOT BE INCLUSIVE. IT IS THE CONTRACTOR'S RESPONSIBILITY TO LOCATE ALL UTILITIES PRIOR TO THE START OF CONSTRUCTION.
4. THE ACTUAL LOCATION AND ELEVATION OF ALL UTILITIES SHALL BE FIELD VERIFIED BY THE CONTRACTOR PRIOR TO THE START OF CONSTRUCTION.
5. IN THE EVENT OF CONTRACTOR DAMAGE TO EXISTING UTILITIES OR CABLES, THE ENGINEER AND OWNER SHALL BE NOTIFIED IMMEDIATELY.
6. THE CONTRACTOR SHALL REPAIR ALL DAMAGE TO UTILITIES OR CABLES CAUSED BY CONTRACTOR'S OPERATIONS, AS DIRECTED BY THE ENGINEER, IMMEDIATELY AND AT THE CONTRACTOR'S EXPENSE.
7. ALL AREAS DISTURBED AS A RESULT OF THE CONTRACTOR'S STAGING AND CONSTRUCTION OPERATIONS SHALL BE RESTORED EQUAL TO OR BETTER THAN ORIGINAL CONDITION AT THE CONTRACTOR'S EXPENSE.
8. ALL DIRT, DUST, STONES AND LOOSE DEBRIS SHALL BE CONTINUOUSLY REMOVED FROM ALL PAVED SURFACES DURING THIS CONTRACT.
9. THE CONTRACTOR SHALL RECONSTRUCT AND MAINTAIN ACCESS ROUTES USED TO ACCESS THE WORK AREAS.
10. PROPOSED ACCESS ROADS SHALL BE REMOVED UPON COMPLETION OF WORK AND THE AREA RESTORED TO ORIGINAL CONDITION.
11. TO THE EXTENT THAT WETLAND AREAS ARE KNOWN, THEY HAVE BEEN DEPICTED ON THE CONTRACT DRAWINGS.
12. THIS CONTRACT DOES NOT ALLOW FOR PRICE INCREASES DUE TO ESCALATION IN COST OF UNIT BID ITEMS. THE CONTRACTOR SHALL TAKE THIS INTO CONSIDERATION WHEN PREPARING UNIT PRICES FOR BID.
13. THE OWNER RESERVES THE RIGHT TO ELIMINATE ANY ITEMS OF THE CONTRACT AND PERFORM THESE ITEMS WITH ITS FORCES AND MATERIALS. IT IS ESTIMATED THAT UP TO 5% OF THE PROJECT MAY BE COMPLETED BY THE OWNER. THE ITEMS TO BE COMPLETED BY THE OWNER WILL BE SPECIFIED PRIOR TO AWARD.
14. THE CONTRACTOR SHALL BE AWARE THAT OTHER CONCURRENT PROJECTS MAY BE UNDER CONSTRUCTION ON THE AIRPORT, SPECIFICALLY, THE SKY HARBOR HANGAR DEVELOPMENT PROJECT AND THE RUNWAY 6-24 EDGE LIGHTING AND SIGNAGE PROJECT. IT WILL BE THE CONTRACTOR'S RESPONSIBILITY TO COORDINATE ACTIVITIES WITH THE OTHER CONTRACTORS ON THE AIRPORT. THE COST OF COORDINATION SHALL BE INCLUDED IN ITEM C-106.

GRADING AND EXCAVATION NOTES

15. PRIOR TO THE START OF CONSTRUCTION, THE CONTRACTOR SHALL STRIP AND STOCKPILE ALL MATERIAL SUITABLE FOR TOPSOILING.
16. SOILS AND GROUNDWATER SPOIL SHALL BE HANDLED IN ACCORDANCE WITH THE PROJECT DISPOSAL PLAN AND ATTACHMENT "B" TO SPEC. SECTION C-102.
17. TEMPORARY AIR AND WATER POLLUTION, SOIL EROSION AND SILTATION CONTROL WORK PERFORMED FOR PROTECTION OF CONSTRUCTION AREAS OUTSIDE THE CONSTRUCTION LIMITS, SUCH AS BORROW AREAS AND WASTE AREAS, HAUL ROADS, EQUIPMENT AND MATERIAL STORAGE SITES, AND TEMPORARY PLANT SITES, WILL NOT BE MEASURED AND PAID FOR DIRECTLY BUT SHALL BE CONSIDERED AS A SUBSIDIARY OBLIGATION OF THE CONTRACTOR.
18. TOPSOILING WILL BE CONSIDERED A NECESSARY AND INCIDENTAL PART OF THE WORK AND ITS COST SHALL BE CONSIDERED BY THE CONTRACTOR AND INCLUDED IN THE CONTRACT PRICE FOR THE PAY ITEMS OF WORK INVOLVED.
19. ALL SOIL EROSION AND SEDIMENT CONTROL DEVICES AND MATERIALS SHALL BE IN PLACE PRIOR TO BEGINNING EARTHWORK OPERATIONS AND SHALL BE MAINTAINED UNTIL THE NEW SLOPES ARE STABILIZED WITH SEEDING AND/OR SLOPE PROTECTION.

SURVEY NOTES

20. ALL ELEVATIONS REFER TO NAVD 88 VERTICAL DATUM. COORDINATES REFER NAD 83 HORIZONTAL DATUM.
21. THE PLANIMETRIC FEATURES AND ELEVATIONS SHOWN HEREON WERE COMPILED FROM FIELD SURVEY PERFORMED BY AUBERTINE & CURRIER DATED JUNE 2024.

ENVIRONMENTAL NOTES

22. WORKERS WHO WILL POTENTIALLY CONTACT SITE SOIL ARE TO EMPLOY LEVEL D PERSONAL PROTECTION EQUIPMENT (PPE).
23. SOIL EXCAVATED DURING CONSTRUCTION IS ELIGIBLE TO ON-SITE RE-USE WITHIN EMBANKMENT AREA IF IT DOES NOT EXHIBIT FIELD EVIDENCE OF CONTAMINATION (ODOR OR STAINING), AND IF IT EXHIBITS FAVORABLE ENGINEERING CHARACTERISTICS AS DETERMINED BY THE PROJECT ENGINEER. RE-USE OF IMPORT FILL FORM (WITH ATTACHED DATA FROM THE PCIR) AND SUBMIT THAT FORM TO THE DEC FOR APPROVAL PRIOR TO CONSTRUCTION.
24. ANY EXCESS EXCAVATED SOIL GENERATED THAT CANNOT BE USED ON SITE AS FILL SHOULD NOT BE REMOVED FROM THE SITE WITHOUT WASTE DISPOSAL TESTING. AFTER TESTING IT MUST BE DISPOSED OF IN ACCORDANCE WITH ITS WASTE CLASSIFICATION FROM TESTING (AT A PERMITTED FACILITY IF NECESSARY).
25. ALL IMPORTED SOIL (IF ANY) SHALL BE TESTED IN ACCORDANCE WITH DER-10 (PROVIDED FOR REFERENCE), AND A DEC REQUEST TO IMPORT FILL FORM MUST BE COMPLETED.
26. THE DEC SHALL BE PROVIDED NOTICE OF CONSTRUCTION START TEN (10) DAYS PRIOR TO SOIL DISTURBANCE.

B3 GENERAL NOTES

SCALE: NOT TO SCALE

POINT NAME	NORTHING	EASTING	ELEVATION	DESCRIPTION
CP-1	1,018,164.58	660,909.04	153.99	HVCP/PACS "ARP"
CP-17002	1,017,683.24	658,601.50	144.67	5/8" REBAR W/ CAP SET
CP-17004	1,017,696.22	658,901.61	145.69	5/8" REBAR W/ CAP SET
CP-17006	1,017,887.69	658,643.58	144.70	MAGNETIC NAIL SET
BM 1			146.05	HYDRANT BONNET BOLT
BM 2			144.53	NAIL SET CONCRETE PAD

NOTES:

1. SEE SHEET GC-101 FOR LOCATIONS.
2. THE TOPOGRAPHIC FEATURES SHOWN HEREON WERE COMPILED FROM FIELD SURVEY PERFORMED BY AUBERTINE AND CURRIER DATED JUNE 03 THROUGH JUNE 04, 2024.
3. THE HORIZONTAL DATUM FOR THIS SURVEY IS BASED ON NYS EAST ZONE NAD83(2011) NORTH AMERICAN DATUM (1983/2011).
4. THE VERTICAL DATUM FOR THIS SURVEY IS BASED ON THE NORTH AMERICAN VERTICAL DATUM OF 1988 (NAVD88).
5. ALL HORIZONTAL AND VERTICAL CONTROL IS REFERENCED TO PRIMARY AIRPORT CONTROL STATION (PACS) "ARP", WITH AN ELEVATION OF 153.99'.
6. THE UNIT OF MEASUREMENT FOR THIS PROJECT IS INTERNATIONAL FEET.

A4 SURVEY CONTROL

SCALE: NOT TO SCALE

C&S COMPANIES®

C&S Engineers, Inc.
499 Col. Eileen Collins Blvd.
Syracuse, New York 13212
Phone: 315-455-2000
Fax: 315-455-9667
www.cscos.com

CERTIFICATE OF AUTHORIZATION #: 0021365

STATE OF NEW YORK · JACK M. HLUDZIN · NO. 079017 · LICENSED PROFESSIONAL ENGINEER

REGISTRATION EXPIRATION: 9/30/2027

HUDSON VALLEY REGIONAL AIRPORT

AIRPORT SUPPORT BUILDINGS
HUDSON VALLEY REGIONAL AIRPORT
263 NEW HACKENSACK ROAD
WAPPINGERS FALLS, NY 12590

MARK	DATE	DESCRIPTION

REVISIONS

PROJECT NO:	128.056.001
DATE:	SEPTEMBER 2026
DRAWN BY:	JWP
DESIGNED BY:	JWP
CHECKED BY:	PMH

NO ALTERATION PERMITTED HEREON EXCEPT AS PROVIDED UNDER SECTION 7209 SUBDIVISION 2 OF THE NEW YORK EDUCATION LAW

GENERAL NOTES, SURVEY CONTROL AND LEGEND

GI-002

SHEET 2 OF 30

Copyright ©

Aug 25, 2026 - 3:22pm
F:\Project\128 - Dutchess County\128056001 - Airport Support Buildings\Design\CADD\Sheet Files\128056001_CG-Series.dwg

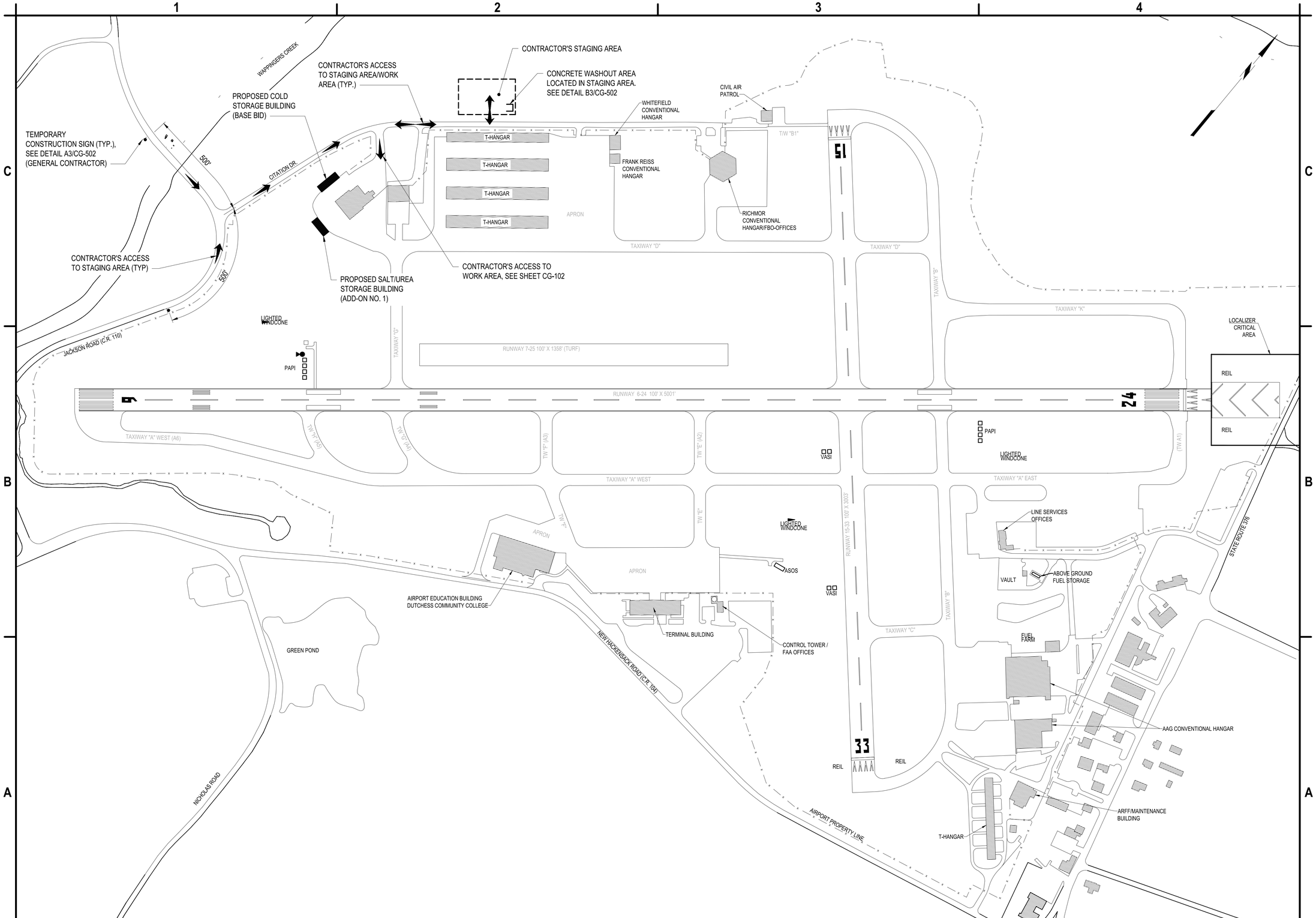

A1 CONSTRUCTION SAFETY AND PHASING PLAN

SCALE: 1" = 200'

200' 200 0 200 400FT.

C&S COMPANIES®

C&S Engineers, Inc.
499 Col. Eileen Collins Blvd.
Syracuse, New York 13212
Phone: 315-455-2000
Fax: 315-455-9667
www.cscos.com

CERTIFICATE OF AUTHORIZATION #: 0021365

STATE OF NEW YORK · JACK M. HLUDZIN · NO. 079017 · LICENSED PROFESSIONAL ENGINEER

REGISTRATION EXPIRATION: 9/30/2027

HUDSON VALLEY REGIONAL AIRPORT

AIRPORT SUPPORT BUILDINGS
HUDSON VALLEY REGIONAL AIRPORT
263 NEW HACKENSACK ROAD
WAPPINGERS FALLS, NY 12590

MARK	DATE	DESCRIPTION

REVISIONS

PROJECT NO:	128.056.001
DATE:	SEPTEMBER 2026
DRAWN BY:	JWP
DESIGNED BY:	JWP
CHECKED BY:	PMH

NO ALTERATION PERMITTED HEREON EXCEPT AS PROVIDED UNDER SECTION 7209 SUBDIVISION 2 OF THE NEW YORK EDUCATION LAW

GENERAL AND CONSTRUCTION SAFETY AND PHASING PLAN

GC-101

SHEET 3 OF 30

Copyright ©

Aug 25, 2026, 3:22pm
F:\Project\128 - Dutchess County\128056001 - Airport Support Buildings\Design\CADD\Sheet Files\128056001_CG-Series.dwg

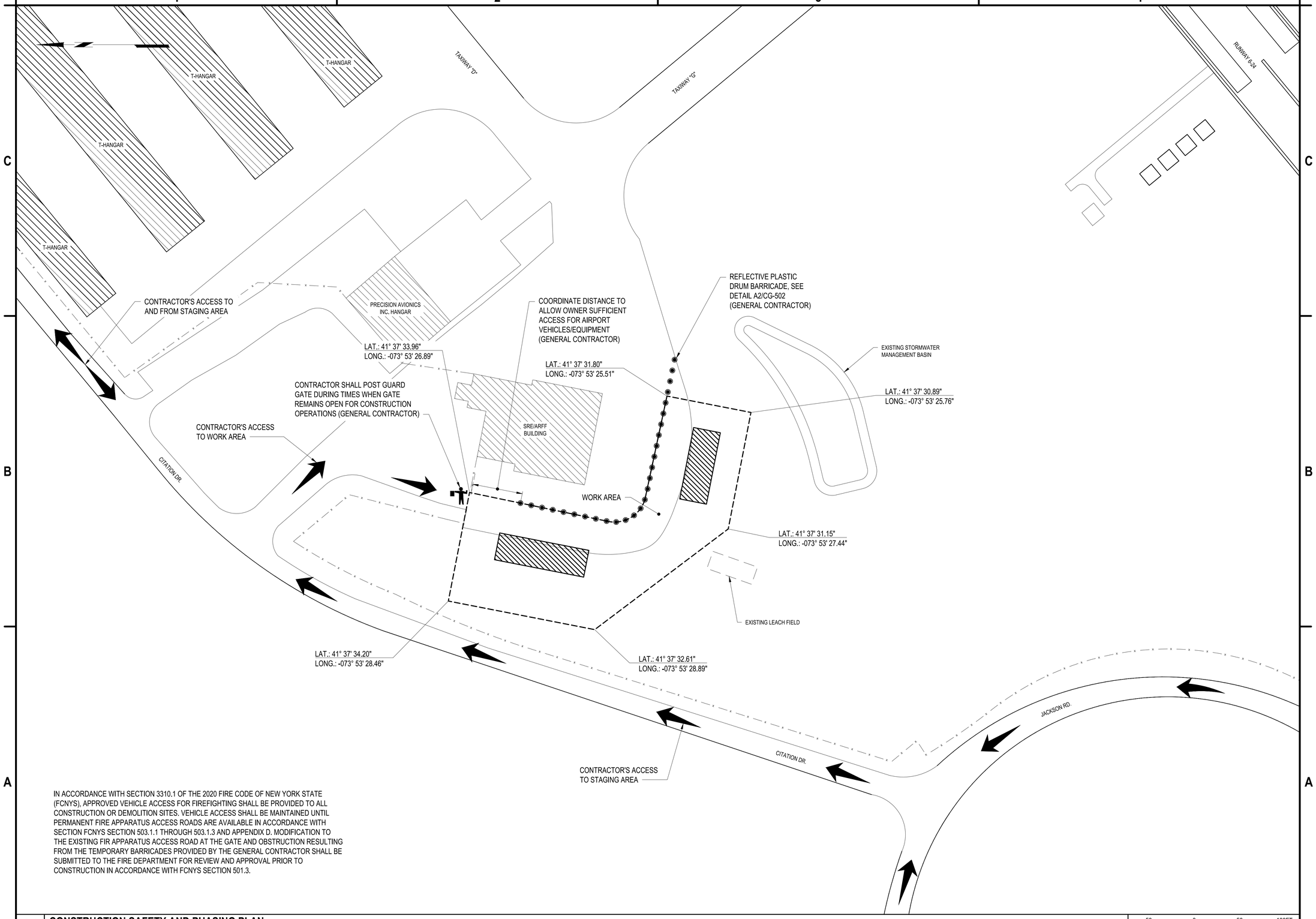

IN ACCORDANCE WITH SECTION 3310.1 OF THE 2020 FIRE CODE OF NEW YORK STATE (FCNYS), APPROVED VEHICLE ACCESS FOR FIREFIGHTING SHALL BE PROVIDED TO ALL CONSTRUCTION OR DEMOLITION SITES. VEHICLE ACCESS SHALL BE MAINTAINED UNTIL PERMANENT FIRE APPARATUS ACCESS ROADS ARE AVAILABLE IN ACCORDANCE WITH SECTION FCNYS SECTION 503.1.1 THROUGH 503.1.3 AND APPENDIX D. MODIFICATION TO THE EXISTING FIR APPARATUS ACCESS ROAD AT THE GATE AND OBSTRUCTION RESULTING FROM THE TEMPORARY BARRICADES PROVIDED BY THE GENERAL CONTRACTOR SHALL BE SUBMITTED TO THE FIRE DEPARTMENT FOR REVIEW AND APPROVAL PRIOR TO CONSTRUCTION IN ACCORDANCE WITH FCNYS SECTION 501.3.

A1 **CONSTRUCTION SAFETY AND PHASING PLAN**
SCALE: 1" = 50'

50' 50 0 50 100FT.

C&S COMPANIES®
C&S Engineers, Inc.
499 Col. Eileen Collins Blvd.
Syracuse, New York 13212
Phone: 315-455-2000
Fax: 315-455-9667
www.cscos.com

CERTIFICATE OF AUTHORIZATION #: 0021365

STATE OF NEW YORK · JACK M. HLUDZIK · NO. 079017 · LICENSED PROFESSIONAL ENGINEER

REGISTRATION EXPIRATION: 9/30/2027

HUDSON VALLEY REGIONAL AIRPORT

AIRPORT SUPPORT BUILDINGS
HUDSON VALLEY REGIONAL AIRPORT
263 NEW HACKENSACK ROAD
WAPPINGERS FALLS, NY 12590

MARK	DATE	DESCRIPTION

REVISIONS

PROJECT NO:	128.056.001
DATE:	SEPTEMBER 2026
DRAWN BY:	JWP
DESIGNED BY:	JWP
CHECKED BY:	PMH

NO ALTERATION PERMITTED HEREON EXCEPT AS PROVIDED UNDER SECTION 7209 SUBDIVISION 2 OF THE NEW YORK EDUCATION LAW

CONSTRUCTION SAFETY AND PHASING PLAN

GC-102

SHEET 4 OF 30

Copyright ©

Aug 25, 2026 - 3:22pm
F:\Project\128 - Dutchess County\128056501 - Airport Support Buildings\Design\CADD\Sheet Files\128056501_CG-Series.dwg

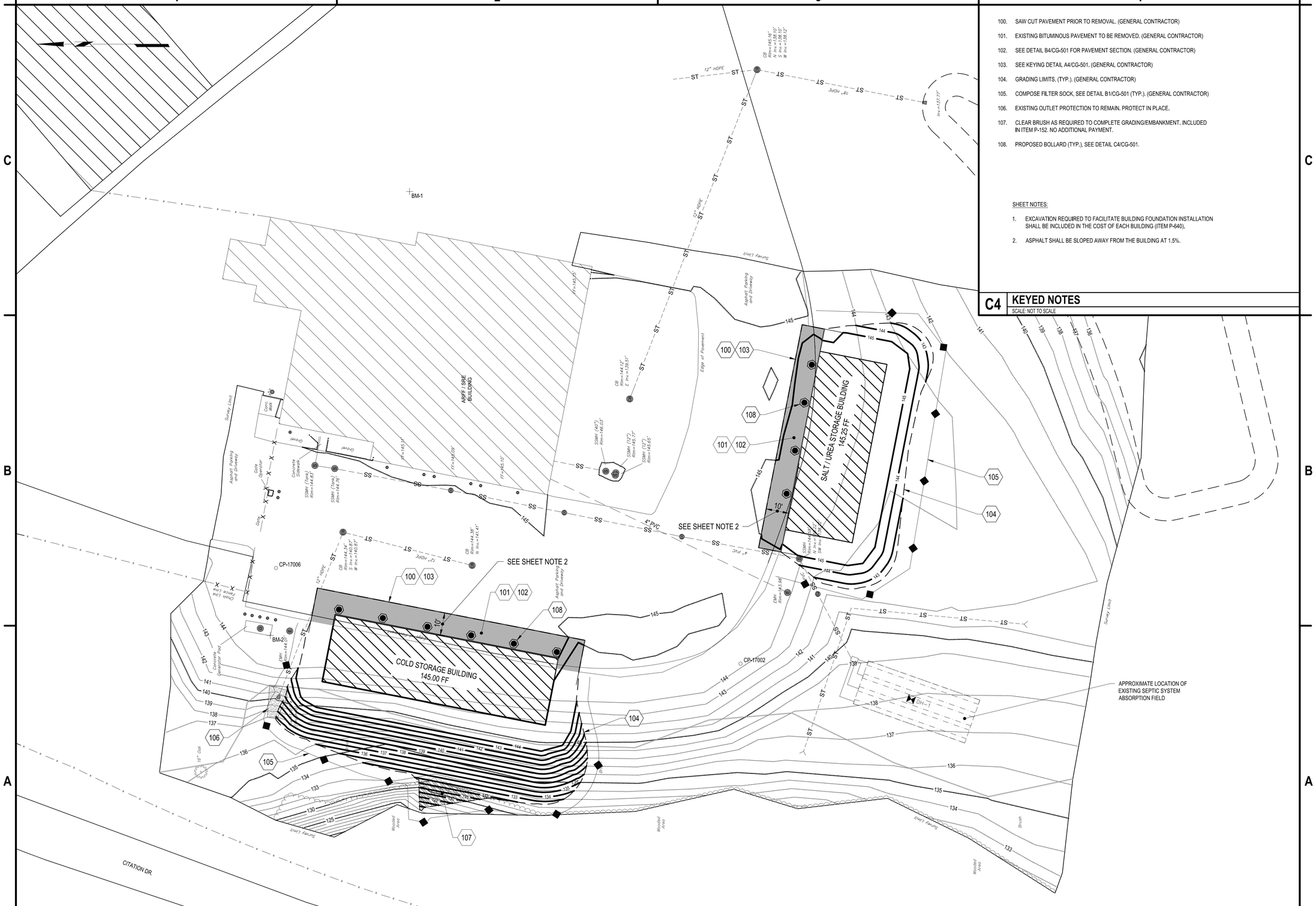

100. SAW CUT PAVEMENT PRIOR TO REMOVAL. (GENERAL CONTRACTOR)

101. EXISTING BITUMINOUS PAVEMENT TO BE REMOVED. (GENERAL CONTRACTOR)

102. SEE DETAIL B4/CG-501 FOR PAVEMENT SECTION. (GENERAL CONTRACTOR)

103. SEE KEYING DETAIL A4/CG-501. (GENERAL CONTRACTOR)

104. GRADING LIMITS, (TYP.). (GENERAL CONTRACTOR)

105. COMPOSE FILTER SOCK, SEE DETAIL B1/CG-501 (TYP.). (GENERAL CONTRACTOR)

106. EXISTING OUTLET PROTECTION TO REMAIN. PROTECT IN PLACE.

107. CLEAR BRUSH AS REQUIRED TO COMPLETE GRADING/EMBANKMENT. INCLUDED IN ITEM P-152. NO ADDITIONAL PAYMENT.

108. PROPOSED BOLLARD (TYP.), SEE DETAIL C4/CG-501.

SHEET NOTES:

1. EXCAVATION REQUIRED TO FACILITATE BUILDING FOUNDATION INSTALLATION SHALL BE INCLUDED IN THE COST OF EACH BUILDING (ITEM P-640).

2. ASPHALT SHALL BE SLOPED AWAY FROM THE BUILDING AT 1.5%.

C4 KEYED NOTES

SCALE: NOT TO SCALE

A1 GRADING PLAN

SCALE: 1" = 20'

20' 20 0 20 40FT.

C&S COMPANIES®

C&S Engineers, Inc.
499 Col. Eileen Collins Blvd.
Syracuse, New York 13212
Phone: 315-455-2000
Fax: 315-455-9667
www.cscos.com

CERTIFICATE OF AUTHORIZATION #: 0021365

STATE OF NEW YORK · JACK M. HLUDZIAK · NO. 079017 · LICENSED PROFESSIONAL ENGINEER

REGISTRATION EXPIRATION: 9/30/2027

HUDSON VALLEY REGIONAL AIRPORT

AIRPORT SUPPORT BUILDINGS
HUDSON VALLEY REGIONAL AIRPORT
263 NEW HACKENSACK ROAD
WAPPINGERS FALLS, NY 12590

MARK	DATE	DESCRIPTION

REVISIONS

PROJECT NO:	128.056.001
DATE:	SEPTEMBER 2026
DRAWN BY:	JWP
DESIGNED BY:	JWP
CHECKED BY:	PMH

NO ALTERATION PERMITTED HEREON EXCEPT AS PROVIDED UNDER SECTION 7209 SUBDIVISION 2 OF THE NEW YORK EDUCATION LAW

GRADING PLAN

CG-101

SHEET 5 OF 30

Copyright ©

Aug 25, 2026 - 3:27pm
F:\Project\128 - Dutchess County\128056001 - Airport Support Buildings\Design\CADD\Sheet Files\128056001_CG-Series.dwg

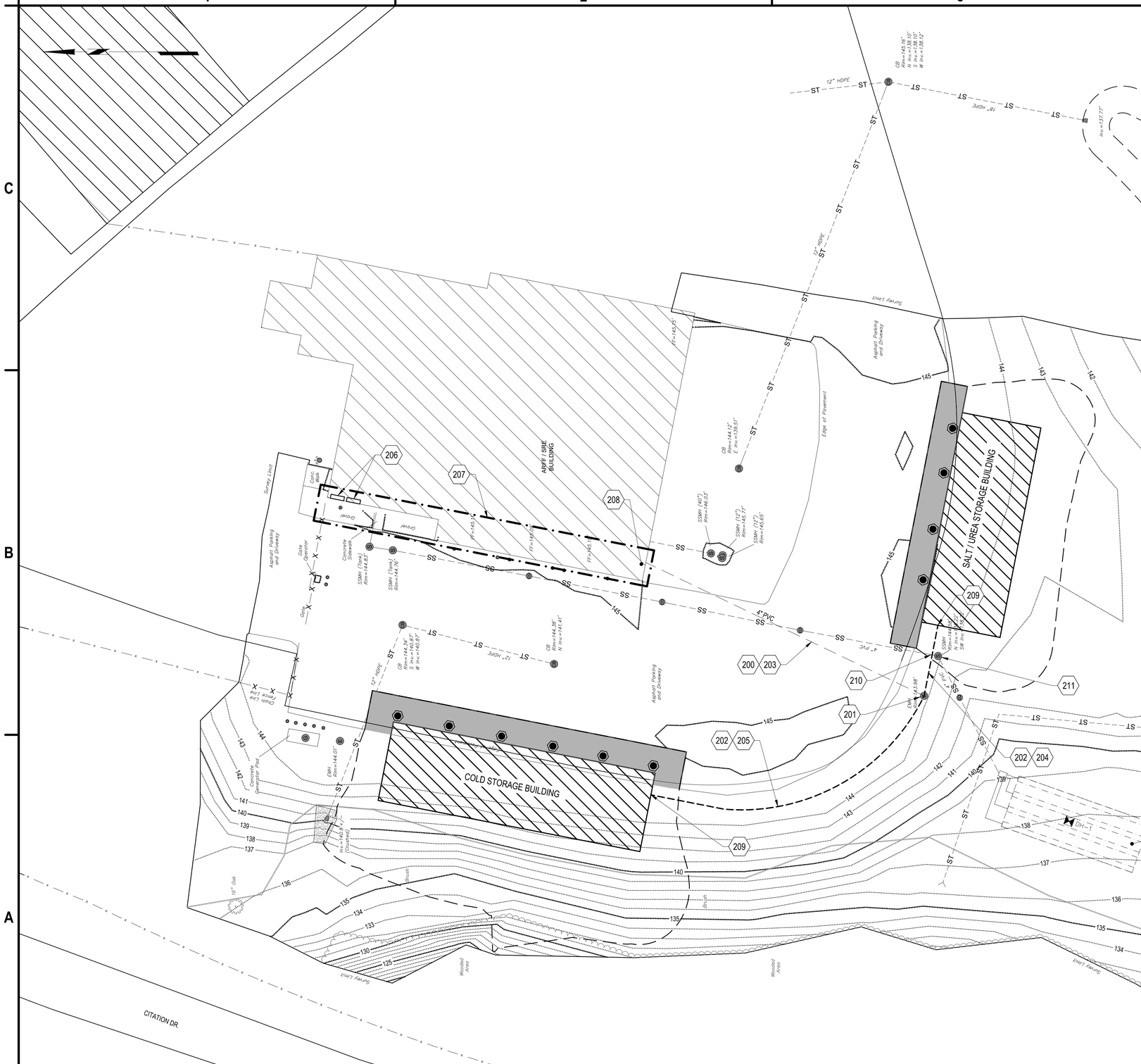

200. EXISTING ELECTRICAL CONDUIT TO BE USED. (ELECTRICAL CONTRACTOR)

201. EXISTING ELECTRICAL STRUCTURE TO BE USED. (ELECTRICAL CONTRACTOR)

202. PROPOSED ELECTRICAL CONDUIT, SEE DETAIL A1/CG-501. (GENERAL CONTRACTOR)

203. REFER TO ONE-LINE DIAGRAM FOR MORE INFORMATION . (ELECTRICAL CONTRACTOR)

204. REFER TO ONE-LINE DIAGRAM FOR MORE INFORMATION. (ELECTRICAL CONTRACTOR)

205. REFER TO ONE-LINE DIAGRAM A2/E-001 FOR MORE INFORMATION. (ELECTRICAL CONTRACTOR)

206. LOCATION OF EXISTING ELECTRICAL PANELS.

207. PROVIDE ALL CONDUIT AND CONDUCTORS TO MDP PANEL AND PANEL P1 IN ARFF / SRE BUILDING ELECTRICAL ROOM. REFER TO ONE-LINE DIAGRAM FOR MORE INFORMATION. CONTRACTOR SHALL COORDINATE ALL PULLBOX LOCATIONS AND CONDUIT ROUTING INSIDE THE ARFF / SRE BUILDING WITH OWNER PRIOR TO ROUGH-IN. (ELECTRICAL CONTRACTOR)

208. EXISTING CONDUIT STUB LOCATION. CONTRACTOR SHALL UTILIZE FOR PROPOSED BUILDING(S) POWER ROUTING. (ELECTRICAL CONTRACTOR)

209. CONDUIT ENTRANCE. SEE DETAIL B1/E-601. (ELECTRICAL CONTRACTOR)

210. EXISTING SANITARY LINE, PROTECT IN PLACE.

211. EXISTING SANITARY STRUCTURE, PROTECT IN PLACE.

C4 KEYED NOTES

SCALE: NOT TO SCALE

1. DEMARCATION POINT BETWEEN GC AND EC WORK IS 5' FROM FACE OF PROPOSED BUILDING(S) UNLESS OTHERWISE STATED OR SHOWN.

B4 SHEET NOTES

SCALE: NOT TO SCALE

A1 ELECTRICAL SITE PLAN

SCALE: 1" = 20'

20' 20 0 20 40FT.

C&S COMPANIES®

C&S Engineers, Inc.
499 Col. Eileen Collins Blvd.
Syracuse, New York 13212
Phone: 315-455-2000
Fax: 315-455-9667
www.cscos.com

CERTIFICATE OF AUTHORIZATION #: 0021365

STATE OF NEW YORK · JACK M. HLUDZIN · NO. 079017 · LICENSED PROFESSIONAL ENGINEER

REGISTRATION EXPIRATION: 9/30/2027

HUDSON VALLEY REGIONAL AIRPORT

AIRPORT SUPPORT BUILDINGS
HUDSON VALLEY REGIONAL AIRPORT
263 NEW HACKENSACK ROAD
WAPPINGERS FALLS, NY 12590

MARK	DATE	DESCRIPTION

REVISIONS

PROJECT NO:	128.056.001
DATE:	SEPTEMBER 2026
DRAWN BY:	JWP
DESIGNED BY:	JWP
CHECKED BY:	PMH

NO ALTERATION PERMITTED HEREON EXCEPT AS PROVIDED UNDER SECTION 7209 SUBDIVISION 2 OF THE NEW YORK EDUCATION LAW

ELECTRICAL SITE PLAN

ES-101

SHEET 6 OF 30

Copyright ©

Aug 25, 2026, 3:39pm
F:\Project\128 - Dutchess County\128056001 - Airport Support Buildings\Design\CADD\Sheet Files\128056001_CG-Series.dwg

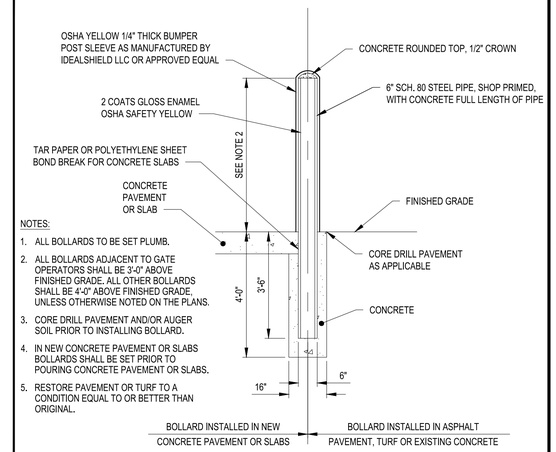

NOTES:

1. ALL BOLLARDS TO BE SET PLUMB.
2. ALL BOLLARDS ADJACENT TO GATE OPERATORS SHALL BE 3'-0" ABOVE FINISHED GRADE. ALL OTHER BOLLARDS SHALL BE 4'-0" ABOVE FINISHED GRADE, UNLESS OTHERWISE NOTED ON THE PLANS.
3. CORE DRILL PAVEMENT AND/OR AUGER SOIL PRIOR TO INSTALLING BOLLARD.
4. IN NEW CONCRETE PAVEMENT OR SLABS BOLLARDS SHALL BE SET PRIOR TO POURING CONCRETE PAVEMENT OR SLABS.
5. RESTORE PAVEMENT OR TURF TO A CONDITION EQUAL TO OR BETTER THAN ORIGINAL.

C4 TYPICAL BOLLARD DETAIL

SCALE: NOT TO SCALE

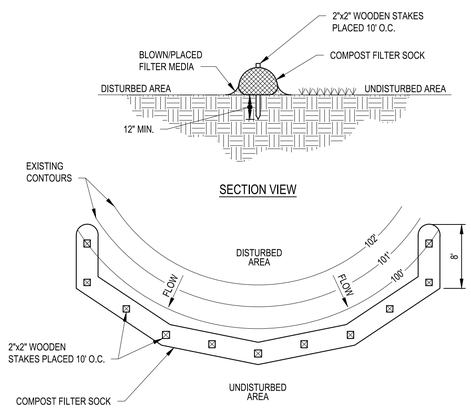

ADAPTED FROM DETAILS PROVIDED BY: FILTREXX

COMPOST STANDARDS TABLE	
ORGANIC MATTER CONTENT	25% - 100% (DRY WEIGHT)
ORGANIC PORTION	FIBROUS AND ELONGATED
PH	6.0 - 8.0
MOISTURE CONTENT	30% - 60%
PARTICLE SIZE	100% PASSING A 1" SCREEN 10-50% PASSING A 3/8" SCREEN
SOLUBLE SALT CONCENTATION	5.0 ds/M)mmhos/cm) MAX.

COMPOST FILTER SOCK NOTES:

1. SOCK FABRIC SHALL BE 5 MIL THICK CONTINUOUS HDPE OR POLYPROPYLENE, BIODEGRADABLE, OR PHOTODEGRADABLE FILAMENT, WOVEN INTO A TUBULAR MESH NETTING MATERIAL, WITH OPENINGS IN THE KNITTED MESH OF 3/8" (10MM) OR AS APPROVED BY THE RPR. COMPOST SHALL MEET THE STANDARDS LISTED ON COMPOST STANDARDS TABLE.
2. COMPOST FILTER SOCK SHALL BE PLACED AT EXISTING LEVEL GRADE. BOTH ENDS OF THE SOCK SHALL BE EXTENDED AT LEAST 8 FEET UP SLOPE AT 45° TO THE MAIN SOCK ALIGNMENT. MAXIMUM SLOPE LENGTH ABOVE ANY SOCK SHALL NOT EXCEED THAT SHOWN ON THE PLANS. STAKES MAY BE INSTALLED IMMEDIATELY DOWNSLOPE OF THE SOCK IF SO SPECIFIED BY THE MANUFACTURER.
3. TRAFFIC SHALL NOT BE PERMITTED TO CROSS FILTER SOCKS.
4. ACCUMULATED SEDIMENT SHALL BE REMOVED WHEN IT REACHES HALF THE ABOVE GROUND HEIGHT OF THE SOCK AND DISPOSED IN THE MANNER DESCRIBED ELSEWHERE IN THE PLAN.
5. SOCKS SHALL BE INSPECTED WEEKLY AND AFTER EACH RUNOFF EVENT. DAMAGED SOCKS SHALL BE REPAIRED ACCORDING TO MANUFACTURER'S SPECIFICATIONS OR REPLACED WITHIN 24 HOURS OF INSPECTION.
6. BIODEGRADABLE FILTER SOCKS SHALL BE REPLACED AFTER 6 MONTHS; PHOTODEGRADABLE SOCKS AFTER 1 YEAR. POLYPROPYLENE SOCKS SHALL BE REPLACED ACCORDING TO MANUFACTURER'S RECOMMENDATIONS.
7. UPON STABILIZATION OF THE AREA TRIBUTARY TO THE SOCKS, STAKES SHALL BE REMOVED. THE SOCK MAY BE LEFT IN PLACE AND VEGETATED OR REMOVED. IN THE LATTER CASE, THE MESH SHALL BE CUT OPEN AND THE MULCH SPREAD AS A SOIL SUPPLEMENT.

B1 COMPOST FILTER SOCK DETAIL (CS)

SCALE: NOT TO SCALE

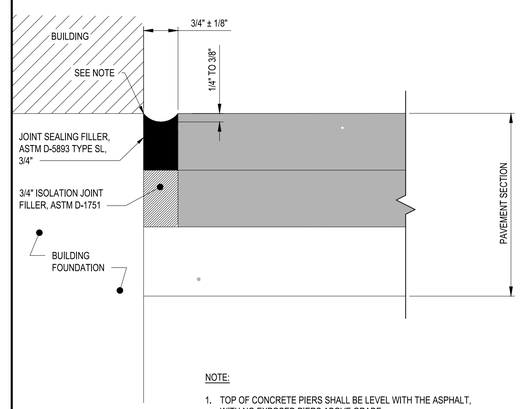

NOTE:

1. TOP OF CONCRETE PIERS SHALL BE LEVEL WITH THE ASPHALT, WITH NO EXPOSED PIERS ABOVE GRADE.

B3 ISOLATION JOINT AT FOUNDATION DETAIL

SCALE: NOT TO SCALE

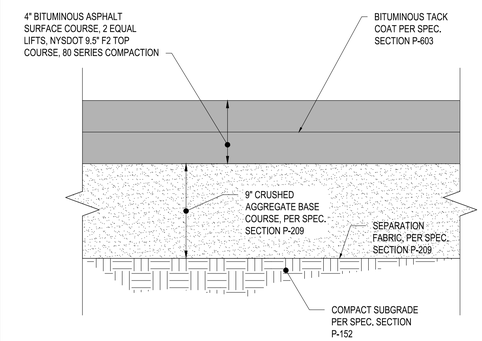

B4 PAVEMENT SECTION

SCALE: NOT TO SCALE

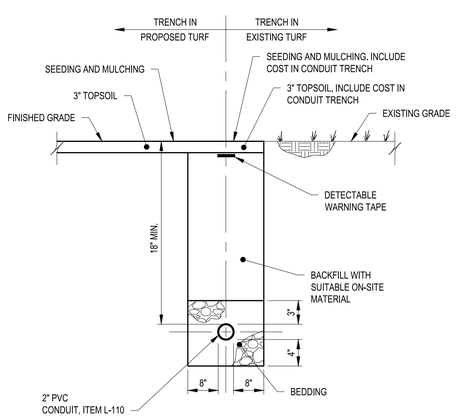

CONDUIT TRENCHING NOTES:

1. COUNTERPOISE WIRE SHALL ONLY BE INSTALLED IN CONDUIT TRENCHES WHERE THE CONDUIT RUN IS NOT PARALLEL WITH AND ADJACENT TO A PAVEMENT EDGE.
2. WHERE REQUIRED, ONE COUNTERPOISE WIRE SHALL BE PROVIDED FOR EVERY 2 CONDUITS OR INCREMENT THERE OF, PLACED IN A COMMON TRENCH. COUNTERPOISE WIRE SHALL BE PLACED PROPORTIONATELY ACROSS THE WIDTH OF CONDUITS.
3. DETECTABLE WARNING TAPE SHALL BE INSTALLED OVER EACH COUNTERPOISE WIRE PRIOR TO PLACING TOPSOIL.
4. PROVIDE 3" BETWEEN MULTIPLE CONDUITS IN A CONDUIT TRENCH. SEE LIGHTING PLANS FOR NUMBER OF CONDUITS PER TRENCH.
5. COUNTERPOISE WIRE SHALL BE CONNECTED TO A 5/8" DIA. x 8 FT LONG (MIN.) GROUND ROD EVERY 500 FT AND AT DUCT BANK ENDS AND CABLE CROSSINGS.ALL CONNECTIONS SHALL BE EXOTHERMIC.
6. THE CONTRACTOR SHALL RESTORE TRENCHED AREAS TO A CONDITION EQUAL TO OR BETTER THAN THE ORIGINAL SURFACE.

A1 CONDUIT TRENCHING DETAIL (IN TURF)

SCALE: NOT TO SCALE

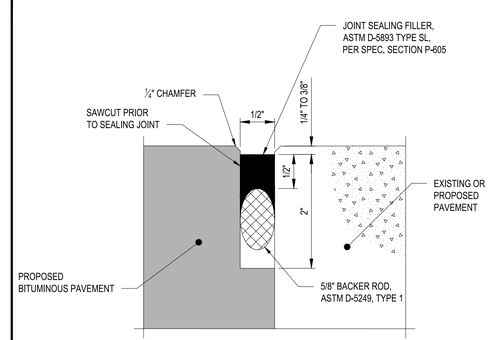

NOTE:

1. JOINT CONSTRUCTION IS CONSIDERED INCIDENTAL TO THIS CONTRACT AND NO DIRECT PAYMENT SHALL BE MADE.
2. SEALANT SHALL NOT BE HIGHER THAN BOTTOM OF CHAMGER.

A3 CONSTRUCTION JOINT SEALING DETAIL

SCALE: NOT TO SCALE

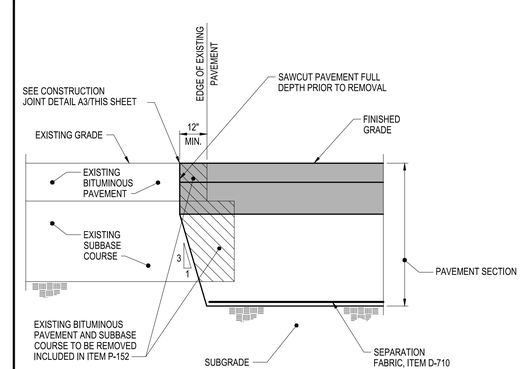

A4 KEYING DETAIL

SCALE: NOT TO SCALE

C&S COMPANIES®

C&S Engineers, Inc.
499 Col. Eileen Collins Blvd.
Syracuse, New York 13212
Phone: 315-455-2000
Fax: 315-455-9667
www.cscos.com

CERTIFICATE OF AUTHORIZATION #: 0021365

STATE OF NEW YORK · JACK M. HLUDZIK · NO. 079017 · LICENSED PROFESSIONAL ENGINEER

REGISTRATION EXPIRATION: 9/30/2027

HUDSON VALLEY REGIONAL AIRPORT

AIRPORT SUPPORT BUILDINGS
HUDSON VALLEY REGIONAL AIRPORT
263 NEW HACKENSACK ROAD
WAPPINGERS FALLS, NY 12590

MARK	DATE	DESCRIPTION

REVISIONS

PROJECT NO:	128.056.001
DATE:	SEPTEMBER 2026
DRAWN BY:	JWP
DESIGNED BY:	JWP
CHECKED BY:	PMH

NO ALTERATION PERMITTED HEREON EXCEPT AS PROVIDED UNDER SECTION 7209 SUBDIVISION 2 OF THE NEW YORK EDUCATION LAW

DETAILS

CG-501

SHEET 7 OF 30

Copyright ©

Aug 25, 2026 - 3:22pm
F:\Projects\128 - Dutchess County\128056001 - Airport Support Buildings\Design\CADD\Sheet Files\128056001_CG-Series.dwg

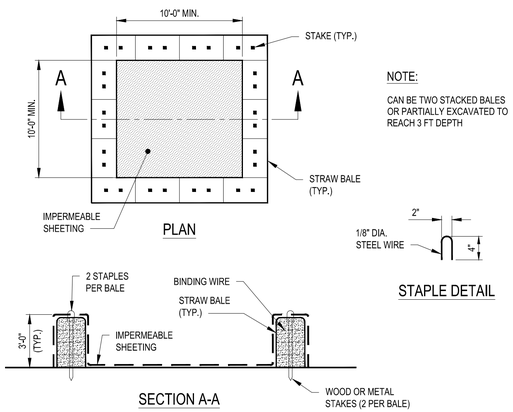

NOTE:

CAN BE TWO STACKED BALES OR PARTIALLY EXCAVATED TO REACH 3 FT DEPTH

CONSTRUCTION SPECIFICATIONS

1. LOCATE WASHOUT STRUCTURE A MINIMUM OF 50 FEET AWAY FROM OPEN CHANNELS, UNPROTECTED STORM DRAIN INLETS, SENSITIVE AREAS, WETLANDS, BUFFERS AND WATER COURSES AND AWAY FROM CONSTRUCTION TRAFFIC.
2. SIZE WASHOUT STRUCTURE FOR VOLUME NECESSARY TO CONTAIN WASH WATER AND SOLIDS AND MAINTAIN AT LEAST 4 INCHES OF FREEBOARD. TYPICAL DIMENSIONS ARE 10 FEET X 10 FEET X 3 FEET DEEP.
3. PREPARE SOIL BASE FREE OF ROCKS OR OTHER DEBRIS THAT MAY CAUSE TEARS OR HOLES IN THE LINER. FOR LINER, USE 10 MIL OR THICKER UV RESISTANT, IMPERMEABLE SHEETING, FREE OF HOLES AND TEARS OR OTHER DEFECTS THAT COMPROMISE IMPERMEABILITY OF THE MATERIAL.
4. PROVIDE A SIGN FOR THE WASHOUT IN CLOSE PROXIMITY TO THE FACILITY.
5. KEEP CONCRETE WASHOUT STRUCTURE WATER TIGHT. REPLACE IMPERMEABLE LINER IF DAMAGED (E.G., RIPPED OR PUNCTURED). EMPTY OR REPLACE WASHOUT STRUCTURE THAT IS 75 PERCENT FULL, AND DISPOSE OF ACCUMULATED MATERIAL PROPERLY. DO NOT REUSE PLASTIC LINER. WET-VACUUM STORED LIQUIDS THAT HAVE NOT EVAPORATED AND DISPOSE OF IN AN APPROVED MANNER.
6. PRIOR TO FORECASTED RAINSTORMS, REMOVE LIQUIDS OR COVER STRUCTURE TO PREVENT OVERFLOWS. REMOVE HARDENED SOLIDS, WHOLE OR BROKEN UP, FOR DISPOSAL OR RECYCLING. MAINTAIN RUNOFF DIVERSION AROUND EXCAVATED WASHOUT STRUCTURE UNTIL STRUCTURE IS REMOVED.
7. CONTRACTOR TO COORDINATE FINAL LOCATION OF CONCRETE WASHOUT WITH OWNER'S REPRESENTATIVE.
8. ALL MATERIALS REQUIRED FOR THIS ITEM SHALL BE INCIDENTAL TO ITEM C-102.

B3 TEMPORARY CONCRETE WASHOUT DETAIL

SCALE: NOT TO SCALE

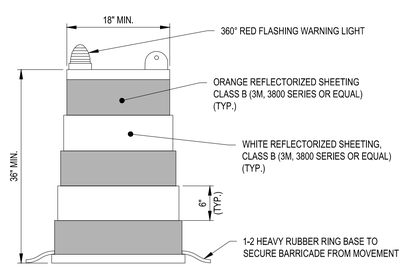

NOTE:

BARRICADES SHALL BE SPACED 8' MAX. O.C.

A2 PLASTIC DRUM BARRICADE DETAIL

SCALE: NOT TO SCALE

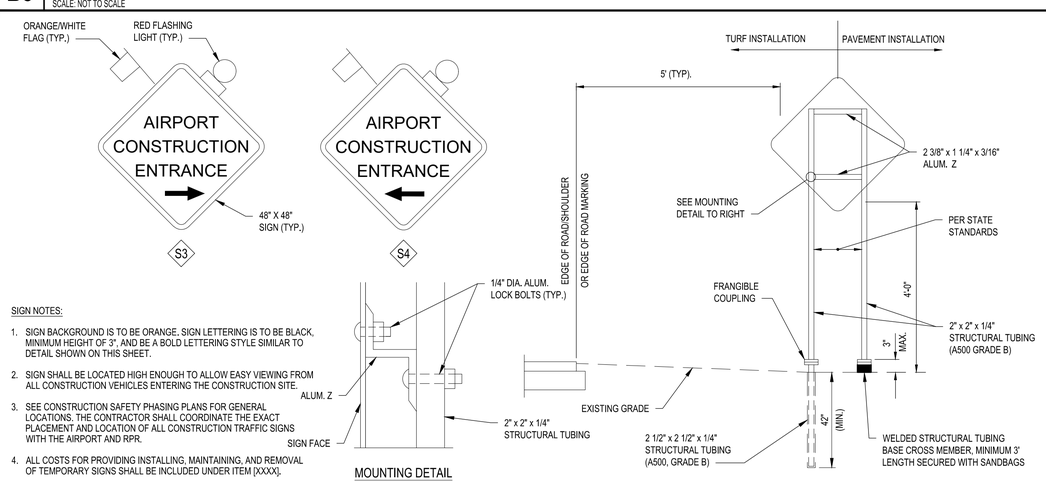

SIGN NOTES:

1. SIGN BACKGROUND IS TO BE ORANGE. SIGN LETTERING IS TO BE BLACK, MINIMUM HEIGHT OF 3", AND BE A BOLD LETTERING STYLE SIMILAR TO DETAIL SHOWN ON THIS SHEET.
2. SIGN SHALL BE LOCATED HIGH ENOUGH TO ALLOW EASY VIEWING FROM ALL CONSTRUCTION VEHICLES ENTERING THE CONSTRUCTION SITE.
3. SEE CONSTRUCTION SAFETY PHASING PLANS FOR GENERAL LOCATIONS. THE CONTRACTOR SHALL COORDINATE THE EXACT PLACEMENT AND LOCATION OF ALL CONSTRUCTION TRAFFIC SIGNS WITH THE AIRPORT AND RPR.
4. ALL COSTS FOR PROVIDING INSTALLING, MAINTAINING, AND REMOVAL OF TEMPORARY SIGNS SHALL BE INCLUDED UNDER ITEM [XXXX].

A3 TEMPORARY CONSTRUCTION SIGN DETAIL

SCALE: NOT TO SCALE

C&S COMPANIES®

C&S Engineers, Inc.
499 Col. Eileen Collins Blvd.
Syracuse, New York 13212
Phone: 315-455-2000
Fax: 315-455-9667
www.cscos.com

CERTIFICATE OF AUTHORIZATION #: 0021365

STATE OF NEW YORK · JACK M. HLUDZIK · NO. 079017 · LICENSED PROFESSIONAL ENGINEER

REGISTRATION EXPIRATION: 9/30/2027

HUDSON VALLEY REGIONAL AIRPORT

AIRPORT SUPPORT BUILDINGS
HUDSON VALLEY REGIONAL AIRPORT
263 NEW HACKENSACK ROAD
WAPPINGERS FALLS, NY 12590

MARK	DATE	DESCRIPTION

REVISIONS

PROJECT NO:	128.056.001
DATE:	SEPTEMBER 2026
DRAWN BY:	JWP
DESIGNED BY:	JWP
CHECKED BY:	PMH

NO ALTERATION PERMITTED HEREON EXCEPT AS PROVIDED UNDER SECTION 7209 SUBDIVISION 2 OF THE NEW YORK EDUCATION LAW

DETAILS

CG-502

SHEET 8 OF 30

Copyright ©

Aug 25, 2026 - 3:28pm
F:\Project\128 - Dutchess County\128056001 - Airport Support Buildings\Design\CAD\D\Sheet Files\128056001_CG-Series.dwg

SECTION I: DESIGN PARAMETERS

1. CODES AND REFERENCE STANDARDS:

A. 2025 BUILDING CODE OF NEW YORK STATE (BCNYS)
B. ASCE/SEI 7-22 MIN DESIGN LOADS AND ASSOCIATED CRITERIA FOR BUILDINGS AND OTHER STRUCTURES (ASCE 7-22)

2. STRUCTURAL LOADING DESIGN DATA:

A. ROOF LIVE LOAD:	20 PSF
B. PEMB ROOF COLLATERAL LOAD:	5 PSF
LIVE LOAD REDUCTION	NONE
C. FLOOR LIVE LOAD (UREA-VEHICLE):	10 KIPS
D. WIND LOAD (3-SEC. GUST):	
ULTIMATE WIND SPEED:	105 MPH
RISK CATEGORY:	I
EXPOSURE CATEGORY:	C
INTERNAL PRESSURE COEFFICIENT:	±0.55
WIND-BORNE DEBRIS REGION	NA
E. RAIN LOAD:	
15-MINUTE PRECIPITATION INTENSITY:	5.84 IN./HR
60-MINUTE PRECIPITATION INTENSITY:	2.52 IN./HR
F. SNOW LOAD:	
GROUND SNOW LOAD (ULTIMATE)	47 PSF
FLAT-ROOF SNOW LOAD (ULTIMATE)	40 PSF
SNOW EXPOSURE FACTOR (Ce)	1.0
SNOW IMPORTANCE FACTOR (Is)	1.0
THERMAL FACTOR (Ct)	1.2
SLOPE FACTOR (Cs)	1.0
DRIFT LOADS CALCULATED PER ASCE 7-22	
G. SEISMIC LOAD:	
RISK CATEGORY	I
SEISMIC IMPORTANCE FACTOR	1.0
SS	.22
S1	.048
SITE CLASS	D
Sds	.17
Sd1	.068
SEISMIC DESIGN CATEGORY	B
ANALYSIS PROCEDURE USED	EQUIVALENT LATERAL FORCE
COLD STORAGE:	
BASIC SEISMIC FORCE-RESISTING SYSTEM	BY PEMB MANUFACTURER
RESPONSE MODIFICATION COEFFICIENT, R	BY PEMB MANUFACTURER
SEISMIC RESPONSE COEFFICIENT, Cs	BY PEMB MANUFACTURER
SEISMIC BASE SHEAR, V	BY PEMB MANUFACTURER
UREA/SALT STORAGE:	
BASIC SEISMIC FORCE-RESISTING SYSTEM	TIMBER FRAMES
RESPONSE MODIFICATION COEFFICIENT, R	1.5
SEISMIC RESPONSE COEFFICIENT, Cs	0.1156
SEISMIC BASE SHEAR, V	1.8 KIPS

3. HANDRAIL ASSEMBLIES AND GUARDS SHALL BE DESIGNED FOR 50 PLF OR A CONCENTRATED LOAD OF 200 LBS LOCATED AT ANY POINT APPLIED IN ANY DIRECTION AT THE TOP AND TRANSFER THE LOAD TO THE SUPPORT STRUCTURE. THE LOADS NEED NOT TO ACT CONCURRENTLY.

GENERAL: (THE FOLLOWING REQUIREMENTS TOGETHER WITH THE PROJECT PLANS AND SPECIFICATIONS SHALL APPLY TO THE STRUCTURES IN THIS CONTRACT.)

1. THE CONTRACTOR IS RESPONSIBLE FOR THE SURVEY AND FIELD VERIFYING ALL EXISTING CONDITIONS.

2. WORK ON STRUCTURAL DRAWINGS REPRESENTS FINAL CONDITIONS. CONTRACTOR SHALL BE RESPONSIBLE FOR THE STRUCTURAL STABILITY OF ALL INTERMEDIATE CONDITIONS DURING CONSTRUCTION.

3. THE CONTRACTOR SHALL COORDINATE THE ARCHITECTURAL, AND ELECTRICAL DRAWINGS AND SPECIFICATIONS FOR ADDITIONAL INFORMATION NOT INDICATED ON THE STRUCTURAL DRAWINGS. SUCH INFORMATION INCLUDES, AS A MINIMUM, EMBEDDED SLEEVES AND INSERTS, MISCELLANEOUS DETAILS, SPECIAL FLOOR FINISHES, DOOR THRESHOLDS, SLOPES TO DRAINS, NAILERS, OPENINGS IN STRUCTURAL ELEMENTS, ETC.

4. IT IS THE SOLE RESPONSIBILITY OF THE CONTRACTOR TO DETERMINE ERECTION PROCEDURE AND SEQUENCE TO ENSURE THE SAFETY OF THE STRUCTURE AND ITS COMPONENT PARTS DURING ERECTION. THIS INCLUDES, BUT IS NOT LIMITED TO, THE ADDITION OF WHATEVER TEMPORARY BRACING, GUYS, TIE-DOWNS, AND/OR SHORING MAY BE NECESSARY. SUCH MATERIAL SHALL BE REMOVED AND SHALL REMAIN THE PROPERTY OF THE CONTRACTOR AFTER THE COMPLETION OF THE PROJECT.

5. IT SHALL BE THE SOLE RESPONSIBILITY OF THE CONTRACTOR FOR INITIATING, MAINTAINING, AND SUPERVISING ALL SAFETY PROCEDURES. THE STRUCTURAL ENGINEER OF RECORD IS NOT RESPONSIBLE FOR MEANS AND METHODS OF CONSTRUCTION OR FOR RELATED SAFETY PROCEDURES.

6. TYPICAL NOTES AND DETAILS SHOWN ON STRUCTURAL TYPICAL DETAILS SHALL BE APPLICABLE TO ALL PARTS OF THE STRUCTURAL WORK EXCEPT WHERE SPECIFICALLY REQUIRED OTHERWISE ON THE CONTRACT DOCUMENTS. DETAILS NOT SPECIFICALLY SHOWN SHALL BE SIMILAR TO THOSE SHOWN FOR THE MOST NEARLY SIMILAR CONDITION ON THE DRAWINGS AS DETERMINED BY THE ENGINEER.

7. DO NOT SCALE DRAWING DIMENSIONS. IN THE EVENT OF A GRID LINE DIMENSION CONFLICT, THE ARCHITECTURAL DRAWINGS SHALL GOVERN.

8. THE CONTRACTOR SHALL SUBMIT COMPLETE SHOP DRAWINGS FOR ALL PARTS OF THE WORK INCLUDING DESCRIPTION OF DEMOLITION, TEMPORARY BRACING, CONSTRUCTION METHODS AND SEQUENCING, WHERE APPLICABLE NO PERFORMANCE OF WORK SHALL COMMENCE WITHOUT REVIEW OF THE SHOP DRAWINGS BY THE ENGINEER.

9. FABRICATION PRIOR TO THE RECEPT OF AN APPROVED SHOP DRAWINGS SHALL BE AT THE CONTRACTOR'S OWN RISK AND THAT INSTALLATION OF ANY WORK PRIOR TO RECEIPT OF AN APPROVED SHOP DRAWING SHALL BE STRICTLY PROHIBITED.

10. FOR ELEVATIONS REFER TO THE PLAN SHEETS.

11. DRILLING, CORING, SAW CUTTING AND ETC. INTO CONCRETE SHALL MEET THE LATEST OSHA REGULATIONS FOR SILICA DUST EXPOSURE.

SECTION II: EXCAVATION

1. DEWATER, EXCAVATE, FILL AND COMPACT SOIL IN PREPARATION FOR SLAB ON GRADE, WALLS, AND FOUNDATION IN ACCORDANCE WITH THE RECOMMENDATIONS PRESENTED IN THE GEOTECHNICAL REPORT PREPARED BY CME ASSOCIATES REPORT NUMBER 188E-02-0525 DATED MAY 22, 2025.

2. ALL EXCAVATIONS SHALL BE DEWATERED TO MAINTAIN GROUNDWATER AT LEAST 24" BELOW FOOTING BEFORE PLACING OF CONCRETE.

3. SLOPE THE EXTERIOR GRADE AWAY FROM THE STRUCTURE. REFER TO CIVIL PLANS FOR DETAILS.

4. PROVIDE TEMPORARY OR PERMANENT SUPPORTS, SHORING, SHEETING OR BRACING SO THAT NO HORIZONTAL MOVEMENT OR VERTICAL SETTLEMENT OCCURS TO ADJACENT STRUCTURES, STREETS, SOILS OR UTILITIES ADJACENT TO OR WITHIN THE PROJECT SITE.

5. BACKFILL SHALL BE PLACED IN COMPACTED LIFTS PER THE EARTHWORK SPECIFICATIONS.

6. NO FOUNDATION CONCRETE SHALL BE PLACED IN WATER.

7. DO NOT BACKFILL BEHIND FOUNDATION WALLS UNTIL THE PERMANENT LATERAL SUPPORT SYSTEM IS IN PLACE AND OF FULL STRENGTH.

8. COMPONENTS OF ANY SUPPORT OF EXCAVATION SYSTEM SHALL REMAIN IN PLACE UNTIL ALL PERMANENT STRUCTURAL SYSTEMS AT AND BELOW GROUND ARE IN PLACE.

SECTION III: SOILS

1. THE FOUNDATION HAS BEEN DESIGNED IN ACCORDANCE WITH THE RECOMMENDATIONS CONTAINED IN THE GEOTECHNICAL REPORT PREPARED BY CME ASSOCIATES REPORT NUMBER 188E-02-0525 DATED MAY 22, 2025.

2. THE GEOTECHNICAL REPORT NAMED ABOVE IS AVAILABLE TO THE CONTRACTOR UPON REQUEST TO THE OWNER. THE ARCHITECT AND ENGINEER WILL NOT BE RESPONSIBLE FOR THE ACCURACY OR APPLICABILITY OF SUCH DATA THEREIN.

3. NO RESPONSIBILITY IS ASSUMED BY THE ENGINEER FOR THE VALIDITY OF THE SUBSURFACE CONDITIONS DESCRIBED ON THE DRAWINGS, SPECIFICATIONS, TEST BORINGS, OR TEST PITS. THESE DATA ARE INCLUDED ONLY TO ASSIST THE CONTRACTOR DURING BIDDING AND SUBSEQUENT CONSTRUCTION. THEY REPRESENT CONDITIONS ONLY AT THE SPECIFIC LOCATIONS AT THE TIME DATA WAS COLLECTED.

4. MAXIMUM ALLOWABLE SOIL BEARING PRESSURE = 3000 PSF.

5. FOOTINGS TO BEAR ON NATURAL UNDISTURBED SOIL OR COMPACTED FILL PER THE GEOTECHNICAL ENGINEER'S RECOMMENDATIONS TO EXHIBIT A DENSITY OF AT LEAST 95 PERCENT OF THE MAXIMUM DRY DENSITY AS DETERMINED BY ASTM D 1557 (MODIFIED PROCTOR).

6. GEOTECHNICAL ENGINEER MUST REVIEW THE FINAL SITE AND GRADING PLANS TO VALIDATE ALL RECOMMENDATIONS SET FORTH IN THE GEOTECHNICAL REPORT AND CONFIRM THEIR FINDINGS. THE CONTRACTOR SHALL BE RESPONSIBLE FOR COORDINATION OF INSPECTIONS OR EXAMINATIONS PRIOR TO CONSTRUCTION COMMENCEMENT.

7. PERFORM SOIL COMPACTION TESTING, AT LEAST ONE TEST EVERY 100 FEET OF WALL FOOTING. PROVIDE A MINIMUM OF 4 SOIL COMPACTION TESTS AT EVERY BUILDING.

SECTION IV: POST-INSTALLED ANCHORS

1. ALL POST INSTALLED ANCHORS INTO MASONRY USE HILTI HIT-HY 70 SYSTEM OR APPROVED EQUAL.

2. ALL POST INSTALLED ANCHORS INTO EXISTING CONCRETE USE HILTI HIT-HY 200 INJECTION ADHESIVE ANCHOR OR APPROVED EQUAL.

3. ALL POST-INSTALLED ANCHOR PRODUCTS SHALL BE INSTALLED IN STRICT ACCORDANCE WITH THE MANUFACTURER'S INSTALLATION PROCEDURES.

4. DRILLING, CORING, SAW CUTTING AND ETC. INTO CONCRETE SHALL MEET THE LATEST OSHA REGULATIONS FOR SILICA DUST EXPOSURE.

SECTION V: CAST-IN-PLACE CONCRETE

1. CONCRETE SHALL CONFORM TO THE REQUIREMENTS OF ACI 301 - SPECIFICATIONS FOR STRUCTURAL CONCRETE FOR BUILDINGS.

2. STANDARDS:
DESIGN: ACI 318 - 2019
DETAILS: ACI 315 - 2018, ACI 350 - 2022
MATERIALS: ACI 301 - 2016

3. DESIGN STRENGTH:
SLAB ON GRADE: 4000 PSI COMPRESSIVE STRENGTH @ 28 DAYS, NORMAL WEIGHT AIR ENTRAINED CONCRETE.
FOUNDATION WALLS: 4000 PSI COMPRESSIVE STRENGTH @ 28 DAYS, NORMAL WEIGHT AIR ENTRAINED CONCRETE.
SALT STORAGE: 4500 PSI COMPRESSIVE STRENGTH @ 28 DAYS, NORMAL WEIGHT AIR ENTRAINED CONCRETE.

4. SUBMIT PROPOSED CONCRETE MIX DESIGN TO THE OWNER'S REPRESENTATIVE AND TESTING LABORATORY CONCURRENTLY FOR REVIEW AND APPROVAL.

5. CONCRETE COVER OVER BARS:
CONCRETE DEPOSITED ON GROUND 3".
FORMED CONCRETE EXPOSED TO GROUND, WEATHER OR WATER 2".
WALLS & SLABS NOT DIRECTLY EXPOSED TO GROUND, WATER, OR WEATHER 1-1/2".

6. CLEAN AND APPLY BONDING AGENT TO ALL EXISTING CONCRETE SURFACES TO RECEIVE NEW CONCRETE. ALL CONCRETE TO CONFORM WITH THE LATEST ACI BUILDING CODE REQUIREMENTS FOR REINFORCED CONCRETE (ACI - 301).

7. SECTIONS AND DETAILS MAY NOT SHOW ALL REQUIRED CONCRETE REINFORCEMENT. ADDITIONAL REINFORCEMENT MAY BE DESCRIBED IN SCHEDULES (IF APPLICABLE) AND NOTES.

8. PROVIDE BAR SUPPORTS AND SPACERS IN ACCORDANCE WITH REQUIREMENTS OF ACI 315 UNLESS NOTED OTHERWISE.

9. NOT ALL ITEMS EMBEDDED IN THE CONCRETE ARE SHOWN ON THE STRUCTURAL DRAWINGS. THE CONTRACTOR SHALL BE RESPONSIBLE FOR COORDINATING THE INSTALLATION OF ALL OPENINGS AND EMBEDDED ITEMS IN THE CONCRETE PERTAINING TO THE DIFFERENT TRADES AS SHOWN ON THEIR PERSPECTIVE DRAWINGS. SLEEVES, MECHANICAL OPENINGS, CONDUITS, PIPES, RECESSES, DEPRESSIONS, CURBS, AND ALL EMBEDDED ITEMS SHALL BE PROVIDED AS SHOWN ON THE ARCHITECTURAL, MECHANICAL, PLUMBING, AND ELECTRICAL DRAWINGS AND AS REQUIRED BY THE EQUIPMENT MANUFACTURERS.

10. EMBEDDED CONDUITS, PIPES, OR OTHER UTILITIES NOT SHOWN ON THE STRUCTURAL DRAWINGS SHALL NOT BE PERMITTED WITHOUT WRITTEN PERMISSION FROM THE ENGINEER. WHERE EMBEDDED ITEMS ARE ALLOWED, THEY SHALL BE SPACED NOT LESS THAN THREE DIAMETERS ON CENTER EACH WAY BUT WITH NOT LESS THAN TWO INCHES CLEAR SPACE BETWEEN EMBEDDED ITEMS. THE TOTAL DEPTH OF ALL EMBEDDED ITEMS AND THE CLEAR SPACE BETWEEN THEM SHALL NOT EXCEED 1/3 OF THE TOTAL CONCRETE DEPTH AND SHALL BE CONFINED TO THE MIDDLE THIRD OF THE CONCRETE DEPTH.

11. HORIZONTAL CONSTRUCTION JOINTS IN CONCRETE POURS (EXCEPT SHEAR WALLS) ARE PROHIBITED UNLESS AUTHORIZED BY ENGINEER.

12. UNLESS OTHERWISE NOTED ON THE DRAWINGS, THE SIZE OF CONCRETE PLACEMENTS SHALL BE LIMITED AS FOLLOWS:
A. STRIP FOOTINGS AND WALLS: 60 FT (UNLESS INTERMEDIATE CONTROL JOINTS ARE PROVIDED)
B. SLABS ON GRADE: 30 FT MAX DIMENSION AND 900 SQ FT. (UNLESS INTERMEDIATE CONTROL JOINTS ARE PROVIDED)

13. PROVIDE 3/4" CHAMFER ON ALL EXPOSED CONCRETE EDGES U.N.O.

14. THROUGH PENETRATIONS FOR CONCRETE WALLS OR SLABS SHALL CONFORM TO STANDARD DETAIL DRAWINGS.

15. MULTIPLE PENETRATIONS SHALL NOT BE SPACED CLOSER THAN THREE TIMES THE DIAMETER OR THREE TIMES THE WIDTH OF THE LARGER OPENING WITHOUT APPROVAL OF THE ENGINEER.

SECTION VI: CONCRETE REINFORCING

1. REINFORCING:
MESH: ASTM A-185 (FLAT SHEETS)
BARS: ASTM A-615 GRADE 60 - DEFORMED.

2. SPLICES IN REINFORCEMENT: UNLESS OTHERWISE NOTED, ALL SPLICES AND ANCHORAGES SHALL BE PER ACI. STAGGER SPLICES WHEREVER POSSIBLE AND LOCATE SO AS NOT TO IMPAIR STRENGTH OF MEMBERS.

3. REINFORCEMENT WORK OF DETAILING, FABRICATION ,AND ERECTION SHALL CONFORM TO THE BUILDING CODE REQUIREMENTS FOR REINFORCED CONCRETE (ACI 318, ACI 350, ACI DETAILING MANUAL-2004 (SP 66) CRSI MANUAL OF STANDARD PRACTICE (MSP 2009), AND THE STRUCTURAL WELDING CODE- REINFORCING STEEL (AWS D1.1).

4. PROVIDE AND SCHEDULE ON SHOP DRAWINGS THE NECESSARY ACCESSORIES TO HOLD ALL REINFORCEMENT SECURELY IN POSITION.

5. WHERE CONTINUOUS REINFORCEMENT IS CALLED FOR , IT SHALL BE EXTENDED CONTINUOUSLY AROUND CORNERS AND LAPPED AT SPLICES OR AT DISCONTINUOUS ENDS. LAPS SHALL BE CLASS B TENSION LAP SPLICES UNLESS OTHERWISE NOTED.

6. WHERE REINFORCEMENT IS NOT SHOWN ON DRAWINGS, PROVIDE REINFORCEMENT IN ACCORDANCE WITH APPLICABLE DETAILS AS DETERMINED BY THE ENGINEER. IN NO CASE SHALL THE REINFORCEMENT BE LESS THAN THE MINIMUM PERMITTED BY THE APPLICABLE CODES.

7. WHERE REINFORCEMENT IS REQUIRED IN SECTION, REINFORCEMENT IS CONSIDERED TYPICAL WHEREVER THE SECTION APPLIES.

8. WHERE THERE IS A CONFLICT BETWEEN COLUMN VERTICAL BARS AND SLAB OR BEAM HORIZONTAL BARS THE COLUMN BARS SHALL REMAIN IN THEIR DESIGNATED POSITIONS AND THE HORIZONTAL BARS SHALL BE ADJUSTED.

9. REINFORCEMENT SHALL BE CONTINUOUS THROUGH CONSTRUCTION JOINTS.

10. COLUMN DOWELS SHALL BE SET WITH A TEMPLATE SO AS TO BE ENCLOSED BY THE COLUMN TIES.

11. DOWELS SHALL MATCH BAR SIZES UNLESS OTHERWISE NOTED.

12. WELDED WIRE FABRIC SHALL BE LAPPED 8 INCHES OR 1 1/2 SQUARES WHICHEVER IS LARGER AND SHALL BE WIRED TOGETHER.

13. REINFORCEMENT SHALL NOT BE TACK WELDED. REINFORCING BARS TO BE WELDED SHALL CONFORM TO ASTM A706 FY=60KSI.

14. REINFORCEMENT INSTALLATION SHALL BE COMPLETED AT LEAST 24 HOURS BEFORE A CONCRETE PLACEMENT OR SHALL BE COORDINATED WITH THE SPECIAL INSPECTOR TO ENSURE PROPER TIME IS ALLOWED FOR THE INSPECTION OF THE REINFORCING. NOTIFY THE ENGINEER OF COMPLETION.

15. ALL REINFORCEMENT SHALL BE SECURELY TIED IN PLACE AT THE POSITIONS SHOWN ON THE DRAWINGS BEFORE PLACING CONCRETE.

16. UNLESS NOTED OTHERWISE, ALL BARS SHALL BE EMBEDDED TO A MINIMUM DEPTH (Ld OR Ldh).

SECTION VII: CONCRETE FLOOR SLABS

1. ALL SLABS SHALL BE PLACED ON 6" OF FREE DRAINING COMPACTED SELECT STRUCTURAL FILL.

2. THE DESIGN OF CONCRETE MIXES, LOCATING OF CONSTRUCTION JOINTS IN SLABS, STAGGERING OF POUR PLACEMENTS, LOCATION OF POUR STRIPS, AND PLACEMENT AND CURING PROCEDURES ARE TO BE PERFORMED BY THE CONTRACTOR IN A MANNER THAT WILL MINIMIZE SHRINKAGE CRACKING OF THE SLABS.

3. SUBSEQUENT PLACEMENT OF ALTERNATE SLAB STRIPS SHOULD NOT BE MADE SOONER THAN 24 HOURS AFTER THE COMPLETION OF SLAB FINISHING OPERATIONS AND THE INITIATION OF CURING PROCEDURES.

4. THE CONTRACTOR SHALL REPAIR ALL CRACKS DESIGNATED AS UNACCEPTABLE BY THE ENGINEER BY EPOXY INJECTION AT NO ADDITIONAL COST TO THE CONTRACT.

5. THE CONTRACTOR SHALL SUBMIT TO THE EOR FOR REVIEW PRIOR TO THE DEVELOPMENT OF SLAB REINFORCING SHOP DRAWINGS, A PROPOSED SLAB CONSTRUCTION JOINT LAYOUT PLAN, ALONG WITH PROPOSED METHODS FOR CONTROLLING SHRINKAGE CRACKING IN THE SLABS. CONTROL JOINT SPACING NOT TO EXCEED 15 FEET IN ANY DIRECTION, WITH CONTROL JOINT LAYOUT CREATING RECTANGULAR SHAPED SLAB SECTIONS. CONTROL JOINT SLAB RECTANGULAR SHAPE CONFIGURATION NOT TO EXCEED A LENGTH TO WIDTH RATIO OF 1.5 IN ANY DIRECTION.

SECTION VIII: WOOD TRUSSES

1. DESIGN OF PLATE CONNECTED TRUSSES SHALL CONFORM TO NATIONAL DESIGN STANDARDS (NDS-2024). TRUSS PLATE INSTITUTE CRITERIA (TPI-2022). TRUSS FABRICATION SHALL COMPLY WITH TPI QUALITY CONTROL STANDARDS (QCM-77).

2. TRUSS DESIGNS AND LAYOUTS SHALL BE SEALED BY A NEW YORK LICENSED PROFESSIONAL ENGINEER AND SUBMITTED TO ENGINEER FOR REVIEW PRIOR TO FABRICATION. SUBMITTAL SHALL CLEARLY INDICATE DESIGN LOADS, MEMBER STRESSES, LUMBER GRADES, SPLICE LOCATIONS, REQUIRED BLOCKING, BRIDGING, BRACING, PLACEMENT, PLACEMENT PROCEDURES, LOAD BEARING WALLS, TRUSS DESIGNATION, BUILDING NUMBER, AND NAME OF PROJECT. LOADING SHALL BE AS NOTED ON THE DRAWINGS.

3. DURING CONSTRUCTION, TRUSSES SHALL BE ERECTED, BRACE, AND BLOCKED IN ACCORDANCE WITH COMMENTARY AND RECOMMENDATIONS FOR HANDLING, INSTALLING AND BRACING OF METAL PLATE CONNECTED WOOD TRUSSES (HIB-91) BY TPI. ALL TEMPORARY BRACING SHALL NOT BE REMOVED AND CONSIDERED PERMANENT UNLESS REMOVAL IS REQUIRED FOR COMPLETION OF WORK.

4. PROVIDE PERMANENT 2X4 LATERAL "X" BRACING IN THE PLANE OF THE TRUSS WEBS AND FRAME AT A 45 DEGREE ANGLE. NAIL TO ARCH CROSSING TRUSS WITH AT LEAST 2-16D NAILS. THE "X" BRACING SHALL ALIGN WITH THE BOTTOM CHORD LATERAL BRACING AND OCCUR AT EACH END OF THE BUILDING.

5. PROVIDE PRE-ENGINEERED TRUSS SHEAR BLOCKING BETWEEN TRUSSES AT ALL SHEAR WALL LOCATIONS. TRUSS SUPPLIER SHALL PROVIDE TRUSS SHEAR BLOCK TO TRUSS COMPONENT CONNECTION/DETAIL. SHEAR BLOCK SHALL BE FULL HEIGHT OF TRUSS ASSEMBLY.

6. TRUSS IDENTIFICATION SHALL BE IN ACCORDANCE WITH BCNYS AND REFEREED TO THE ARCHITECTURAL DRAWINGS FOR DESIGNATION.

LEGEND / ABBREVIATIONS:

ADDL	ADDITIONAL	HORIZ	HORIZONTAL
AFF	ABOVE FINISHED FLOOR		
ALT	ALTERNATE	K	KIP
B/F	BOTTOM OF FOOTING	L	ANGLE
BRG	BEARING		
		MAX	MAXIMUM
CFMF	COLD-FORMED METAL FRAMING	MIN	MINIMUM
CJ	CONTROL JOINT		
CL	CENTERLINE	OC	ON CENTER
CLR	CLEAR	OCEF	ON CENTER, EACH FACE
CMU	CONCRETE MASONRY UNIT	OCEW	ON CENTER, EACH WAY
COL	COLUMN		
CONC	CONCRETE	P__	PIER
CONT	CONTINUOUS	PL	PLATE
DIA	DIAMETER	REINF	REINFORCEMENT
do	DO OVER	REQD	REQUIRED
DW	DOWEL	RO	ROOF OPENING
D2L	DEFORMED BAR ANCHOR		
		SCH	SCHEDULE
EF	EACH FACE	SIM	SIMILAR
EFEW	EACH FACE, EACH WAY	SOG	SLAB ON GRADE
EL	ELEVATION		
EJ	EXPANSION JOINT	T&B	TOP AND BOTTOM
EMB	EMBEDMENT	T/SLAB	TOP OF SLAB ELEVATION
EMP	EMBED PLATE	T/WALL	TOP OF WALL ELEVATION
EW	EACH WAY	TYP	TYPICAL
EXIST	EXISTING		
EXP	EXPANSION	UNO	UNLESS NOTED OTHERWISE
FF	FINISHED FLOOR	VERT	VERTICAL
FS	FOUNDATION STEP		
		WP	WORK POINT
GALV	GALVANIZED	WWF	WELDED WIRE FABRIC

C4 ABBREVIATIONS
SCALE: NOT TO SCALE

SECTION IX: WOOD FRAMING

1. ALL LUMBER SHALL BE PS 20, NEW AND UNDAMAGED GRADED LUMBER IN ACCORDANCE WITH NFPA GRADING RULES. FRAMING MEMBERS SHALL BE S4S UNLESS NOTES OTHERWISE. ALL WOOD BEARING ON CONCRETE OR MASONRY SHALL BE PRESSURE TREATED. ROUGH FRAMING (2X4 - 2X12) SHALL BE SOUTHERN PINE #1.

2. NAILS, SPIKES, AND STAPLES SHALL BE GALVANIZED FOR EXTERIOR LOCATIONS, HIGH HUMIDITY LOCATIONS, AND TREATED WOOD; PLAIN FINISH FOR OTHER INTERIOR LOCATIONS; SIZE AND TYPE TO SUIT APPLICATION TYPICAL NAILINGS SHALL BE WITH COMMON WIRE NAILS.

3. BOLTS, NUTS, WASHERS, LAGS AND SCREWS SHALL BE MEDIUM CARBON STEEL; SIZE AND TYPE TO SUIT APPLICATION; GALVANIZED FOR EXTERIOR LOCATIONS; HIGH HUMIDITY LOCATIONS, AND TREATED WOOD; PLAIN FINISH FOR OTHER INTERIOR LOCATIONS.

4. PLYWOOD SHEATHING CLIPS SHALL BE SIMPSON STRONG-TIE 18 GAGE GALVANIZED BY PLYWOOD THICKNESS.

5. SHORE FRAMING MATERIAL A MINIMUM OF 12" ABOVE THE GROUND IN A MANNER TO ALLOW FOR PROPER DRAINAGE, VENTILATION AND PROTECTION FROM THE WEATHER.

SECTION X: DELEGATED DESIGN

1. THE FOLLOWING ARE DELEGATED DESIGN BUILDING ELEMENTS THAT MUST COMPLY WITH SPECIFIED PERFORMANCE PARAMETERS. DELEGATED DESIGN BUILDING ELEMENTS WILL BE REVIEWED AS PART OF THE SUBMITTAL/SHOP DRAWING PROCESS:
A. PRE-ENGINEERED METAL BUILDING (PEMB)
B. WOOD TRUSSES

A1 GENERAL NOTES
SCALE: NOT TO SCALE

C&S COMPANIES®
C&S Engineers, Inc.
499 Col. Eileen Collins Blvd.
Syracuse, New York 13212
Phone: 315-455-2000
Fax: 315-455-9667
www.cscos.com

CERTIFICATE OF AUTHORIZATION #: 0021365
STATE OF NEW YORK · JOHN W. OBLEMAN · 082000 · LICENSED PROFESSIONAL ENGINEER
REGISTRATION EXPIRES: 5/31/28

HUDSON VALLEY REGIONAL AIRPORT

AIRPORT SUPPORT BUILDINGS
HUDSON VALLEY REGIONAL AIRPORT
263 NEW HACKENSACK ROAD
WAPPINGERS FALLS, NY 12590

MARK	DATE	DESCRIPTION

REVISIONS

PROJECT NO:	128.065.001
DATE:	SEPTEMBER 2026
DRAWN BY:	B. ZUHRIC
DESIGNED BY:	B. ZUHRIC
CHECKED BY:	J. OBLEMAN, PE

NO ALTERATION PERMITTED HEREON EXCEPT AS PROVIDED UNDER SECTION 7209 SUBDIVISION 2 OF THE NEW YORK EDUCATION LAW

GENERAL NOTES

S-001
SHEET NO. 9 /30

Copyright ©

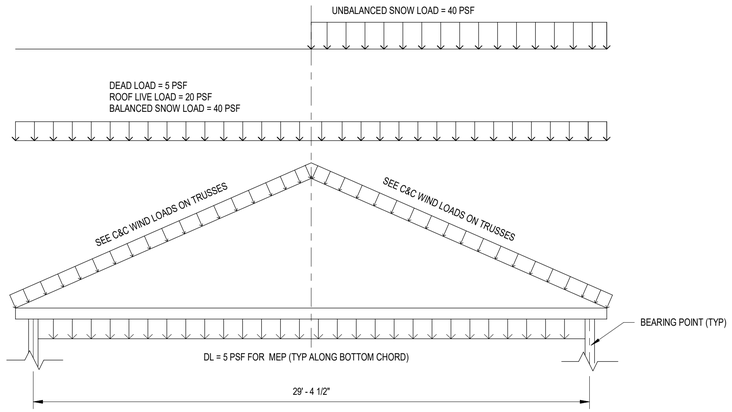

C1 SALT STORAGE TRUSS LOADING DIAGRAM

SCALE: 1/4" = 1'-0"

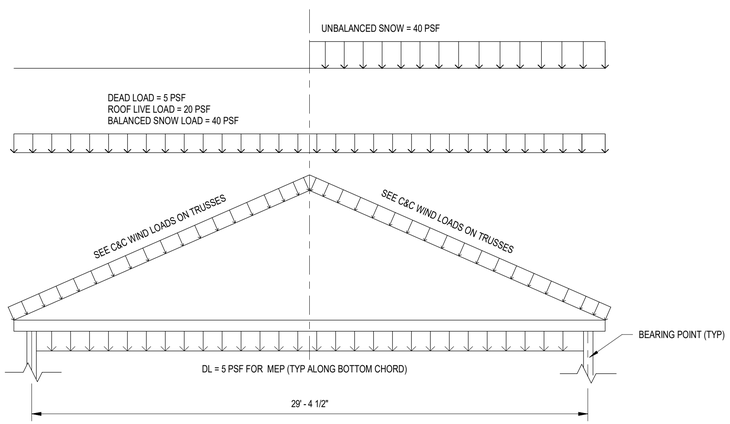

NOTE:
DRIFT LOADS TO BE ADDED SEE
A1 / S-002

B1 UREA STORAGE TRUSS LOADING DIAGRAM

SCALE: 1/4" = 1'-0"

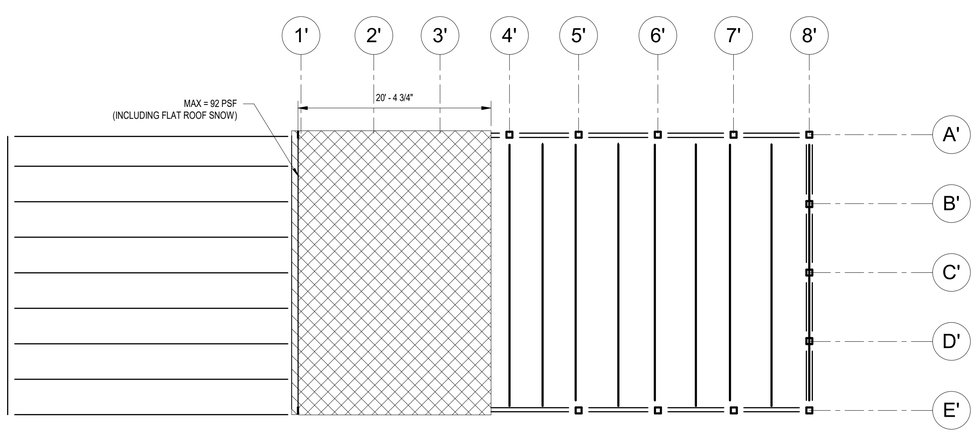

A1 SALT AND UREA STORAGE BUILDING - SNOW DRIFT PLAN

SCALE: 1/8" = 1'-0"

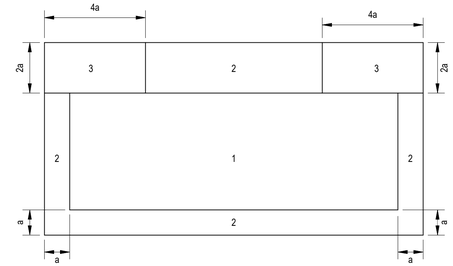

PLAN ON ROOF

ELEVATION OF SIDE WALLS

ZONE	EFF. AREA (SQFT)	PRES (+VE) (PSF)	PRES (-VE) (PSF)
1	<10sf	23	31
	20sf	22	31
	50sf	20	30
	>100sf	19	29
2	<10sf	23	49
	20sf	22	45
	50sf	20	41
	>100sf	19	38
3	<10sf	23	68
	20sf	22	64
	50sf	20	59
	>100sf	19	55
4	<10sf	34	36
	20sf	32	35
	50sf	31	33
	100sf	30	32
	>500sf	27	29
5	<10sf	34	42
	20sf	32	40
	50sf	31	37
	100sf	30	35
	>500sf	27	29

COMPONENTS AND CLADDING WIND PRESSURE NOTES:

1. WIND PRESSURES SHOWN ARE ULTIMATE LOADS CALCULATED IN ACCORDANCE WITH ASCE 7-22

2. LINEAR INTERPOLATION FOR VALUES BETWEEN THOSE SHOWN IN THE TABLE IS ALLOWED.

3. SEE ASCE 7-22 FOR DEFINITIONS OF AREAS SHOWN.

4. (+VE) ACTS TOWARDS THE SURFACE; (-VE) ACTS AWAY FROM THE SURFACE

A3 C&C WIND LOAD DIAGRAM - COLD STORAGE

SCALE: 1" = 1'-0"

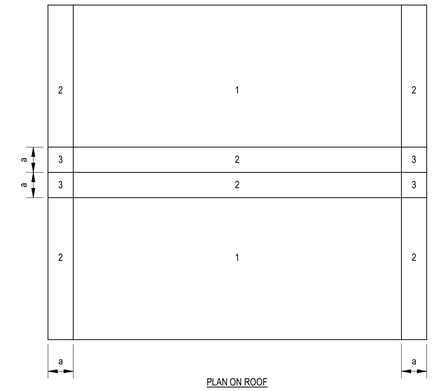

PLAN ON ROOF

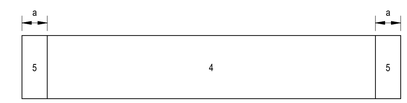

ELEVATION OF SIDE WALL

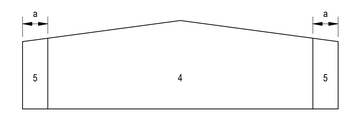

ELEVATION OF GABLE WALL

ZONE	EFF. AREA (SQFT)	PRES (+VE) (PSF)	PRES (-VE) (PSF)
1	<10sf	24	33
	20sf	23	33
	50sf	21	32
	>100sf	20	31
2	<10sf	24	51
	20sf	23	48
	50sf	21	43
	>100sf	20	40
3	<10sf	24	72
	20sf	23	68
	50sf	21	62
	>100sf	20	58
4	<10sf	35	38
	20sf	34	37
	50sf	33	35
	100sf	31	34
	>500sf	29	31
5	<10sf	35	45
	20sf	34	42
	50sf	33	39
	100sf	31	37
	>500sf	29	31

COMPONENTS AND CLADDING WIND PRESSURE NOTES:

1. WIND PRESSURES SHOWN ARE ULTIMATE LOADS CALCULATED IN ACCORDANCE WITH ASCE 7-22

2. LINEAR INTERPOLATION FOR VALUES BETWEEN THOSE SHOWN IN THE TABLE IS ALLOWED.

3. SEE ASCE 7-22 FOR DEFINITIONS OF AREAS SHOWN.

4. (+VE) ACTS TOWARDS THE SURFACE; (-VE) ACTS AWAY FROM THE SURFACE

A4 C&C WIND LOAD DIAGRAM - SALT AND UREA STORAGE

SCALE: 1" = 1'-0"

C&S COMPANIES®
C&S Engineers, Inc.
499 Col. Eileen Collins Blvd.
Syracuse, New York 13212
Phone: 315-455-2000
Fax: 315-455-9667
www.cscos.com

CERTIFICATE OF AUTHORIZATION #: 0021365

STATE OF NEW YORK · JOHN W. OBLEMAN · 082000 · LICENSED PROFESSIONAL ENGINEER

REGISTRATION EXPIRES: 5/31/28

HUDSON VALLEY REGIONAL AIRPORT

AIRPORT SUPPORT BUILDINGS
HUDSON VALLEY REGIONAL AIRPORT
263 NEW HACKENSACK ROAD
WAPPINGERS FALLS, NY 12590

MARK	DATE	DESCRIPTION

REVISIONS

PROJECT NO: 128.065.001
DATE: SEPTEMBER 2026
DRAWN BY: B. ZUHRIC
DESIGNED BY: B. ZUHRIC
CHECKED BY: J. OBLEMAN, PE

NO ALTERATION PERMITTED HEREON EXCEPT AS PROVIDED UNDER SECTION 7209 SUBDIVISION 2 OF THE NEW YORK EDUCATION LAW

LOADING DIAGRAMS

S-002
SHEET NO. 10/30

Copyright ©

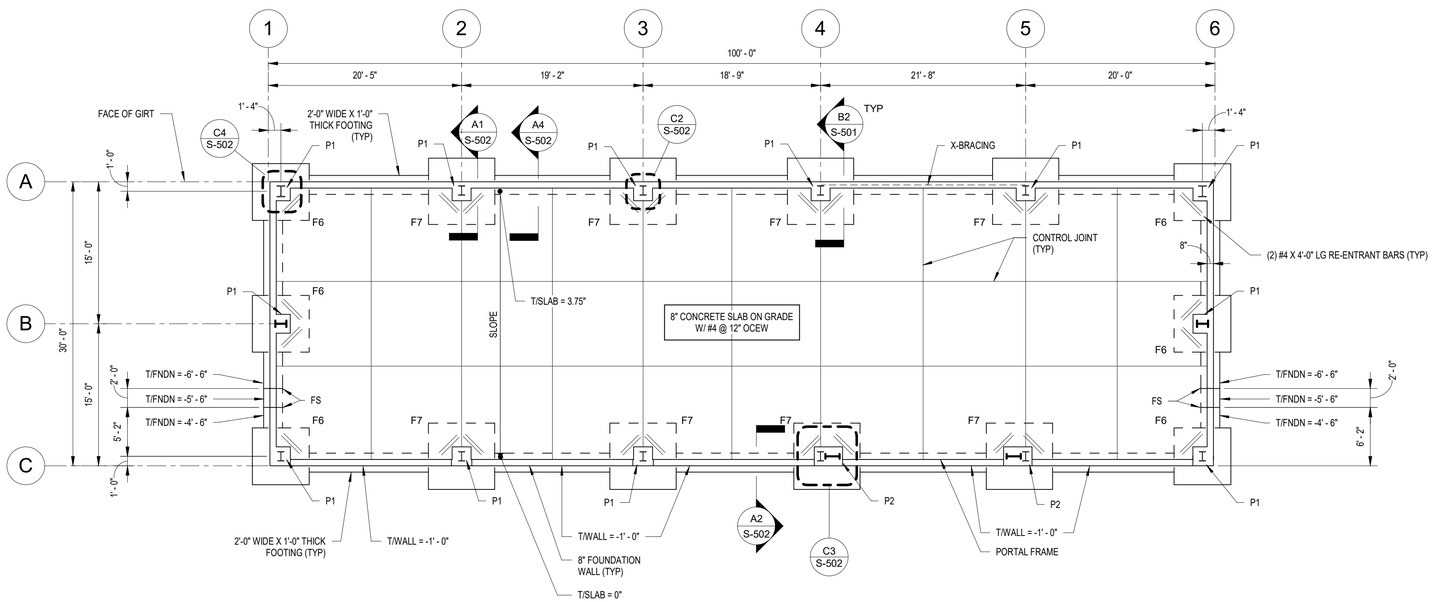

NOTE: FOUNDATION PLAN IS FOR BIDDING PURPOSES ONLY. FINAL FOUNDATION DESIGN WILL BE PROVIDED ONCE APPROVED PRE-ENGINEERED METAL BUILDING SHOP DRAWINGS HAVE BEEN RECEIVED

FOUNDATION AND SLAB PLAN GENERAL NOTES:

1. ELEVATIONS REFERENCED FROM LEVEL 1 T/CONC = 0'-0"
2. REFER TO SHEETS S-001, S-501 AND S-502 FOR GENERAL FOUNDATION NOTES AND STANDARD DETAILS
3. COORDINATE ACTUAL SIZE AND LOCATION OF WALL OPENINGS WITH ARCHITECTURAL AND ELECTRICAL DRAWINGS INCLUDING THEIR APPROVED SHOP DRAWINGS TO ENSURE COORDINATION OF ALL TRADES
4. REFER TO CIVIL DRAWINGS FOR LOCATIONS OF UNDERGROUND UTILITIES
5. T/FOUNDATION = -6'-6" UNLESS NOTED OTHERWISE
6. T/WALL = 0'-8" UNLESS NOTED OTHERWISE
7. T/PIER = 0'-8" UNLESS NOTES OTHERWISE
8. ALL FOUNDATION FOOTINGS SHALL BE PLACED ON AT LEAST 1'-0" OF COMPACTED SELECT STRUCTURAL FILL PER THE GEOTECHNICAL REPORT
9. PROVIDE (2) - #4 x 4'-0" LONG SLAB REINFORCEMENT AT ALL RE-ENTRANT CORNERS OF SLABS
10. ALL SLABS ON GRADE SHALL BE PLACED ON AT LEAST 0'-6" OF COMPACTED SELECT STRUCTURAL FILL

T/FOUNDATION = -6'-6" UNO

REFER TO CIVIL DRAWINGS FOR FINISHED FLOOR ELEVATION

PLAN NORTH

A1 FOUNDATION PLAN - COLD STORAGE BUILDING

SCALE: 1/8" = 1'-0"

0 4' 8' 16'

C&S COMPANIES®
C&S Engineers, Inc.
499 Col. Eileen Collins Blvd.
Syracuse, New York 13212
Phone: 315-455-2000
Fax: 315-455-9667
www.cscos.com

CERTIFICATE OF AUTHORIZATION #: 0021365

STATE OF NEW YORK · JOHN W. OBLEMAN · 082000 · LICENSED PROFESSIONAL ENGINEER

REGISTRATION EXPIRES: 5/31/28

HUDSON VALLEY REGIONAL AIRPORT

AIRPORT SUPPORT BUILDINGS
HUDSON VALLEY REGIONAL AIRPORT
263 NEW HACKENSACK ROAD
WAPPINGERS FALLS, NY 12590

MARK	DATE	DESCRIPTION

REVISIONS

PROJECT NO:	128.065.001
DATE:	SEPTEMBER 2026
DRAWN BY:	B. ZUHRIC
DESIGNED BY:	B. ZUHRIC
CHECKED BY:	J. OBLEMAN, PE

NO ALTERATION PERMITTED HEREON EXCEPT AS PROVIDED UNDER SECTION 7209 SUBDIVISION 2 OF THE NEW YORK EDUCATION LAW

COLD STORAGE FOUNDATION AND SLAB PLAN

S-101

SHEET NO. 11/30

Copyright ©

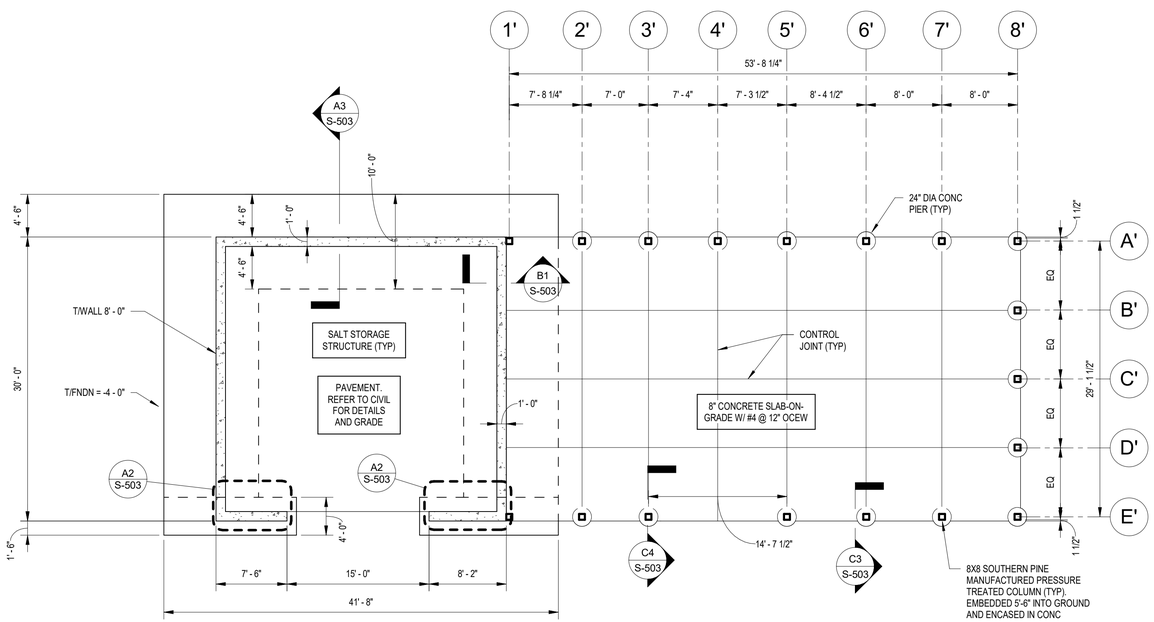

FOUNDATION AND SLAB PLAN GENERAL NOTES:

1. ELEVATIONS REFERENCED FROM LEVEL 1 T/CONC = 0'-0"
2. REFER TO SHEETS S-001, S-501 AND S-502 FOR GENERAL FOUNDATION NOTES AND STANDARD DETAILS
3. COORDINATE ACTUAL SIZE AND LOCATION OF WALL OPENINGS WITH ARCHITECTURAL AND ELECTRICAL DRAWINGS INCLUDING THEIR APPROVED SHOP DRAWINGS TO ENSURE COORDINATION OF ALL TRADES
4. REFER TO CIVIL DRAWINGS FOR LOCATIONS OF UNDERGROUND UTILITIES
5. T/FOUNDATION = -4'-0" UNLESS NOTED OTHERWISE
6. T/WALL = 0'-0" UNLESS NOTED OTHERWISE
7. T/PIER = 0'-6" UNLESS NOTES OTHERWISE
8. ALL FOUNDATION FOOTINGS SHALL BE PLACED ON AT LEAST 1'-0" OF COMPACTED SELECT STRUCTURAL FILL PER THE GEOTECHNICAL REPORT
9. PROVIDE (2) - #4 x 4'-0" LONG SLAB REINFORCEMENT AT ALL RE-ENTRANT CORNERS OF SLABS
10. ALL SLABS ON GRADE SHALL BE PLACED ON AT LEAST 0'-6" OF COMPACTED SELECT STRUCTURAL FILL

T/FOUNDATION = -4'-0" UNO

REFER TO CIVIL DRAWINGS FOR FINISHED FLOOR ELEVATION

PLAN NORTH

A1 FOUNDATION PLAN - SALT AND UREA STORAGE

SCALE: 1/8" = 1'-0"

0 4' 8' 16'

C&S COMPANIES®
C&S Engineers, Inc.
499 Col. Eileen Collins Blvd.
Syracuse, New York 13212
Phone: 315-455-2000
Fax: 315-455-9667
www.cscos.com

CERTIFICATE OF AUTHORIZATION #: 0021365

STATE OF NEW YORK · JOHN W. OBLEMAN · 082000 · LICENSED PROFESSIONAL ENGINEER

REGISTRATION EXPIRES: 5/31/28

HUDSON VALLEY REGIONAL AIRPORT

AIRPORT SUPPORT BUILDINGS
HUDSON VALLEY REGIONAL AIRPORT
263 NEW HACKENSACK ROAD
WAPPINGERS FALLS, NY 12590

MARK	DATE	DESCRIPTION

REVISIONS

PROJECT NO:	128.065.001
DATE:	SEPTEMBER 2026
DRAWN BY:	B. ZUHRIC
DESIGNED BY:	B. ZUHRIC
CHECKED BY:	J. OBLEMAN, PE

NO ALTERATION PERMITTED HEREON EXCEPT AS PROVIDED UNDER SECTION 7209 SUBDIVISION 2 OF THE NEW YORK EDUCATION LAW

SALT AND UREA STORAGE FOUNDATION AND SLAB PLAN

S-102

SHEET NO. 12/30

Copyright ©

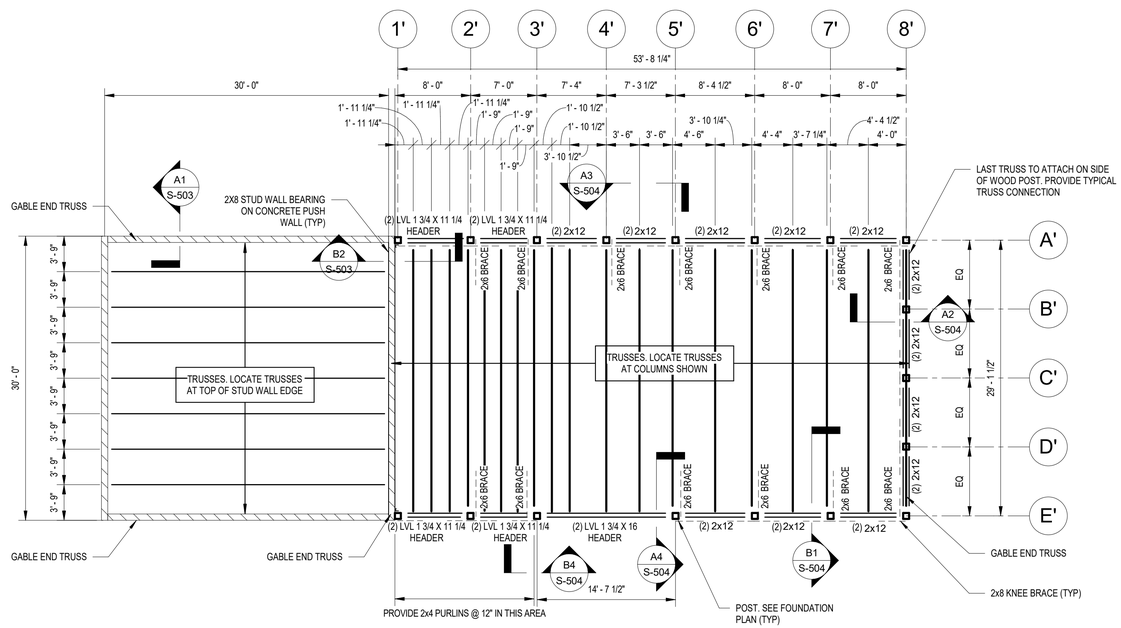

ROOF PLAN GENERAL NOTES:

1. REFER TO SHEET S-001 FOR STEEL, JOIST, AND METAL DECK NOTES
2. TOP OF FRAMING (T/FRAMING) ELEVATION IS 13'-10 1/2". ELEVATIONS NOTES (+X") OR (-X") DENOTES THE ELEVATION FROM PLAN T/FRAMING ELEVATION
3. FOR TRUSS LOADING DIAGRAM, SEE C1 / S-002 AND B1 / S-002
4. TOP OF FRAMING FOR THE SALT STORAGE STRUCTURE IS 21'-10 1/2" UNO

T/FRAMING = 13'-10 1/2" UNO

PLAN NORTH

A1 **FRAMING PLAN - SALT AND UREA STORAGE**
SCALE: 1/8" = 1'-0"

0 4' 8' 16'

C&S COMPANIES®
C&S Engineers, Inc.
499 Col. Eileen Collins Blvd.
Syracuse, New York 13212
Phone: 315-455-2000
Fax: 315-455-9667
www.cscos.com

CERTIFICATE OF AUTHORIZATION #: 0021365

STATE OF NEW YORK · JOHN W. OBLEMAN · 082000 · LICENSED PROFESSIONAL ENGINEER

REGISTRATION EXPIRES: 5/31/28

HUDSON VALLEY REGIONAL AIRPORT

AIRPORT SUPPORT BUILDINGS
HUDSON VALLEY REGIONAL AIRPORT
263 NEW HACKENSACK ROAD
WAPPINGERS FALLS, NY 12590

MARK	DATE	DESCRIPTION

REVISIONS

PROJECT NO:	128.065.001
DATE:	SEPTEMBER 2026
DRAWN BY:	B. ZUHRIC
DESIGNED BY:	B. ZUHRIC
CHECKED BY:	J. OBLEMAN, PE

NO ALTERATION PERMITTED HEREON EXCEPT AS PROVIDED UNDER SECTION 7209 SUBDIVISION 2 OF THE NEW YORK EDUCATION LAW

SALT AND UREA STORAGE FRAMING PLAN

S-103
SHEET NO. 13/30

Copyright ©

BAR SIZE	F'c = 4000 psi	
	Lhb	0.7Lhb
#3	7	6
#4	9	7
#5	12	8
#6	14	10
#7	17	12
#8	19	13
#9	21	15
#10	24	17
#11	27	19

NOTES:
1. Ldh = DEVELOPMENT LENGTH OF STANDARD HOOKS IN TENSION (INCHES).
2. Ldh = Lhb UNLESS CONDITIONS OF ITEM 3 ARE SATISFIED.
3. Ldh = 0.7Lhb WHEN SIDE COVER NORMAL TO PLANE OF HOOK IS NOT LESS THAN 2 1/2 INCHES AND FOR 90 DEGREE HOOKS, COVER ON BAR EXTENSION BEYOND HOOK IS NOT LESS THAN 2 INCHES.
4. HOOKS SHALL NOT BE CONSIDERED EFFECTIVE FOR DEVELOPING BARS IN COMPRESSION.
5. VALUES SHOWN ARE FOR GRADE 60 BARS. MULTIPLY BY 1.25 FOR GRADE 75 BARS.
6. Ldh SHALL BE MULTIPLIED BY 1.2 FOR EPOXY-COATED HOOKED BARS.

TENSION DEVELOPMENT LENGTHS OF STANDARD HOOKS- NORMAL WEIGHT CONCRETE (GRADE 60 REINFORCING BARS)

BAR SIZE	F'c = 4000 psi	
	CLASS A (1.0 Ld)	CLASS B (1.3 Ld)
#3	12	12
#4	12	15
#5	15	19
#6	17	22
#7	28	37
#8	36	47
#9	44	57
#10	54	70
#11	64	84

NOTES:
1. Ld = TENSION DEVELOPMENT LENGTH.
2. ALL SPLICE LENGTHS ARE IN INCHES.
3. FOR TOP BARS, MULTIPLY SPLICE LENGTHS BY 1.30. TOP BARS REQUIRE A MINIMUM OF 12" FRESH CONCRETE BELOW BAR. FOR TOP REINFORCEMENT IN SLABS 12" THICK OR LESS, USE VALUES IN TABLE.
4. FOR EPOXY-COATED BARS, MULTIPLY SPLICE LENGTHS BY 1.5. THE PRODUCT OF THE TOP BAR MULTIPLIER AND THE EPOXY-COATED BAR MULTIPLIER NEED NOT BE MORE THAN 1.7.
5. WHEN LAP SPLICING BARS OF DIFFERENT SIZES, THE LAP LENGTH IS DETERMINED BY THE SMALLER BAR, BUT MAY NOT BE LESS THAN THE CLASS A SPLICE LENGTH OF THE LARGER BAR.
6. SPLICE LENGTHS ARE BASED OFF A MINIMUM OF 1 1/2" OF COVER.

TENSION DEVELOPMENT AND SPLICE LENGTHS- NORMAL WEIGHT CONCRETE (GRADE 60 REINFORCING BARS)

C1 CONCRETE REINFORCEMENT TENSION DEVELOPMENT AND SPLICE LENGTHS
SCALE: 12" = 1'-0"

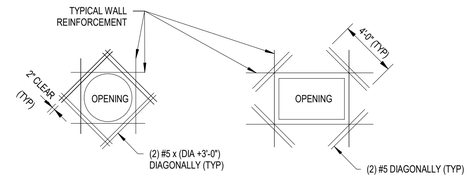

NOTES:
1.) FOR WALLS WITH OPENINGS GREATER THAN 6" IN ANY DIRECTION. PLACE BARS AT EACH FACE FOR WALLS WITH (2) LAYERS OF REINFORCING.
2.) FOR WALLS WITH REINFORCEMENT LARGER THAN #5 BARS, MATCH WALL REINFORCEMENT BAR SIZE.

C3 WALL OPENING REINFORCING DETAIL
SCALE: 3/4" = 1'-0"

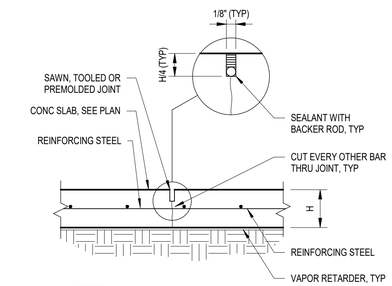

NOTES:
1. JOINT TO BE SAWN WITHIN 12 HOURS AFTER PLACING CONCRETE.
2. PROVIDE CONTROL JOINTS AS SHOWN ON PLAN.

C4 SOG CONTROL JOINT
SCALE: 3/4" = 1'-0"

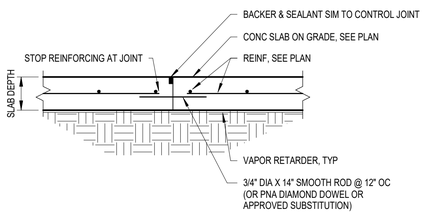

NOTES:

1. CONTRACTOR TO PROVIDE A PROPOSED CONSTRUCTION JOINT LAYOUT PLAN FOR APPROVAL. SEE THE STRUCTURAL GENERAL NOTES FOR LAYOUT GUIDELINES.

B1 SOG CONSTR JOINT
SCALE: 3/4" = 1'-0"

NOTE: PLATE WASHERS WELDED TO THE BASE PLATE ARE REQUIRED PER AISC TABLE 14-2

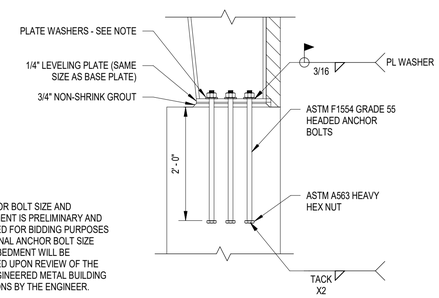

NOTES:
1. ANCHOR BOLT SIZE AND EMBEDMENT IS PRELIMINARY AND PROVIDED FOR BIDDING PURPOSES ONLY. FINAL ANCHOR BOLT SIZE AND EMBEDMENT WILL BE PROVIDED UPON REVIEW OF THE PRE-ENGINEERED METAL BUILDING REACTIONS BY THE ENGINEER.

*** - COORDINATE ANCHOR BOLT LOCATION, SPACING AND PROJECTION WITH THE PEMB DRAWINGS

B2 TYPICAL PEMB ANCHOR BOLT DETAIL
SCALE: 3/4" = 1'-0"

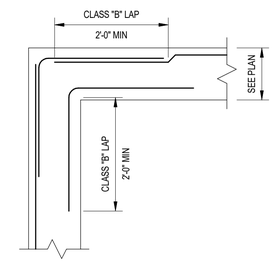

NOTE:

VERTICAL REINFORCING NOT SHOWN FOR CLARITY.

B3 TYPICAL CONCRETE WALL CORNER DETAIL
SCALE: 3/4" = 1'-0"

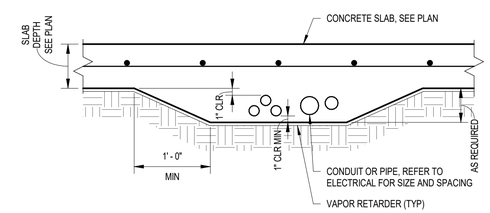

B4 SOG @ CONDUIT
SCALE: 1" = 1'-0"

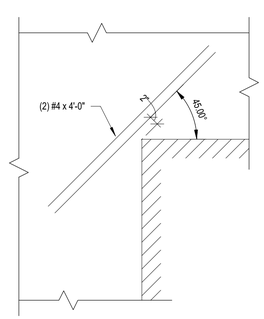

TYP. RE-ENTRANT CORNER

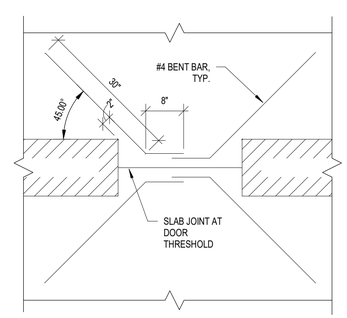

RE-ENTRANT CORNERS AT DOORS

A2 SOG RE-ENTRANT CORNER REINF
SCALE: 3/4" = 1'-0"

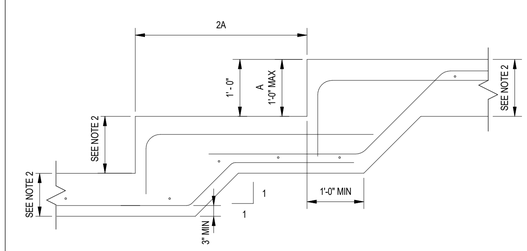

NOTE:
1.) REINFORCING SIZE AND SPACING TO MATCH FOOTING REINFORCEMENT.
2.) THICKNESS TO MATCH CONTINUOUS FOUNDATION. SEE PLAN.

A4 FOUNDATION STEP DETAIL
SCALE: 3/4" = 1'-0"

C&S COMPANIES®
C&S Engineers, Inc.
499 Col. Eileen Collins Blvd.
Syracuse, New York 13212
Phone: 315-455-2000
Fax: 315-455-9667
www.cscos.com

CERTIFICATE OF AUTHORIZATION #: 0021365

STATE OF NEW YORK · JOHN W. OBLEMAN · 082000 · LICENSED PROFESSIONAL ENGINEER

REGISTRATION EXPIRES: 5/31/28

HUDSON VALLEY REGIONAL AIRPORT

AIRPORT SUPPORT BUILDINGS
HUDSON VALLEY REGIONAL AIRPORT
263 NEW HACKENSACK ROAD
WAPPINGERS FALLS, NY 12590

MARK	DATE	DESCRIPTION

REVISIONS

PROJECT NO: 128.065.001
DATE: SEPTEMBER 2026
DRAWN BY: B. ZUHRIC
DESIGNED BY: B. ZUHRIC
CHECKED BY: J. OBLEMAN, PE

NO ALTERATION PERMITTED HEREON EXCEPT AS PROVIDED UNDER SECTION 7209 SUBDIVISION 2 OF THE NEW YORK EDUCATION LAW

TYPICAL DETAILS

S-501
SHEET NO. 14/30

Copyright ©

(F) FOUNDATION SCHEDULE				
MARK	DIMENSIONS			REINFORCING
	"W"	"L"	"H"	
F6	6' - 0"	6' - 0"	1' - 6"	(6) #6 EACH WAY TOP AND BOTTOM
F7	7' - 0"	7' - 0"	1' - 6"	(7) #6 EACH WAY TOP AND BOTTOM

PIER SCHEDULE				
MARK	SIZE (WIDTHxLENGTH)	VERT. REINF.	T/PIER EL.	REF. DETAIL
P1	24 x 24	(8) #8	0' - 8"	C2/S-504
P2	36 x 24	(12) #8	0' - 8"	C3/S-504

C1 FOUNDATION AND PIER SCHEDULE
SCALE: NTS

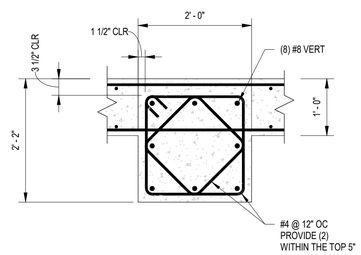

C2 PIER P1
SCALE: 3/4" = 1'-0"

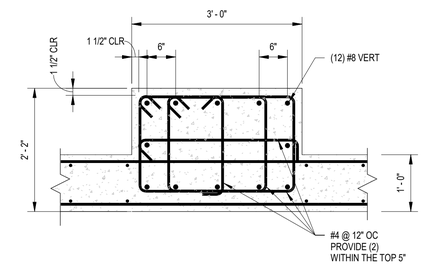

C3 PIER P2
SCALE: 3/4" = 1'-0"

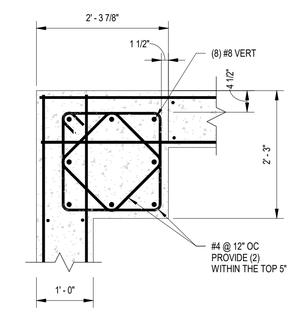

C4 PIER P1 - CORNER DETAIL
SCALE: 3/4" = 1'-0"

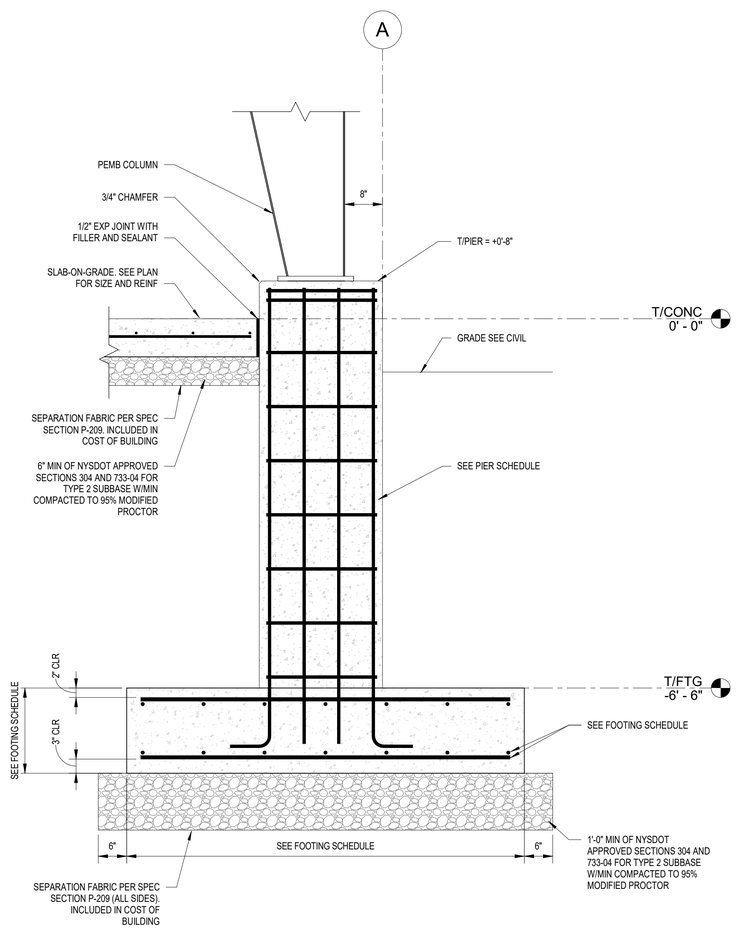

A1 COLD STORAGE COLUMN FOUNDATION
SCALE: 3/4" = 1'-0"

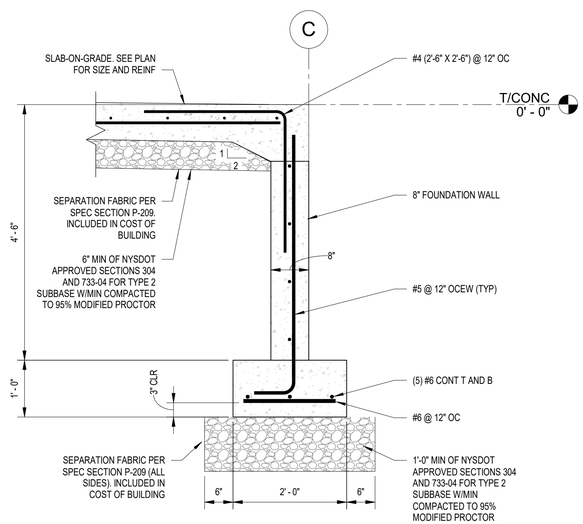

A2 COLD STORAGE OVERHEAD DOOR FOUNDATION
SCALE: 3/4" = 1'-0"

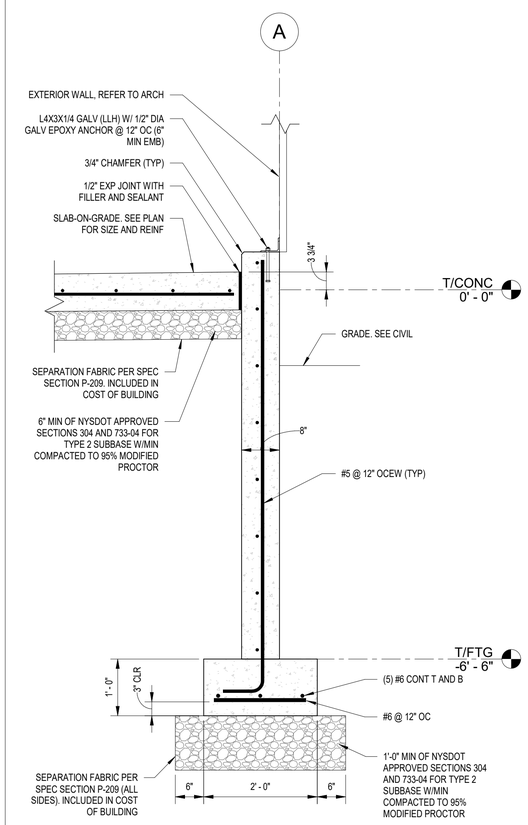

A4 TYP COLD STORAGE FOUNDATION WALL DETAIL
SCALE: 3/4" = 1'-0"

C&S COMPANIES®
C&S Engineers, Inc.
499 Col. Eileen Collins Blvd.
Syracuse, New York 13212
Phone: 315-455-2000
Fax: 315-455-9667
www.cscos.com

CERTIFICATE OF AUTHORIZATION #: 0021365

STATE OF NEW YORK · JOHN W. OBLEMAN · 082000 · LICENSED PROFESSIONAL ENGINEER

REGISTRATION EXPIRES: 5/31/28

HUDSON VALLEY REGIONAL AIRPORT

AIRPORT SUPPORT BUILDINGS
HUDSON VALLEY REGIONAL AIRPORT
263 NEW HACKENSACK ROAD
WAPPINGERS FALLS, NY 12590

MARK	DATE	DESCRIPTION

REVISIONS

PROJECT NO:	128.065.001
DATE:	SEPTEMBER 2026
DRAWN BY:	B. ZUHRIC
DESIGNED BY:	B. ZUHRIC
CHECKED BY:	J. OBLEMAN, PE

NO ALTERATION PERMITTED HEREON EXCEPT AS PROVIDED UNDER SECTION 7209 SUBDIVISION 2 OF THE NEW YORK EDUCATION LAW

DETAILS

S-502
SHEET NO. 15/30

Copyright ©

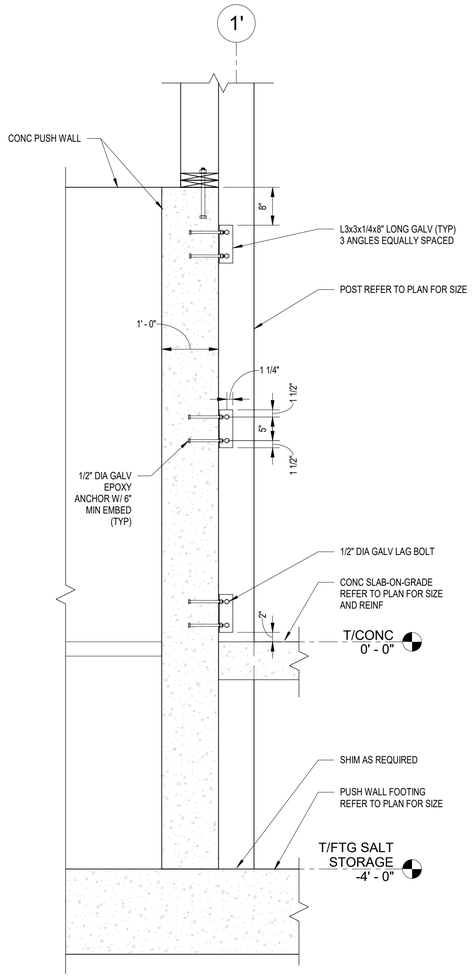

B1 POST TO WALL CONNECTION DETAIL
SCALE: 3/4" = 1'-0"

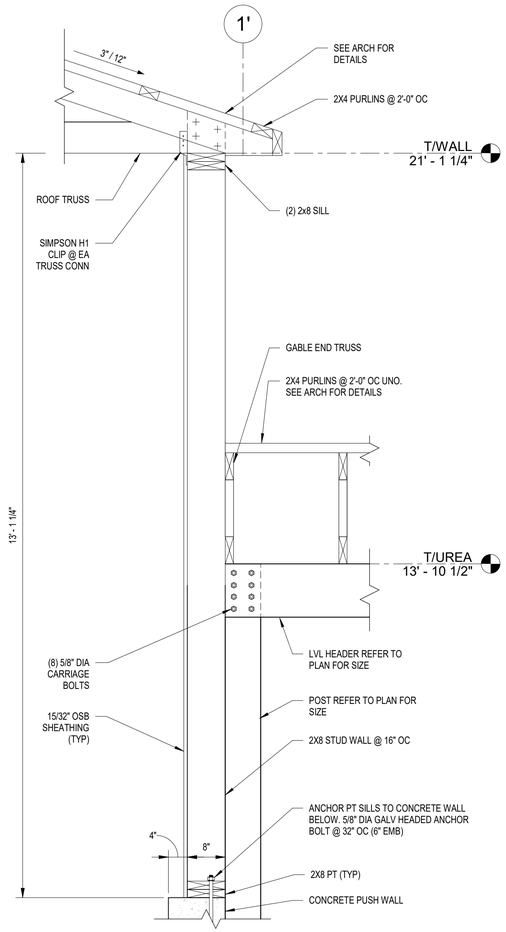

B2 SHEAR WALL FRAMING DETAIL
SCALE: 3/4" = 1'-0"

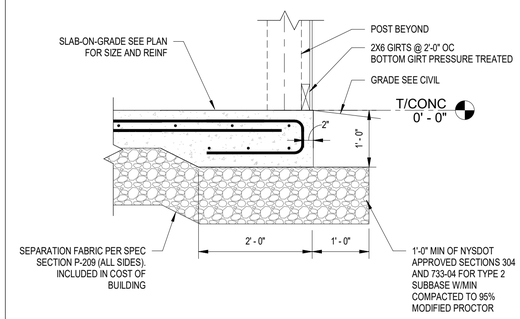

C3 TYP UREA STORAGE THICKENED SLAB EDGE
SCALE: 3/4" = 1'-0"

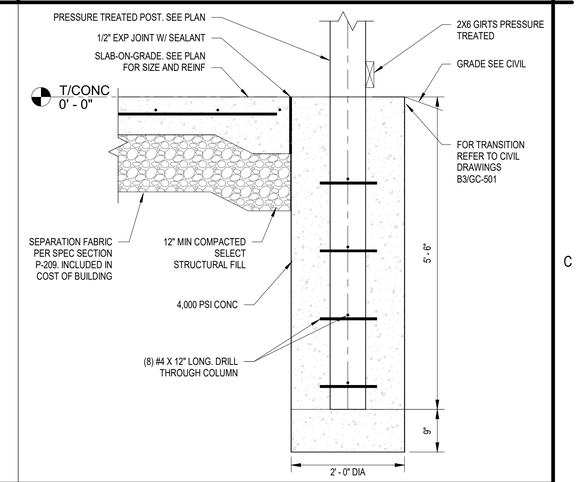

C4 TYP UREA STORAGE POST DETAIL
SCALE: 3/4" = 1'-0"

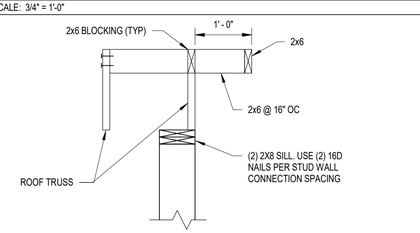

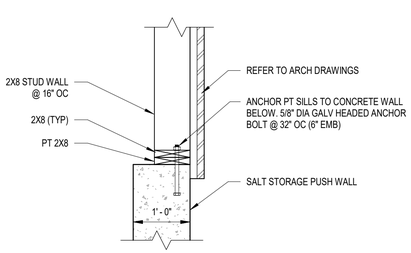

A1 STUD WALL FRAMING
SCALE: 3/4" = 1'-0"

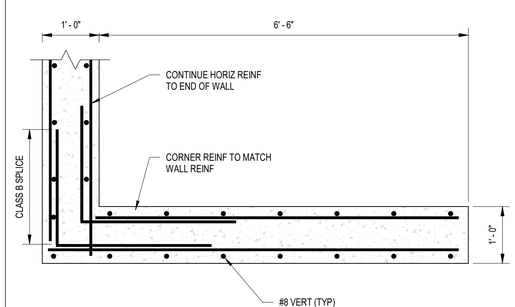

A2 SALT STORAGE END OF WALL DETAIL
SCALE: 3/4" = 1'-0"

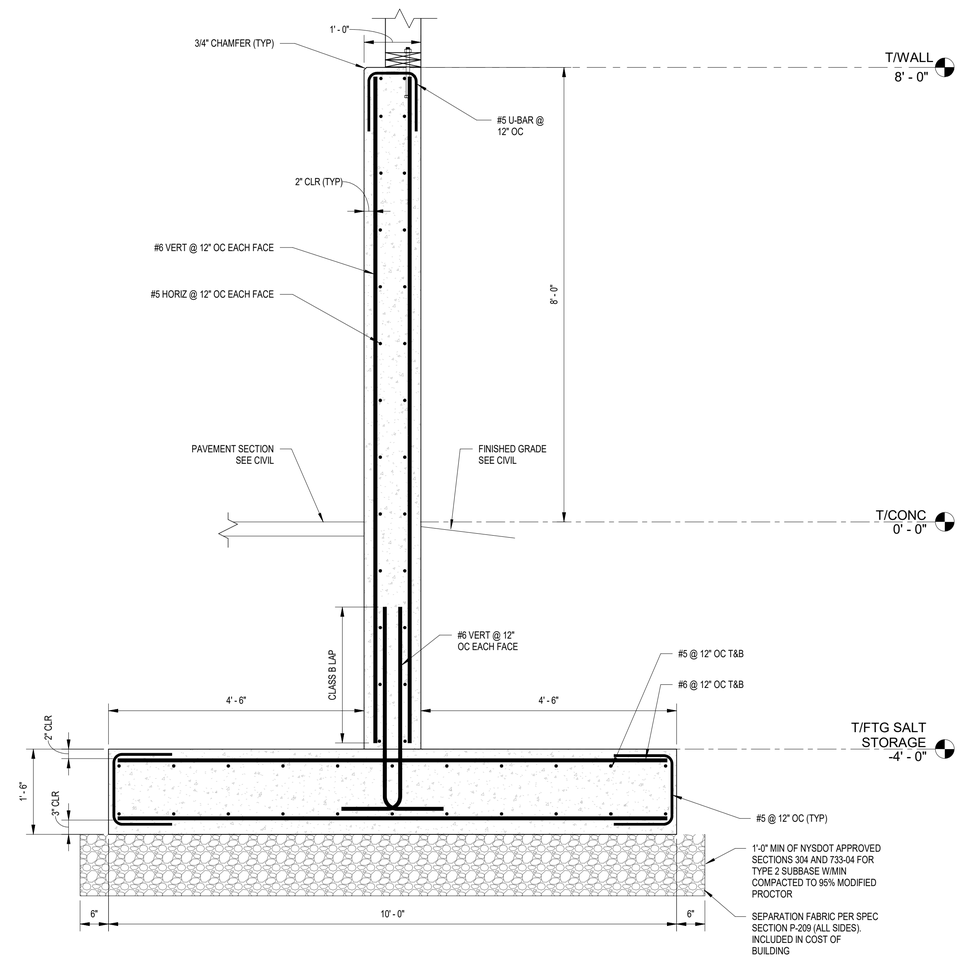

A3 PUSH WALL SECTION
SCALE: 3/4" = 1'-0"

C&S COMPANIES®
C&S Engineers, Inc.
499 Col. Eileen Collins Blvd.
Syracuse, New York 13212
Phone: 315-455-2000
Fax: 315-455-9667
www.cscos.com

CERTIFICATE OF AUTHORIZATION #: 0021365
STATE OF NEW YORK · JOHN W. OBLEMAN · 082000 · LICENSED PROFESSIONAL ENGINEER
REGISTRATION EXPIRES: 5/31/28

HUDSON VALLEY REGIONAL AIRPORT

AIRPORT SUPPORT BUILDINGS
HUDSON VALLEY REGIONAL AIRPORT
263 NEW HACKENSACK ROAD
WAPPINGERS FALLS, NY 12590

MARK	DATE	DESCRIPTION

REVISIONS

PROJECT NO:	128.065.001
DATE:	SEPTEMBER 2026
DRAWN BY:	B. ZUHRIC
DESIGNED BY:	B. ZUHRIC
CHECKED BY:	J. OBLEMAN, PE

NO ALTERATION PERMITTED HEREON EXCEPT AS PROVIDED UNDER SECTION 7209 SUBDIVISION 2 OF THE NEW YORK EDUCATION LAW

DETAILS

S-503
SHEET NO. 16/30

Copyright ©

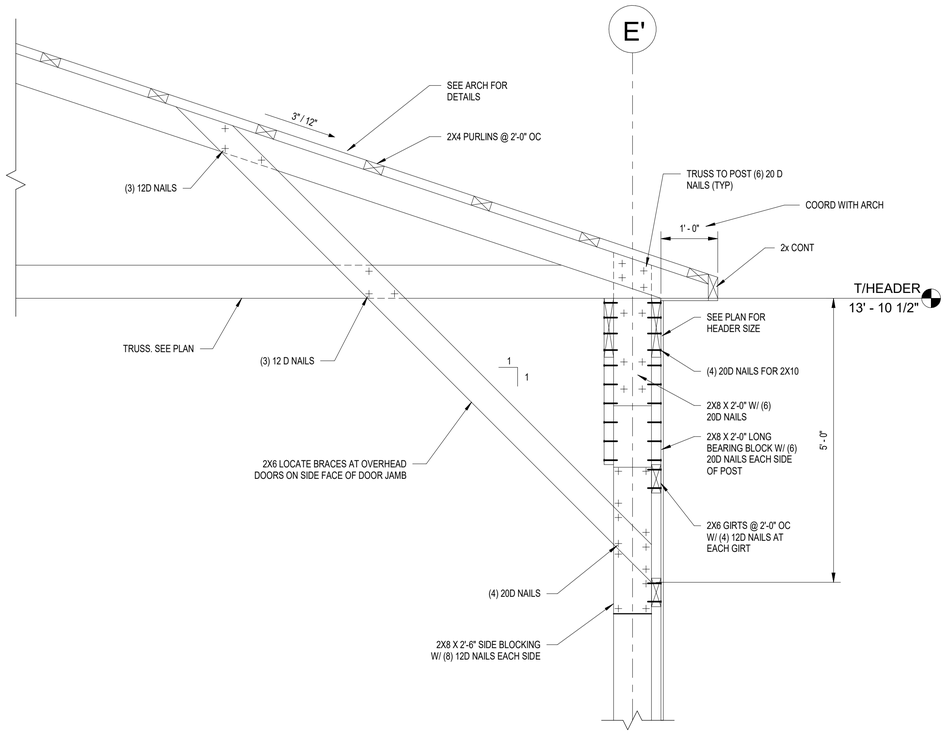

B1 TYPICAL HEADER CONENCTION

SCALE: 3/4" = 1'-0"

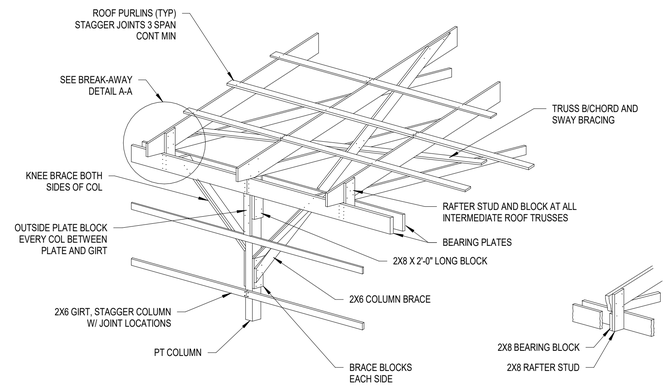

C3 TYPICAL TRUSS CONNECTION DETAIL

SCALE: 1/4" = 1'-0"

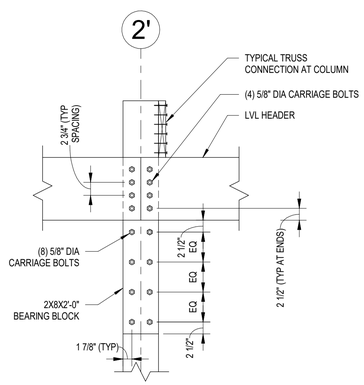

B4 TYP HEADER CONNECTION AT OVERHEAD DOOR

SCALE: 3/4" = 1'-0"

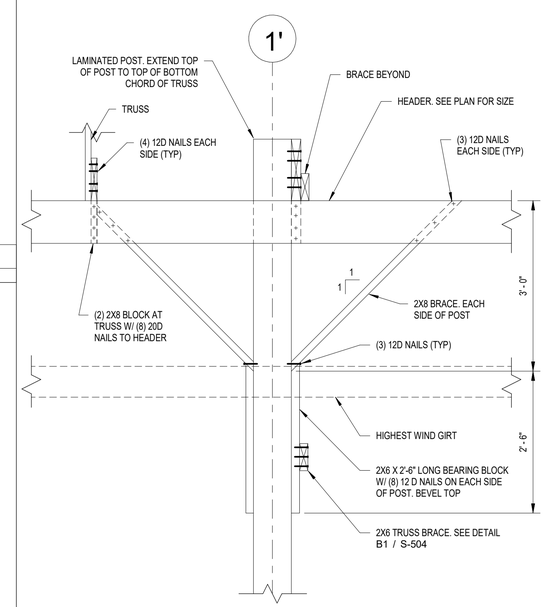

A3 TYPICAL BRACING DETAIL

SCALE: 3/4" = 1'-0"

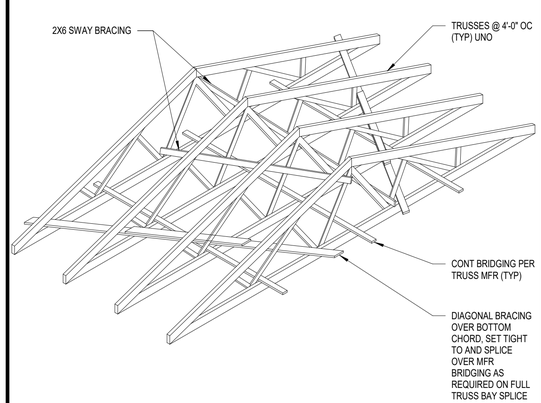

A1 SWAY BRACING DETAIL

SCALE: 3/4" = 1'-0"

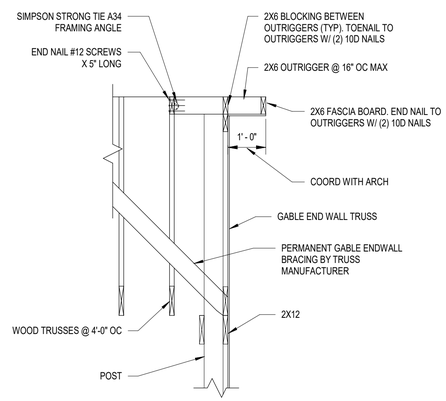

A2 GABLE END ROOF SECTION

SCALE: 1/2" = 1'-0"

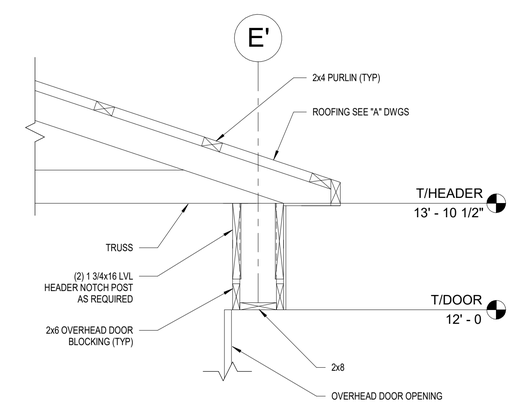

A4 OVERHEAD DOOR HEADER

SCALE: 3/4" = 1'-0"

C&S COMPANIES®
C&S Engineers, Inc.
499 Col. Eileen Collins Blvd.
Syracuse, New York 13212
Phone: 315-455-2000
Fax: 315-455-9667
www.cscos.com

CERTIFICATE OF AUTHORIZATION #: 0021365

STATE OF NEW YORK · JOHN W. OBLEMAN · 082000 · LICENSED PROFESSIONAL ENGINEER

REGISTRATION EXPIRES: 5/31/28

HUDSON VALLEY REGIONAL AIRPORT

AIRPORT SUPPORT BUILDINGS
HUDSON VALLEY REGIONAL AIRPORT
263 NEW HACKENSACK ROAD
WAPPINGERS FALLS, NY 12590

MARK	DATE	DESCRIPTION

REVISIONS

PROJECT NO:	128.065.001
DATE:	SEPTEMBER 2026
DRAWN BY:	B. ZUHRIC
DESIGNED BY:	B. ZUHRIC
CHECKED BY:	J. OBLEMAN, PE

NO ALTERATION PERMITTED HEREON EXCEPT AS PROVIDED UNDER SECTION 7209 SUBDIVISION 2 OF THE NEW YORK EDUCATION LAW

DETAILS

S-504

SHEET NO. 17/30

Copyright ©

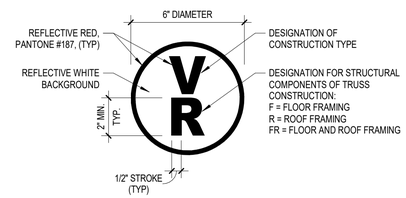

SIGN PLACEMENT SCHEDULE	
SIGN LOCATION	**SIGN PLACEMENT**
EXTERIOR BUILDING ENTRANCE DOORS, EXTERIOR EXIT DISCHARGE DOORS, AND EXTERIOR ROOF ACCESS DOORS	ATTACHED TO THE DOOR, SIDELIGHT OR BUILDING FACE, NOT MORE THAN 12 INCHES HORIZONTALLY FROM THE LATCH SIDE OF THE DOOR JAMB, AND NOT LESS THAN 42 INCHES NOR MORE THAN 60 INCHES ABOVE THE ADJOINING WALKING SURFACE
MULTIPLE CONTIGUOUS EXTERIOR BUILDING ENTRANCE OR EXIT DISCHARGE DOORS	ATTACHED AT EACH END OF THE ROW OF DOORS, AT A MAXIMUM HORIZONTAL DISTANCE OF 12 FEET BETWEEN SIGNS, AND NOT LESS THAN 42 INCHES NOR MORE THAN 60 INCHES ABOVE THE ADJOINING WALKING SURFACE
MULTIPLE CONTIGUOUS EXTERIOR BUILDING ENTRANCE OR EXIT DISCHARGE DOORS	ATTACHED TO THE BUILDING FACE, NOT MORE THAN 12 INCHES HORIZONTALLY FROM THE CENTER LINE OF THE FDC, AND NOT LESS THAN 42 INCHES NOR MORE THAN 60 INCHES ABOVE THE ADJOINING WALKING SURFACE

B3 TRUSS IDENTIFICATION SIGN

SCALE: 3" = 1'-0"

SYMBOL	DESCRIPTION	SYMBOL	DESCRIPTION
0000	STRUCTURAL GRID		LEVEL REFERENCE
SIM A1 A-101	EXTERIOR ELEVATION	A1 / A-101	VIEW REFERENCE
SIM A1 A-101	INTERIOR ELEVATION	ROOM NAME 101 150 SF	ROOM TAG
SIM A1 A-101	BUILDING SECTION	MA3	WALL TAG
SIM A1 A-101	WALL SECTION	101	DOOR TAG
SIM A1 A-101	DETAIL CALLOUT	A	WINDOW TAG
		1	REVISION TAG
			STRUCTURAL GRID LINE
			FINISHED SURFACE LINE
			DEMOLITION LINE
			OVERHEAD/HIDDEN LINE

A2 SYMBOLS LEGEND

SCALE: NOT TO SCALE

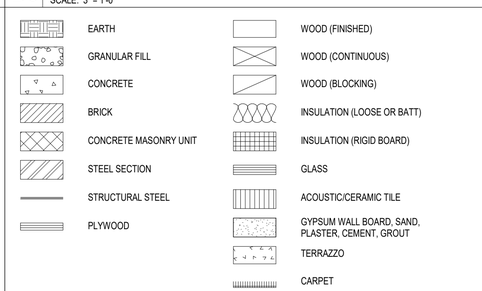

A3 MATERIAL LEGEND

SCALE: 1 : 1

A
AFF ABOVE FINISHED FLOOR
ACT ACOUSTICAL CEILING TILE
AMP ACOUSTICAL METAL PANEL
ALUM ALUMINUM
L ANGLE

B
BLK BLOCK
BD BOARD
BOT BOTTOM
BLDG BUILDING
BL BUILDING LINE

C
CPT CARPET
CLKG CAULK(ING)
CLG CEILING
CBB CEMENTITIOUS BACKER BOARD
CTR CENTER
CL CENTER LINE
CT CERAMIC TILE
CB CHALKBOARD
CLR CLEAR / CLEARANCE
CLOS CLOSET
COL COLUMN
CONC CONCRETE
CMU CONCRETE MASONRY UNIT
CONT CONTINUOUS
CJ CONTROL JOINT
CG CORNER GUARD
CORR CORRIDOR
CTR COUNTER
CRS COURSE(S)

D
DEMO DEMOLISH / DEMOLITION
DET DETAIL
DIA DIAMETER
DIM DIMENSION
DISP DISPENSER
DN DOWN
DWG DRAWING
DF DRINKING FOUNTAIN

E
EA EACH
ELEC ELECTRIC
EWC ELECTRIC WATER COOLER
EL ELEVATION
ELEV ELEVATOR
ENCL ENCLOSURE
ENTR ENTRANCE
ENTR GRL ENTRANCE GRILLE
EQ EQUAL
EQUIP EQUIPMENT
EXH EXHAUST
EXIST EXISTING
ETR EXISTING TO REMAIN
EXP EXPANSION
EJ EXPANSION JOINT
EXP EXPOSED
EXT EXTERIOR

F
FOF FACE OF FINISH
FOM FACE OF MASONRY
FOS FACE OF STUDS
FOW FACE OF WALL
F/F FACE TO FACE
FT FEET/FOOT
FRP FIBER REINFORCED POLYESTER/PLASTIC
FGL FIBERGLASS
FIN FINISH(ED)
FF FINISH FLOOR
FIN GR FINISH GRADE
FA FIRE ALARM
FEC FIRE EXTINGUISHER CABINET
FHC FIRE HOSE CABINET
FP FIRE PROTECTION
FRT FIRE RETARDANT
FP FIREPROOF
FIXT FIXTURE
FLASH FLASHING
FLR FLOOR
FD FLOOR DRAIN
FTG FOOTING
FDTN FOUNDATION
FURN FURNITURE
FBO FURNISHED BY OTHERS
FURG FURRED(ING)

G
GA GAGE / GAUGE
GALV GALVANIZED
GC GENERAL CONTRACTOR
GL GLASS
GL BLK GLASS BLOCK
GL TL GLASS TILE
GB GRAB BAR
GR GRADE
GRL GRILLE
GYP BD GYPSUM BOARD

H
HCP HANDICAPPED
HNDRL HANDRAIL
HDWD HARDWOOD
HT HEIGHT
HP HIGH POINT
HM HOLLOW METAL

I
IRWC IMPACT RESISTANT WALL COVERING
ID INSIDE DIAMETER
INSUL INSULATION / INSULATED
IG INSULATING GLASS
ITG INSULATING TEMPERED GLASS
INT INTERIOR

J
JC JANITOR'S CLOSET

K
KD KNOCKDOWN

L
LAM LAMINATE
LAV LAVATORY
L LENGTH / LONG

L (CON'T)
LF LINEAL FEET
LG LAMINATED GLASS
LLH LONG LEG HORIZONTAL
LLV LONG LEG VERTICAL
LPT LOW POINT

M
MFR MANUFACTURER
MO MASONRY OPENING
MATL MATERIAL
MAX MAXIMUM
MECH MECHANICAL
MTL METAL
MEZZ MEZZANINE
MIN MINIMUM

N
NOM NOMINAL
NA NOT APPLICABLE
NIC NOT IN CONTRACT
NO NUMBER
NTS NOT TO SCALE

O
OC ON CENTER
OPNG OPENING
OPP OPPOSITE
OD OUTSIDE DIAMETER
OH OVERHEAD
OSB ORIENTED STRAND BOARD

P
P PAINT
PR PAIR
PTD PAPER TOWEL DISPENSER
PBD PARTICLE BOARD
PTN PARTITION
PLAS PLASTIC
PLAM PLASTIC LAMINATE
PLBG PLUMBING
PLYWD PLYWOOD
POL POLISHED
POL CONC POLISHED CONCRETE
PVC POLYVINYL CHLORIDE
PT PRESSURE TREATED

Q
QT QUARRY TILE
QTZ QUARTZ

R
R RADIUS (DIM)
REINF REINFORCE
REQD REQUIRED
RB RESILIENT BASE
RF RESILIENT FLOORING
REV REVISION / REVISED
R RISER(S)
RD ROOF DRAIN
RL ROOF LEADER
RTU ROOF TOP UNIT
RM ROOM
RO ROUGH OPENING
RBR RUBBER

S
SCH SCHEDULE(D)
SLNT SEALANT
SLR SEALER
SECT SECTION
SHTHG SHEATHING
SIM SIMILAR
SD SOAP DISPENSER
SAFB SOUND ATTENUATION FIBERGLASS BATT
SPEC SPECIFICATION
SF SQUARE FEET
STN STAIN
SS SOLID SURFACE
SST STAINLESS STEEL
STL STEEL
STOR STORAGE
STRUCT STRUCTURAL
SUSP SUSPENDED
SYS SYSTEM

T
TB TACK BOARD
TG TEMPERED GLASS
TERR TERRAZZO
THK THICKNESS
THRES THRESHOLD
TL TILE
TPTN TOILET PARTITION
T&B TOP AND BOTTOM
TO TOP OF
TOS TOP OF STEEL/SLAB
TOW TOP OF WALL
T&G TONGUE AND GROOVE
T TREAD(S)
TYP TYPICAL

U
UNFIN UNFINISHED
UON UNLESS OTHERWISE NOTED

V
VB VAPOR BARRIER
VR VAPOR RETARDER
VTR VENT THROUGH ROOF
VIF VERIFY IN FIELD
VERT VERTICAL
VEST VESTIBULE
VCT VINYL COMPOSITION TILE
VWB VINYL WALL BASE
VWC VINYL WALL COVERING
VP VISION PANEL

W
WSCT WAINSCOT
W CAB WALL CABINET
WC WATER CLOSET
W WIDE
WG WIRE GLASS
W/ WITH
WM WIRE MESH
WD WOOD
WBL WOOD BLOCKING

A4 ABBREVIATIONS LIST

SCALE: NOT TO SCALE

C&S COMPANIES®
C&S Architects, Engineers & Landscape Architect, LLC
499 Col. Eileen Collins Blvd.
Syracuse, New York 13212
Phone: 315-455-2000
Fax: 315-455-9667
www.cscos.com

CERTIFICATE OF AUTHORIZATION# 023741

REGISTERED ARCHITECT MICHAEL W LAMONTAGNE 031950 STATE OF NEW YORK

REGISTRATION EXPIRES: 5/31/2028

HUDSON VALLEY REGIONAL AIRPORT

AIRPORT SUPPORT BUILDINGS
HUDSON VALLEY REGIONAL AIRPORT
263 NEW HACKENSACK ROAD
WAPPINGERS FALLS, NY 12590

MARK	DATE	DESCRIPTION

REVISIONS

PROJECT NO:	128.065.001
DATE:	SEPTEMBER 2026
DRAWN BY:	A. BRUCE, AIA
DESIGNED BY:	A. BRUCE, AIA
CHECKED BY:	L. M. ROYER, AIA

CONTRACTOR SHALL VERIFY ALL CONDITIONS ON JOB SITE & NOTIFY THE OWNER OF ANY VARIATIONS FROM DIMENSIONS SHOWN ON THESE DRAWINGS BEFORE PROCEEDING WITH ANY CONSTRUCTION.

SYMBOLS, ABBREVIATIONS, AND LEGENDS

A-001

SHEET NO. 18/30

Copyright ©

COLD STORAGE BUILDING

BUILDING CODE OF NEW YORK STATE - CODE ANALYSIS

BUILDING TYPE:	II-B
SPRINKLERED:	NO
OCCUPANCY CLASSIFICATION:	S-2 (LOW HAZARD STORAGE)
TOTAL PROJECT AREA:	3,000 SF

GENERAL BUILDING HEIGHTS AND AREAS	ALLOWED	ACTUAL
BUILDING HEIGHT (TABLE 504.3)	55'	22'
NUMBER OF STORIES (TABLE 504.4)	3	1
BUILDING AREA (TABLE 506.2)	26,000 SF	3,000 SF

TYPES OF CONSTRUCTION	REQUIRED	PROVIDED
STRUCTURAL FRAME	0 HR	0 HR
BEARING WALLS	0 HR	0 HR
NON-BEARING WALLS	0 HR	0 HR
FLOOR CONSTRUCTION	0 HR	0 HR
ROOF CONSTRUCTION	0 HR	0 HR

APPLICABLE CODES

2025 Building Code of NYS
2025 Fire Code of NYS
2025 Plumbing Code of NYS
2025 Mechanical Code of NYS
2025 Fuel Gas Code of NYS
2025 Energy Conservation Construction Code of NYS
2017 ICC A117.1 Accessible And Usable Buildings

INTERIOR FINISHES

GROUP S-2 (TABLE 803.11)	REQUIRED	PROVIDED
EXIT ENCLOSURES AND PASSAGEWAYS	B	-
CORRIDORS	B	-
ROOMS AND ENCLOSED SPACES	C	-

FIRE PROTECTION SYSTEMS

S-2 (SECTION 903.2.10.1)	NOT REQUIRED	NOT PROVIDED

MEANS OF EGRESS	REQUIRED	PROVIDED
NUMBER OF MEANS OF EGRESS (1006.2.1)	1	5
TOTAL EXIT WIDTH (1010.1.1)	32" MIN	900"
MEANS OF EGRESS SIZING (1005.3.2)	32" TOTAL	900"
TRAVEL DISTANCE	300' MAX	70'

LIFE SAFETY OCCUPANCY AND OCCUPANT LOAD CALCULATION

SPACE	FUNCTION (TABLE 1004.5)	GROSS SF	NET SF	SF/PERSON	OCCUPANCY
STORAGE ROOM	ACCESSORY STORAGE	3,000 SF	3,000 SF	300 GROSS	10

RESTROOM FIXTURE CALCULATION - MINIMUM NUMBER OF PLUMBING FACILITIES (NYS BUILDING CODE - TABLE 2902.1)

NOT APPLICABLE - UNHEATED, UNOCCUPIED BUILDING

ENERGY CONSERVATION CONSTRUCTION CODE OF NYS	WAPPINGERS FALLS, NY DUTCHESS COUNTY - CLIMATE ZONE 5A	NOT APPLICABLE - UNHEATED

SALT AND UREA STORAGE BUILDING

BUILDING CODE OF NEW YORK STATE - CODE ANALYSIS

BUILDING TYPE:	V-B
SPRINKLERED:	NO
OCCUPANCY CLASSIFICATION:	S-2 (LOW HAZARD STORAGE)
TOTAL PROJECT AREA:	2,400 SF

GENERAL BUILDING HEIGHTS AND AREAS	ALLOWED	ACTUAL
BUILDING HEIGHT (TABLE 504.3)	40'	22'
NUMBER OF STORIES (TABLE 504.4)	2	1
BUILDING AREA (TABLE 506.2)	13,500 SF	2,400 SF

TYPES OF CONSTRUCTION	REQUIRED	PROVIDED
STRUCTURAL FRAME	0 HR	0 HR
BEARING WALLS	0 HR	0 HR
NON-BEARING WALLS	0 HR	0 HR
FLOOR CONSTRUCTION	0 HR	0 HR
ROOF CONSTRUCTION	0 HR	0 HR

APPLICABLE CODES

2025 Building Code of NYS
2025 Fire Code of NYS
2025 Plumbing Code of NYS
2025 Mechanical Code of NYS
2025 Fuel Gas Code of NYS
2025 Energy Conservation Construction Code of NYS
2017 ICC A117.1 Accessible And Usable Buildings

INTERIOR FINISHES

GROUP S-2 (TABLE 803.11)	REQUIRED	PROVIDED
EXIT ENCLOSURES AND PASSAGEWAYS	B	-
CORRIDORS	B	-
ROOMS AND ENCLOSED SPACES	C	-

FIRE PROTECTION SYSTEMS

S-2 (SECTION 903.2.10.1)	NOT REQUIRED	NOT PROVIDED

MEANS OF EGRESS	REQUIRED	PROVIDED
NUMBER OF MEANS OF EGRESS (1006.2.1)	1	2
TOTAL EXIT WIDTH (1010.1.1)	32" MIN	216"
MEANS OF EGRESS SIZING (1005.3.2)	32" TOTAL	900"
TRAVEL DISTANCE	300' MAX	50'

LIFE SAFETY OCCUPANCY AND OCCUPANT LOAD CALCULATION

SPACE	FUNCTION (TABLE 1004.5)	GROSS SF	NET SF	SF/PERSON	OCCUPANCY
STORAGE ROOM	ACCESSORY STORAGE	2,400 SF	2,400 SF	300 GROSS	8

RESTROOM FIXTURE CALCULATION - MINIMUM NUMBER OF PLUMBING FACILITIES (NYS BUILDING CODE - TABLE 2902.1)

PLUMBING FIXTURES ARE PROVIDED IN ADJACENT SRE/ARFF BUILDING WITHIN 500' TRAVEL DISTANCE.

ENERGY CONSERVATION CONSTRUCTION CODE OF NYS	WAPPINGERS FALLS, NY DUTCHESS COUNTY - CLIMATE ZONE 5A	NOT APPLICABLE - UNHEATED

CODE COMPLIANCE PLAN LEGEND

EXIT ACCESS TRAVEL DISTANCE

FE — FIRE EXTINGUISHER

A1 CODE COMPLIANCE
SCALE: 12" = 1'-0"

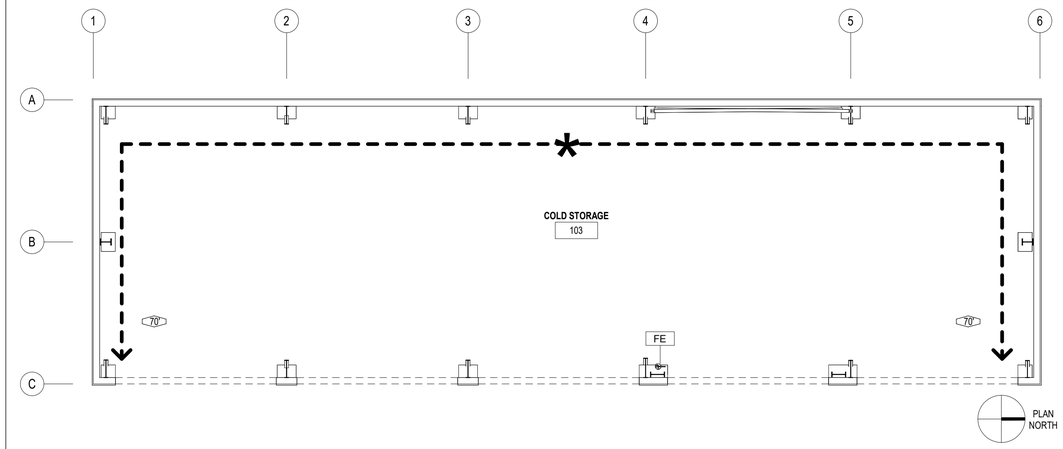

C3 CODE COMPLIANCE PLAN - COLD STORAGE BUILDING
SCALE: 1/8" = 1'-0"

0 4' 8' 16'

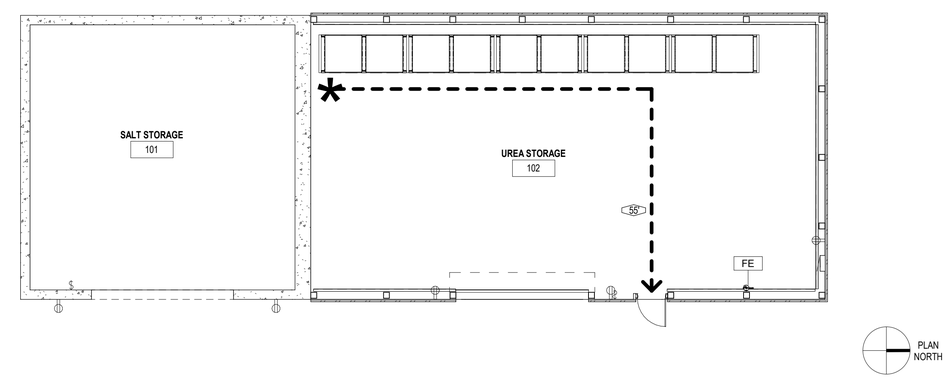

B3 CODE COMPLIANCE PLAN - SALT AND UREA STORAGE BUILDING
SCALE: 1/8" = 1'-0"

0 4' 8' 16'

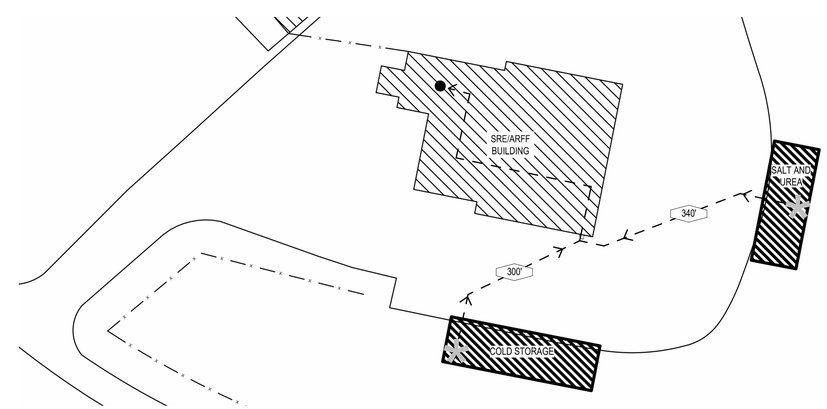

A3 PARTIAL SITE PLAN
SCALE: 1" = 50'-0"

0 4' 8' 16'

C&S COMPANIES®

C&S Architects, Engineers & Landscape Architect, LLC
499 Col. Eileen Collins Blvd.
Syracuse, New York 13212
Phone: 315-455-2000
Fax: 315-455-9667
www.cscos.com

CERTIFICATE OF AUTHORIZATION# 023741

REGISTERED ARCHITECT LIONEL W LAMONTAGNE 031950 STATE OF NEW YORK

REGISTRATION EXPIRES: 5/31/2028

HUDSON VALLEY REGIONAL AIRPORT

AIRPORT SUPPORT BUILDINGS
HUDSON VALLEY REGIONAL AIRPORT
263 NEW HACKENSACK ROAD
WAPPINGERS FALLS, NY 12590

MARK	DATE	DESCRIPTION

REVISIONS

PROJECT NO:	128.065.001
DATE:	SEPTEMBER 2026
DRAWN BY:	L.M.ROYER, AIA
DESIGNED BY:	L.M.ROYER, AIA
CHECKED BY:	L.M.ROYER, AIA

CONTRACTOR SHALL VERIFY ALL CONDITIONS ON JOB SITE & NOTIFY THE OWNER OF ANY VARIATIONS FROM DIMENSIONS SHOWN ON THESE DRAWINGS BEFORE PROCEEDING WITH ANY CONSTRUCTION.

CODE CONFORMANCE PLAN

A-002
SHEET NO. 19/30

Copyright ©

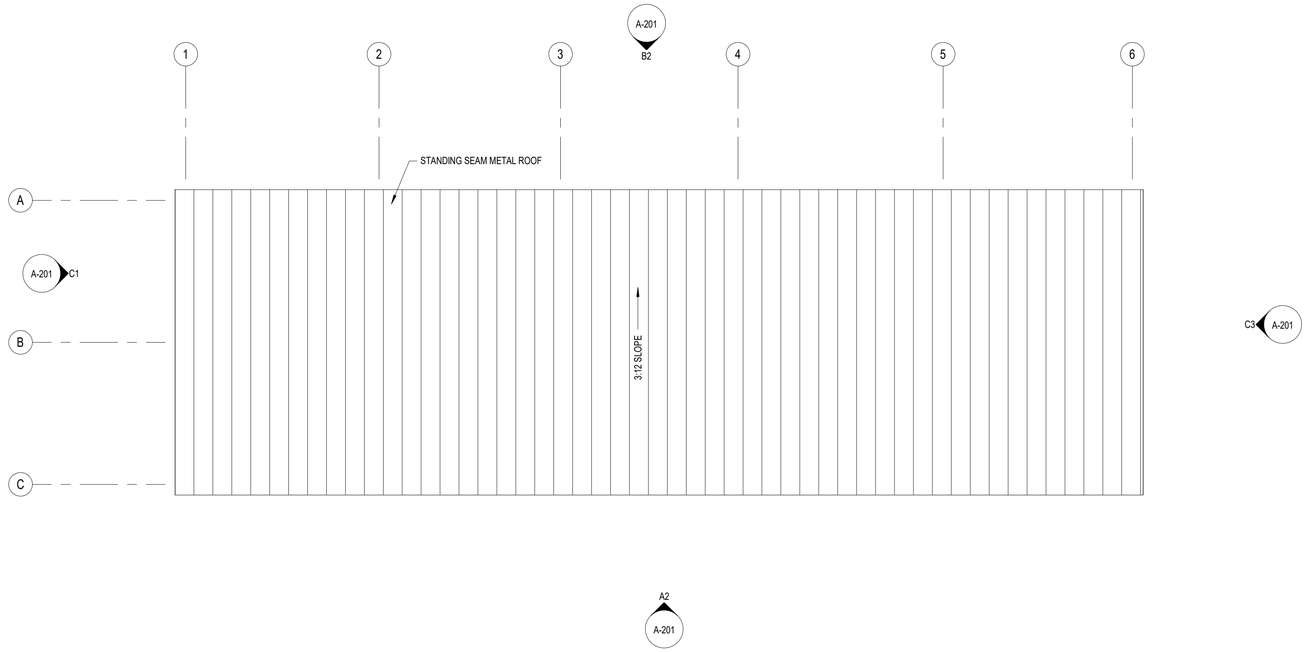

B1 ROOF PLAN - COLD STORAGE BUILDING
SCALE: 1/8" = 1'-0"

0 4' 8' 16'

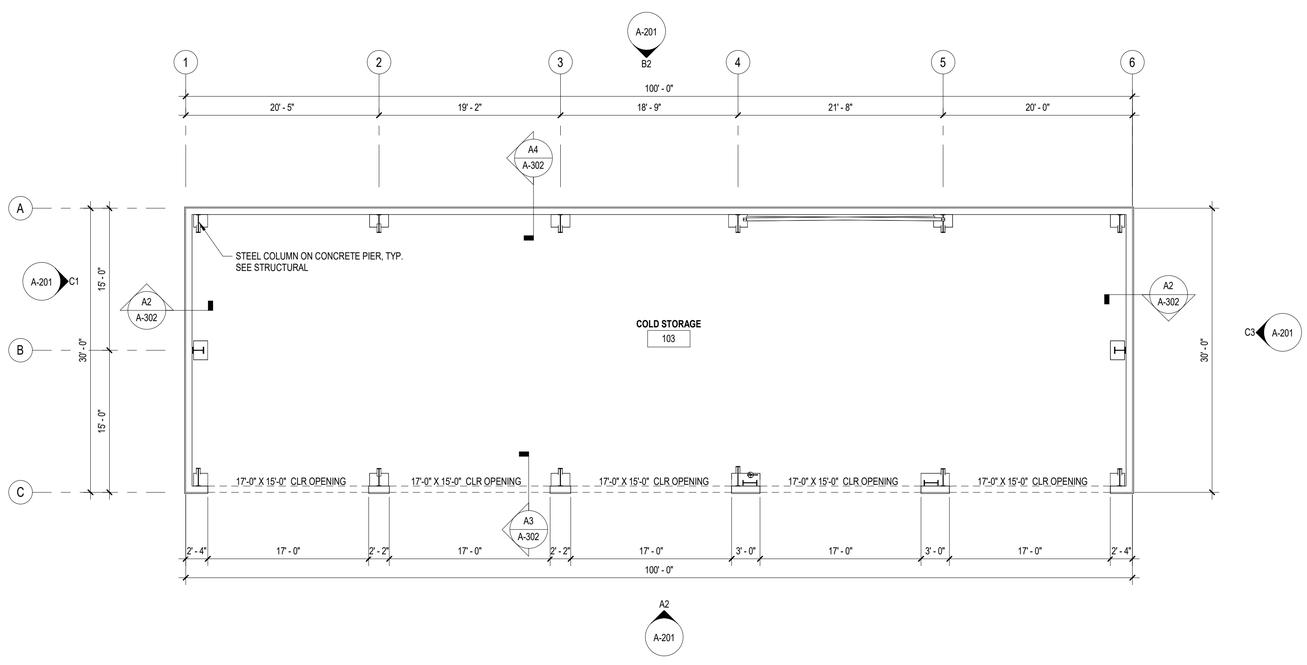

A1 FLOOR PLAN - COLD STORAGE BUILDING
SCALE: 1/8" = 1'-0"

0 4' 8' 16'

C&S COMPANIES®

C&S Architects, Engineers & Landscape Architect, LLC
499 Col. Eileen Collins Blvd.
Syracuse, New York 13212
Phone: 315-455-2000
Fax: 315-455-9667
www.cscos.com

CERTIFICATE OF AUTHORIZATION# 023741

REGISTERED ARCHITECT
MICHAEL W LAMONTAGNE
031950
STATE OF NEW YORK

REGISTRATION EXPIRES: 5/31/2028

HUDSON VALLEY REGIONAL AIRPORT

AIRPORT SUPPORT BUILDINGS
HUDSON VALLEY REGIONAL AIRPORT
263 NEW HACKENSACK ROAD
WAPPINGERS FALLS, NY 12590

MARK	DATE	DESCRIPTION

REVISIONS

PROJECT NO:	128.065.001
DATE:	SEPTEMBER 2026
DRAWN BY:	A. BRUCE, AIA
DESIGNED BY:	A. BRUCE, AIA
CHECKED BY:	L. M. ROYER, AIA

CONTRACTOR SHALL VERIFY ALL CONDITIONS ON JOB SITE & NOTIFY THE OWNER OF ANY VARIATIONS FROM DIMENSIONS SHOWN ON THESE DRAWINGS BEFORE PROCEEDING WITH ANY CONSTRUCTION.

FLOOR PLAN - COLD STORAGE BUILDING

A-101
SHEET NO. 20/30

Copyright ©

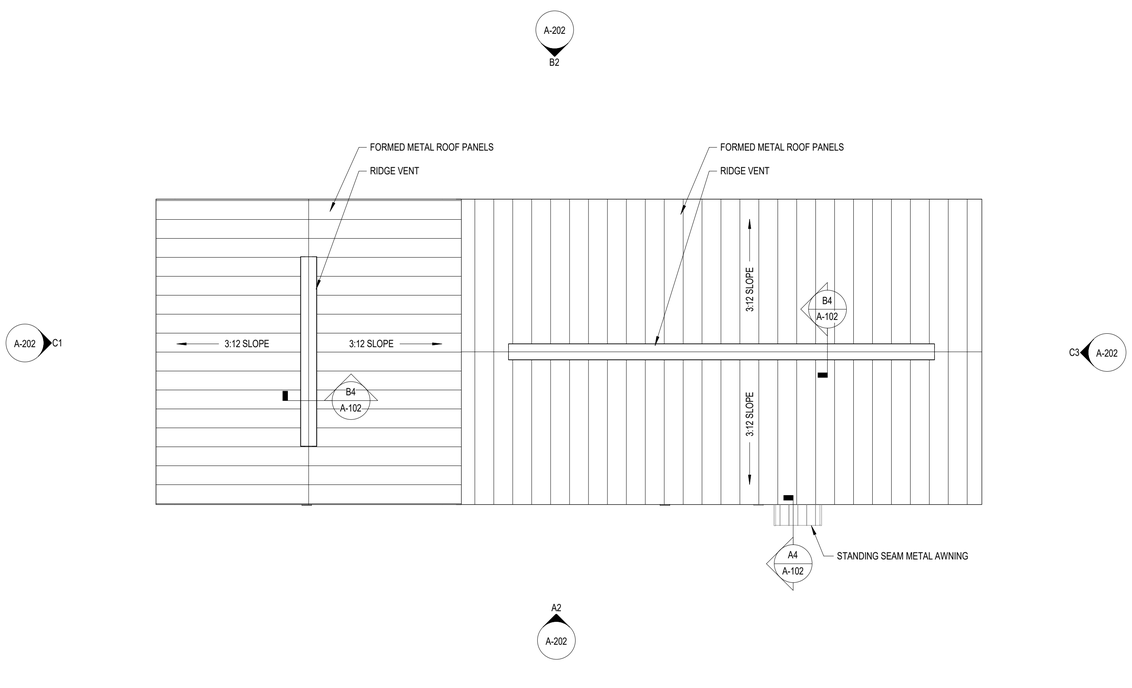

B1 **ROOF PLAN - SALT AND UREA STORAGE BUILDING**
SCALE: 1/8" = 1'-0"

0 4' 8' 16'

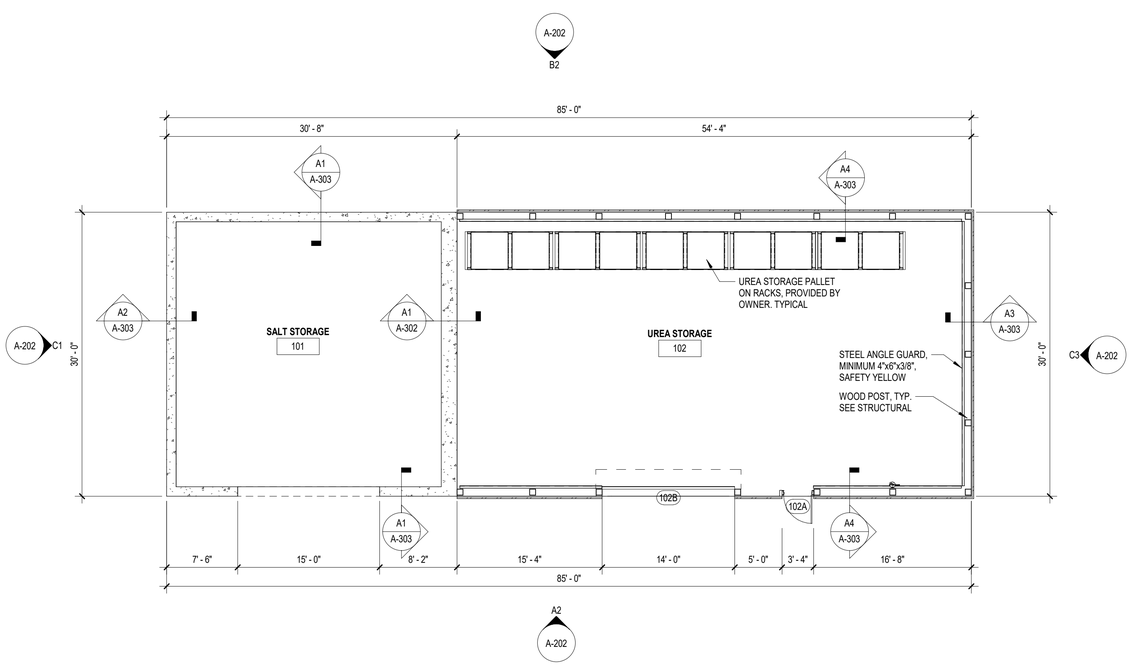

A1 **FLOOR PLAN - SALT AND UREA STORAGE BUILDING**
SCALE: 1/8" = 1'-0"

0 4' 8' 16'

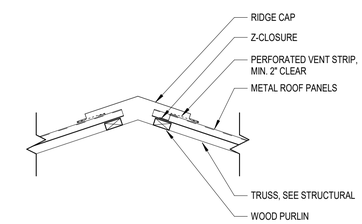

B4 **RIDGE VENT DETAIL**
SCALE: 3/4" = 1'-0"

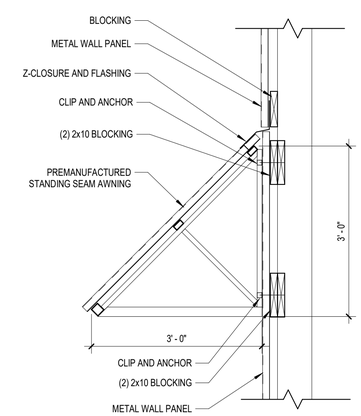

A4 **AWNING SECTION**
SCALE: 3/4" = 1'-0"

C&S COMPANIES®
C&S Architects, Engineers & Landscape Architect, LLC
499 Col. Eileen Collins Blvd.
Syracuse, New York 13212
Phone: 315-455-2000
Fax: 315-455-9667
www.cscos.com

CERTIFICATE OF AUTHORIZATION# 023741

REGISTERED ARCHITECT
MICHAEL W LAMONTAGNE
031950
STATE OF NEW YORK

REGISTRATION EXPIRES: 5/31/2028

HUDSON VALLEY REGIONAL AIRPORT

AIRPORT SUPPORT BUILDINGS
HUDSON VALLEY REGIONAL AIRPORT
263 NEW HACKENSACK ROAD
WAPPINGERS FALLS, NY 12590

MARK	DATE	DESCRIPTION

REVISIONS

PROJECT NO:	128.065.001
DATE:	SEPTEMBER 2026
DRAWN BY:	A. BRUCE, AIA
DESIGNED BY:	A. BRUCE, AIA
CHECKED BY:	L. M. ROYER, AIA

CONTRACTOR SHALL VERIFY ALL CONDITIONS ON JOB SITE & NOTIFY THE OWNER OF ANY VARIATIONS FROM DIMENSIONS SHOWN ON THESE DRAWINGS BEFORE PROCEEDING WITH ANY CONSTRUCTION.

FLOOR PLAN - SALT AND UREA STORAGE BUILDING

A-102
SHEET NO. 21/30

Copyright ©

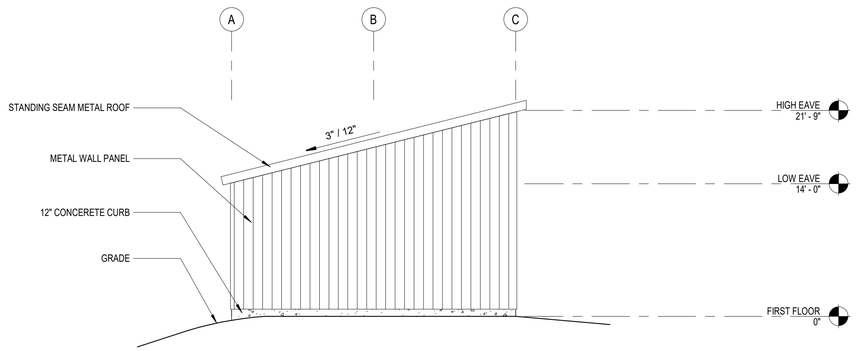

C1 SOUTH ELEVATION - COLD STORAGE BUILDING
SCALE: 1/8" = 1'-0"

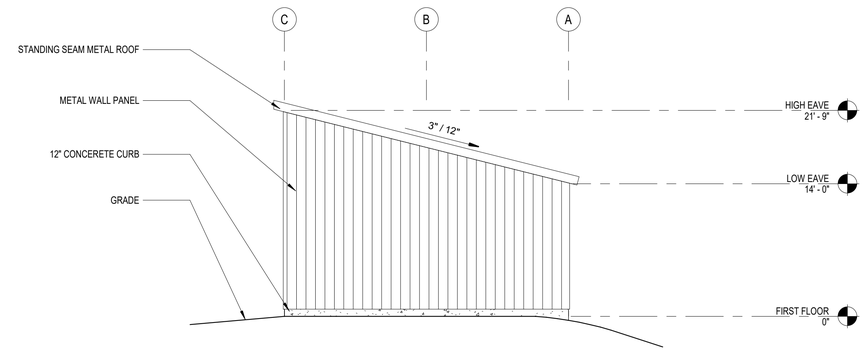

C3 NORTH ELEVATION - COLD STORAGE BUILDING
SCALE: 1/8" = 1'-0"

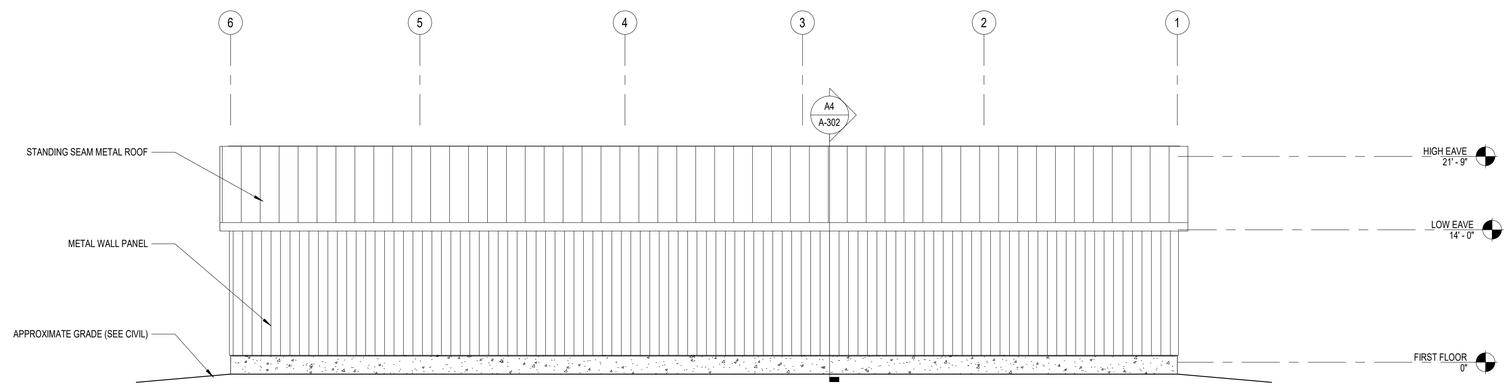

B2 WEST ELEVATION - COLD STORAGE BUILDING
SCALE: 1/8" = 1'-0"

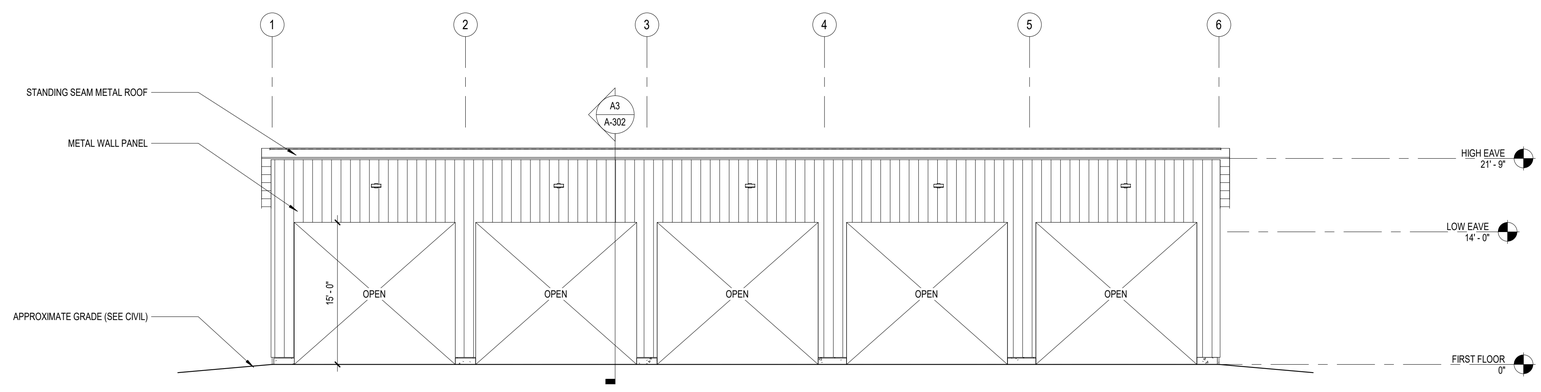

A2 EAST ELEVATION - COLD STORAGE BUILDING
SCALE: 1/8" = 1'-0"

C&S COMPANIES®

C&S Architects, Engineers & Landscape Architect, LLC
499 Col. Eileen Collins Blvd.
Syracuse, New York 13212
Phone: 315-455-2000
Fax: 315-455-9667
www.cscos.com

CERTIFICATE OF AUTHORIZATION# 023741

REGISTERED ARCHITECT
MICHAEL W LAMONTAGNE
031950
STATE OF NEW YORK

REGISTRATION EXPIRES: 5/31/2028

HUDSON VALLEY REGIONAL AIRPORT

AIRPORT SUPPORT BUILDINGS
HUDSON VALLEY REGIONAL AIRPORT
263 NEW HACKENSACK ROAD
WAPPINGERS FALLS, NY 12590

MARK	DATE	DESCRIPTION

REVISIONS

PROJECT NO:	128.065.001
DATE:	SEPTEMBER 2026
DRAWN BY:	A. BRUCE, AIA
DESIGNED BY:	A. BRUCE, AIA
CHECKED BY:	L. M. ROYER, AIA

CONTRACTOR SHALL VERIFY ALL CONDITIONS ON JOB SITE & NOTIFY THE OWNER OF ANY VARIATIONS FROM DIMENSIONS SHOWN ON THESE DRAWINGS BEFORE PROCEEDING WITH ANY CONSTRUCTION.

ELEVATIONS - COLD STORAGE BUILDING

A-201
SHEET NO. 22/30

Copyright ©

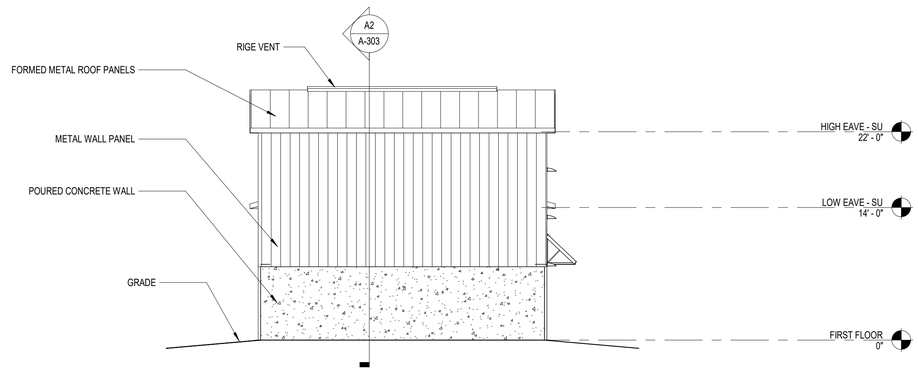

C1 WEST ELEVATION - SALT AND UREA STORAGE BUILDING

SCALE: 1/8" = 1'-0"

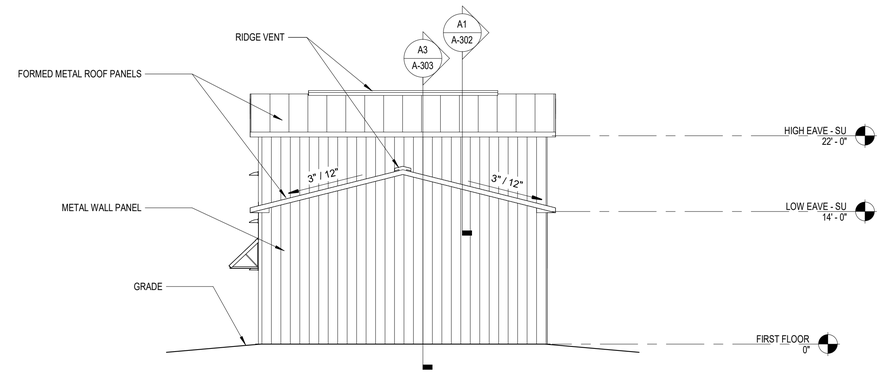

C3 EAST ELEVATION SALT AND UREA STORAGE BUILDING

SCALE: 1/8" = 1'-0"

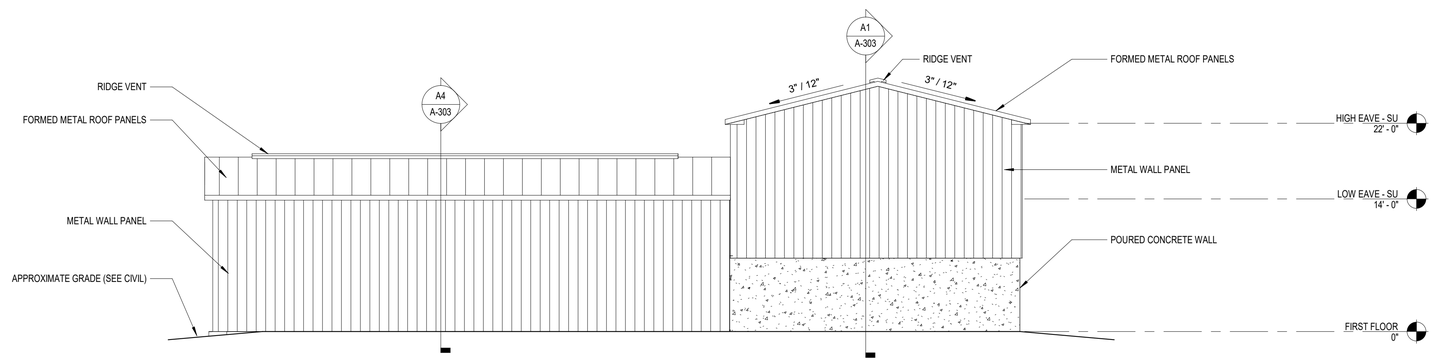

B2 SOUTH ELEVATION - SALT AND UREA STORAGE BUILDING

SCALE: 1/8" = 1'-0"

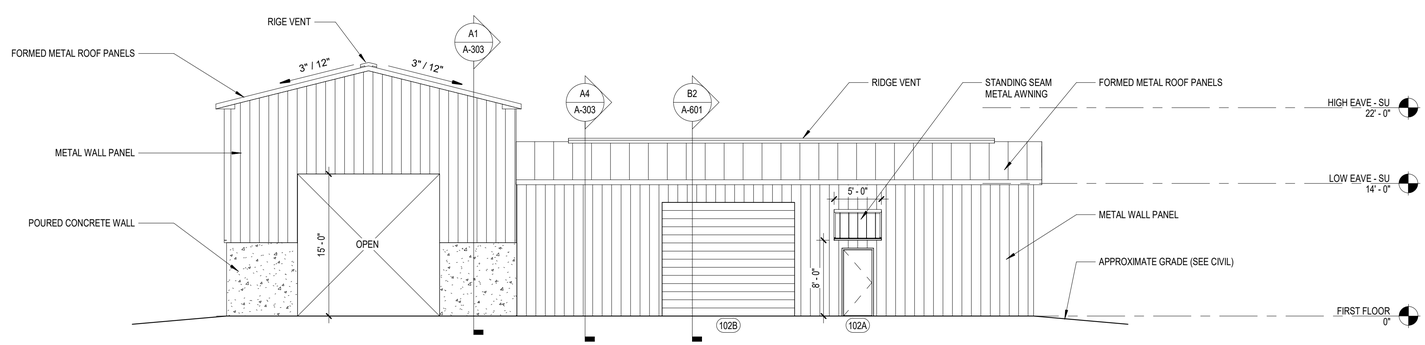

A2 NORTH ELEVATION - SALT AND UREA STORAGE BUILDING

SCALE: 1/8" = 1'-0"

C&S COMPANIES®

C&S Architects, Engineers & Landscape Architect, LLC
499 Col. Eileen Collins Blvd.
Syracuse, New York 13212
Phone: 315-455-2000
Fax: 315-455-9667
www.cscos.com

CERTIFICATE OF AUTHORIZATION# 023741

REGISTERED ARCHITECT
MICHAEL W LAMONTAGNE
031950
STATE OF NEW YORK

REGISTRATION EXPIRES: 5/31/2028

HUDSON VALLEY REGIONAL AIRPORT

AIRPORT SUPPORT BUILDINGS
HUDSON VALLEY REGIONAL AIRPORT
263 NEW HACKENSACK ROAD
WAPPINGERS FALLS, NY 12590

MARK	DATE	DESCRIPTION

REVISIONS

PROJECT NO:	128.065.001
DATE:	SEPTEMBER 2026
DRAWN BY:	A. BRUCE, AIA
DESIGNED BY:	A. BRUCE, AIA
CHECKED BY:	L. M. ROYER, AIA

CONTRACTOR SHALL VERIFY ALL CONDITIONS ON JOB SITE & NOTIFY THE OWNER OF ANY VARIATIONS FROM DIMENSIONS SHOWN ON THESE DRAWINGS BEFORE PROCEEDING WITH ANY CONSTRUCTION.

ELEVATIONS - SALT AND UREA STORAGE BUILDING

A-202

SHEET NO. 23/30

Copyright ©

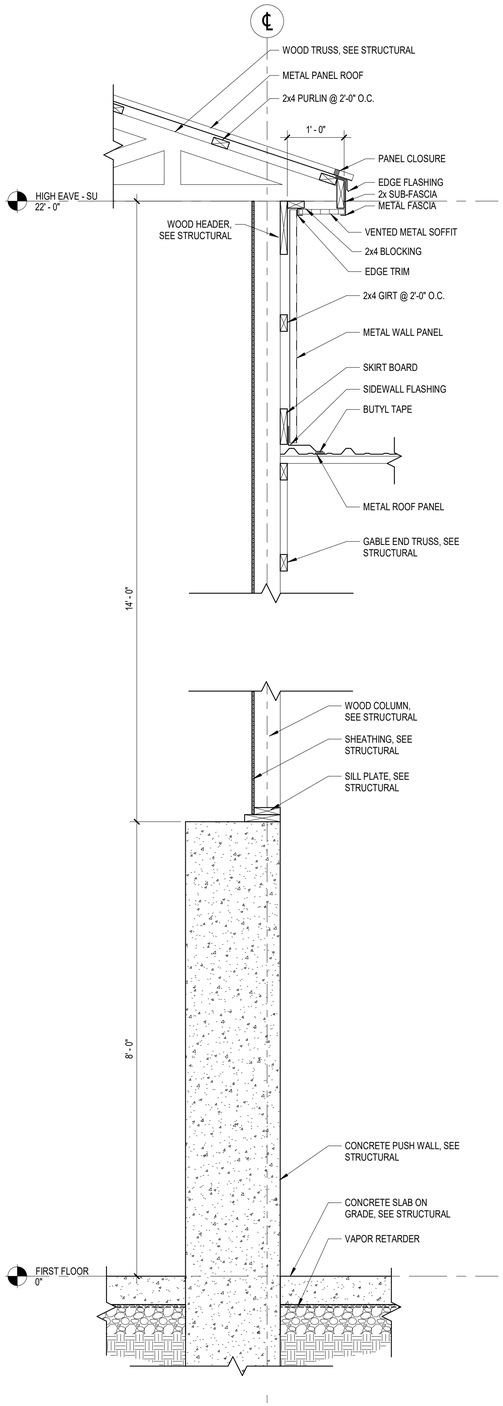

A1 SALT AND UREA STORAGE BUILDING TRANSITION
SCALE: 3/4" = 1'-0"

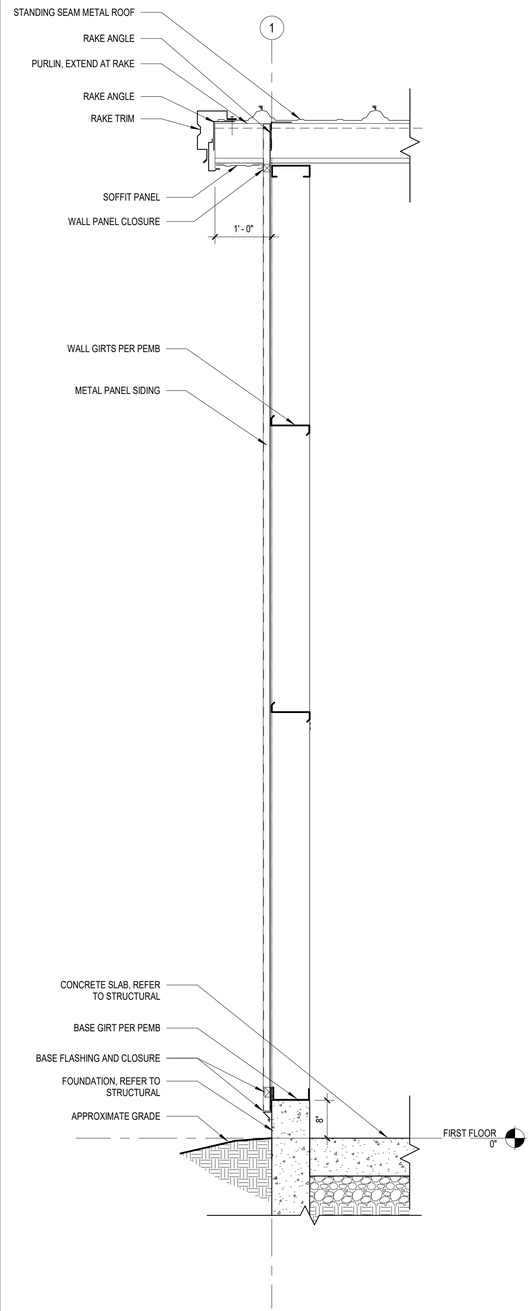

A2 COLD STORAGE BUILDING RAKE SECTION
SCALE: 3/4" = 1'-0"

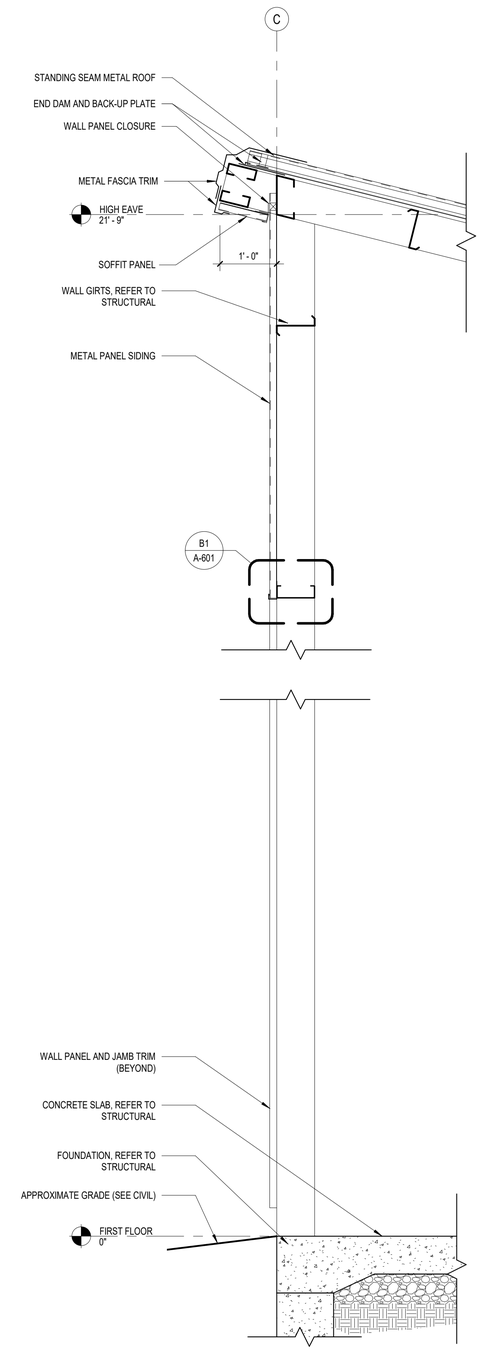

A3 COLD STORAGE BUILDING HIGH EAVE SECTION
SCALE: 3/4" = 1'-0"

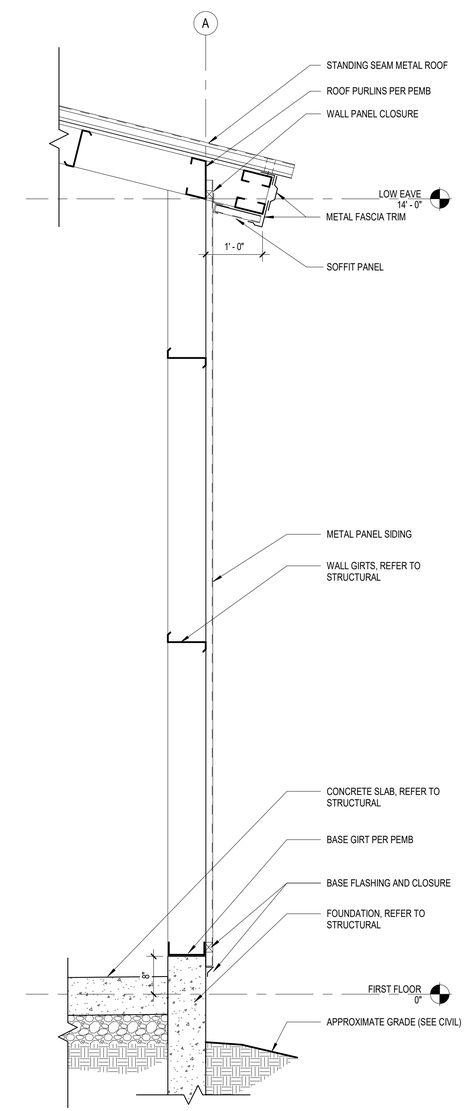

A4 COLD STORAGE BUILDING LOW EAVE SECTION
SCALE: 3/4" = 1'-0"

C&S COMPANIES®
C&S Architects, Engineers & Landscape Architect, LLC
499 Col. Eileen Collins Blvd.
Syracuse, New York 13212
Phone: 315-455-2000
Fax: 315-455-9667
www.cscos.com

CERTIFICATE OF AUTHORIZATION# 023741

REGISTERED ARCHITECT MICHAEL W LAMONTAGNE 031950 STATE OF NEW YORK

REGISTRATION EXPIRES: 5/31/2028

HUDSON VALLEY REGIONAL AIRPORT

AIRPORT SUPPORT BUILDINGS
HUDSON VALLEY REGIONAL AIRPORT
263 NEW HACKENSACK ROAD
WAPPINGERS FALLS, NY 12590

MARK	DATE	DESCRIPTION

REVISIONS

PROJECT NO:	128.065.001
DATE:	SEPTEMBER 2026
DRAWN BY:	A. BRUCE, AIA
DESIGNED BY:	A. BRUCE, AIA
CHECKED BY:	L. M. ROYER, AIA

CONTRACTOR SHALL VERIFY ALL CONDITIONS ON JOB SITE & NOTIFY THE OWNER OF ANY VARIATIONS FROM DIMENSIONS SHOWN ON THESE DRAWINGS BEFORE PROCEEDING WITH ANY CONSTRUCTION.

WALL SECTIONS

A-302
SHEET NO. 24/30

Copyright ©

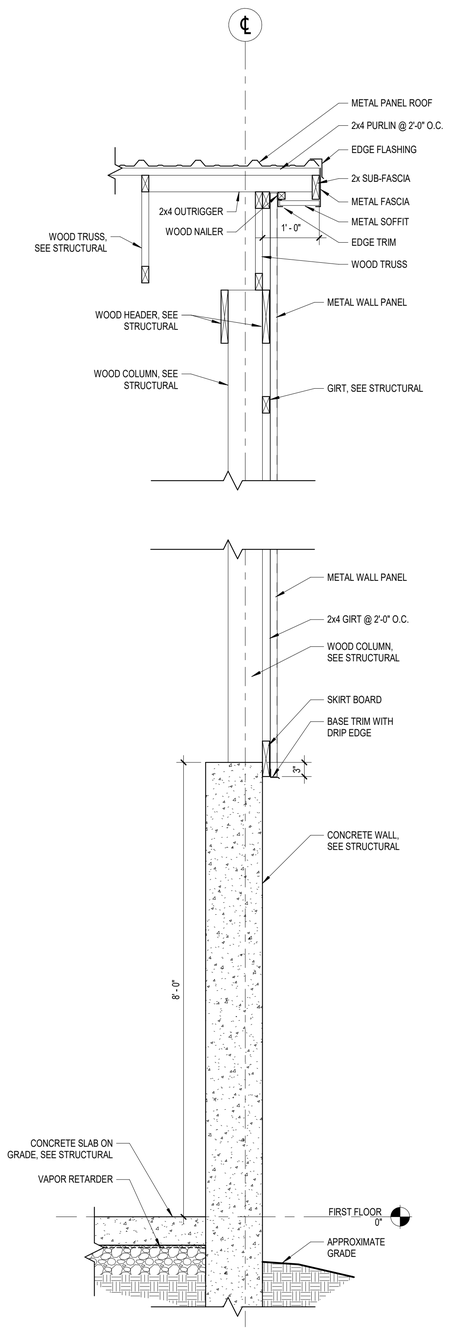

A1 SALT STORAGE BUILDING RAKE SECTION
SCALE: 3/4" = 1'-0"

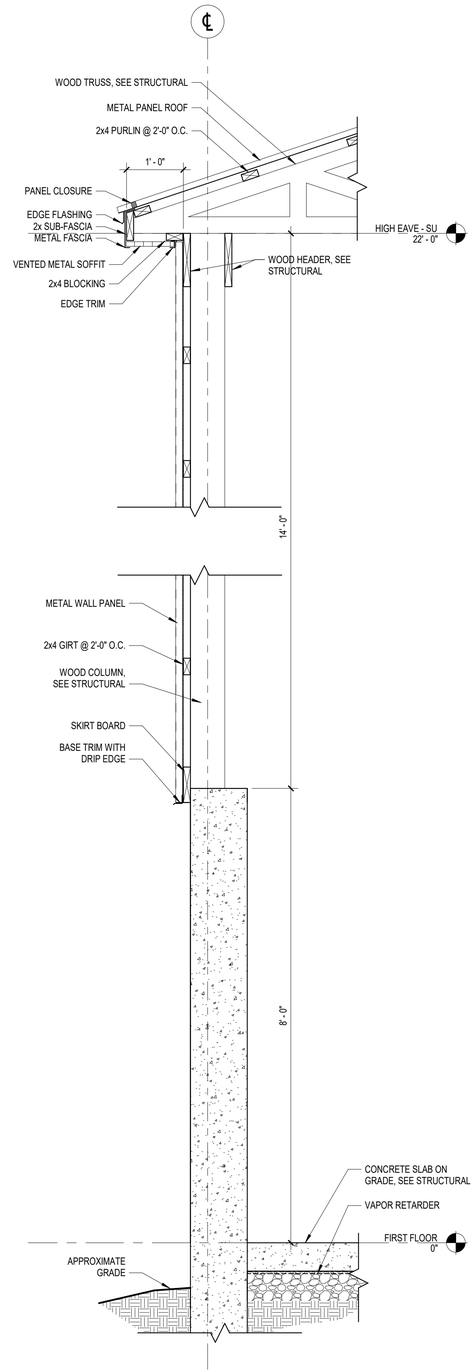

A2 SALT STORAGE BUILDING EAVE SECTION
SCALE: 3/4" = 1'-0"

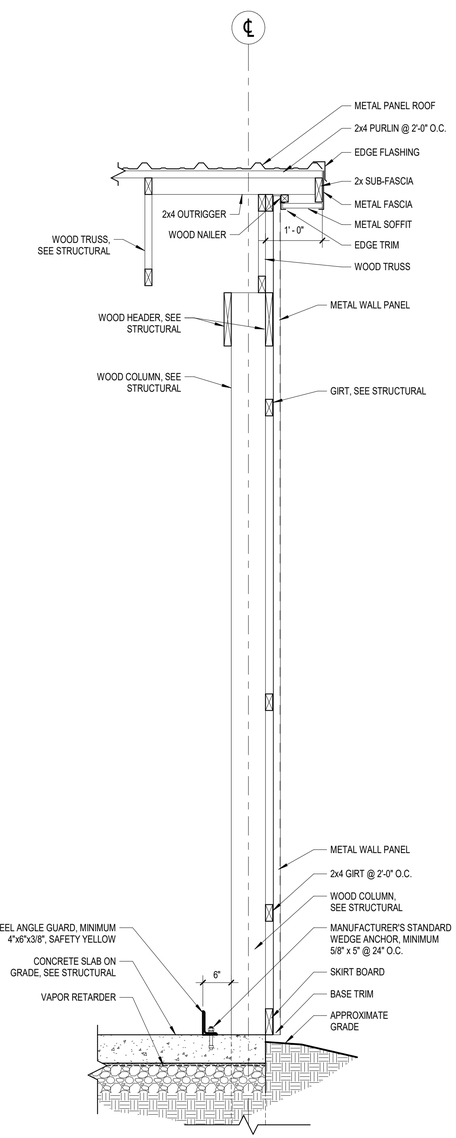

A3 UREA STORAGE BUILDING RAKE SECTION
SCALE: 3/4" = 1'-0"

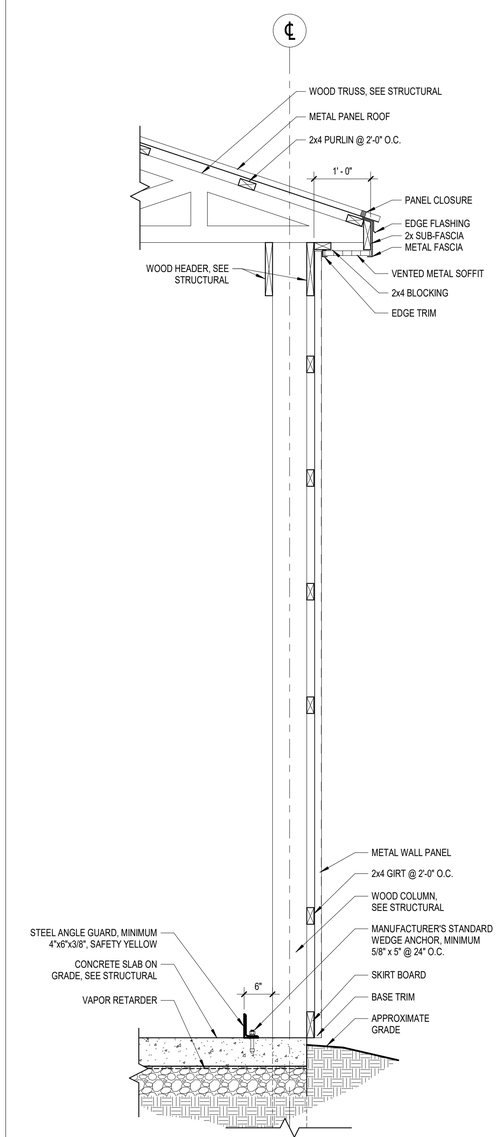

A4 UREA STORAGE BUILDING EAVE SECTION
SCALE: 3/4" = 1'-0"

C&S COMPANIES®
C&S Architects, Engineers & Landscape Architect, LLC
499 Col. Eileen Collins Blvd.
Syracuse, New York 13212
Phone: 315-455-2000
Fax: 315-455-9667
www.cscos.com

CERTIFICATE OF AUTHORIZATION# 023741
REGISTERED ARCHITECT MICHAEL W LAMONTAGNE 031950 STATE OF NEW YORK
REGISTRATION EXPIRES: 5/31/2028

HUDSON VALLEY REGIONAL AIRPORT

AIRPORT SUPPORT BUILDINGS
HUDSON VALLEY REGIONAL AIRPORT
263 NEW HACKENSACK ROAD
WAPPINGERS FALLS, NY 12590

MARK	DATE	DESCRIPTION

REVISIONS

PROJECT NO:	128.065.001
DATE:	SEPTEMBER 2026
DRAWN BY:	A. BRUCE, AIA
DESIGNED BY:	A. BRUCE, AIA
CHECKED BY:	L. M. ROYER, AIA

CONTRACTOR SHALL VERIFY ALL CONDITIONS ON JOB SITE & NOTIFY THE OWNER OF ANY VARIATIONS FROM DIMENSIONS SHOWN ON THESE DRAWINGS BEFORE PROCEEDING WITH ANY CONSTRUCTION.

WALL SECTIONS

A-303
SHEET NO. 24/30

Copyright ©

Hardware Set #1

Qty.	Item
3	Hinge; 4-1/2"x4-1/2"; ANSI A8112
1	Mortise Lock; BHMA A156.13; Function F04 Entry Lock
1	Closer; A156.4; C02011
1	Weather-stripping
1	Door Sweep
1	Threshold; BHMA A156.21; J36190
1	Kick Plate, 8" high

C1 SALT AND UREA STORAGE DOOR HARDWARE SCHEDULE
SCALE: NOT TO SCALE

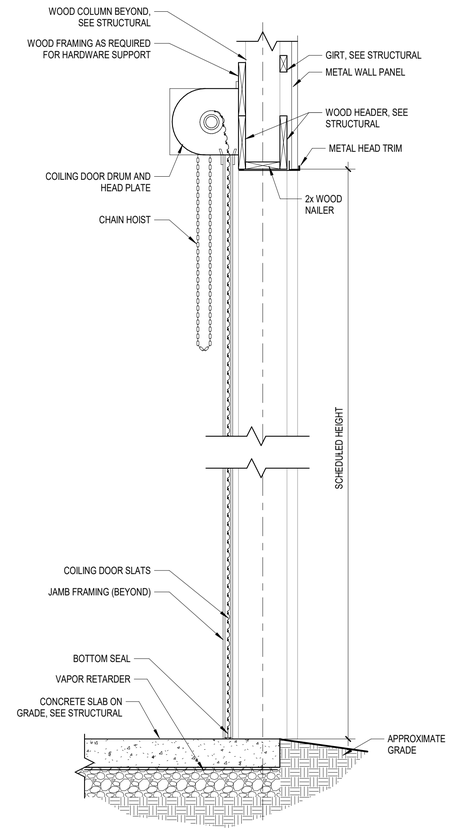

B2 SALT AND UREA BUILDING OVERHEAD DOOR SECTION
SCALE: 3/4" = 1'-0"

DOOR SCHEDULE

DOOR NO.	ROOM NO.	DOOR TYPE	DOOR WIDTH	DOOR HEIGHT	DOOR MATERIAL	DOOR FINISH	FRAME TYPE	FRAME MATERIAL	FRAME FINISH	DETAILS HEAD DETAIL	DETAILS JAMB DETAIL	DETAILS SILL DETAIL	HARDWARE SET	NOTES
102A	102	NLS	3' - 0"	7' - 0"	HM	PT	1	HM	PT	A3/A-601	A4/A-601	A3/A-601	1	
102B	102	OSD	14' - 0"	12' - 0"	STL	FF	-	STL	PT	B2/A-601	A2/A-601	B2/A-601	-	

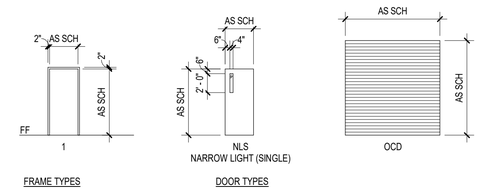

C2 SALT AND UREA BUILDING DOOR AND FRAME TYPES
SCALE: 1/8" = 1'-0"

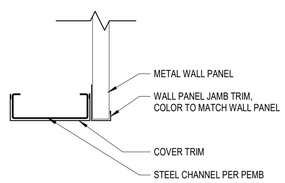

B1 COLD STORAGE BUILDING CLEAR OPENING HEAD
SCALE: 1 1/2" = 1'-0"

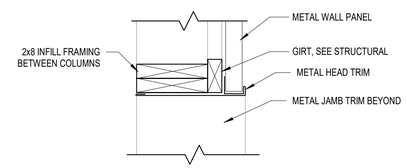

B3 SALT AND UREA BUILDING CLEAR OPENING HEAD
SCALE: 1 1/2" = 1'-0"

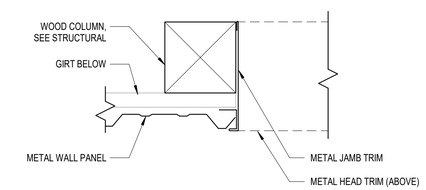

B4 SALT AND UREA BUILDING CLEAR OPENING JAMB
SCALE: 1 1/2" = 1'-0"

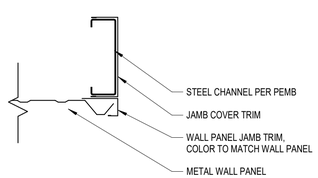

A1 COLD STORAGE BUILDING CLEAR OPENING JAMB
SCALE: 1 1/2" = 1'-0"

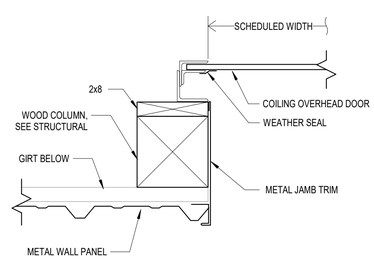

A2 SALT AND UREA BUILDING OVERHEAD DOOR JAMB DETAIL
SCALE: 1 1/2" = 1'-0"

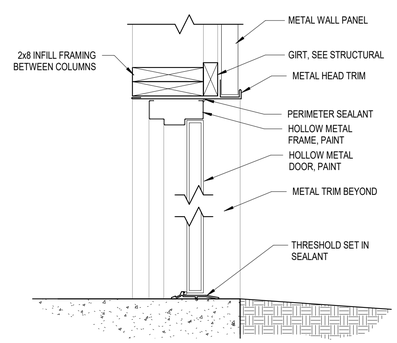

A3 SALT AND UREA BUILDING DOOR HEAD AND SILL DETAILS
SCALE: 1 1/2" = 1'-0"

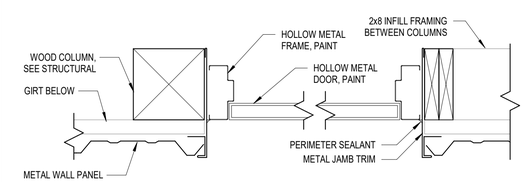

A4 SALT AND UREA BUILDING DOOR JAMB DETAILS
SCALE: 1 1/2" = 1'-0"

C&S COMPANIES®

C&S Architects, Engineers & Landscape Architect, LLC
499 Col. Eileen Collins Blvd.
Syracuse, New York 13212
Phone: 315-455-2000
Fax: 315-455-9667
www.cscos.com

CERTIFICATE OF AUTHORIZATION# 023741
REGISTERED ARCHITECT MICHAEL W LAMONTAGNE 031950 STATE OF NEW YORK
REGISTRATION EXPIRES: 5/31/2028

HUDSON VALLEY REGIONAL AIRPORT

AIRPORT SUPPORT BUILDINGS
HUDSON VALLEY REGIONAL AIRPORT
263 NEW HACKENSACK ROAD
WAPPINGERS FALLS, NY 12590

MARK	DATE	DESCRIPTION

REVISIONS

PROJECT NO:	128.065.001
DATE:	SEPTEMBER 2026
DRAWN BY:	A. BRUCE, AIA
DESIGNED BY:	A. BRUCE, AIA
CHECKED BY:	L. M. ROYER, AIA

CONTRACTOR SHALL VERIFY ALL CONDITIONS ON JOB SITE & NOTIFY THE OWNER OF ANY VARIATIONS FROM DIMENSIONS SHOWN ON THESE DRAWINGS BEFORE PROCEEDING WITH ANY CONSTRUCTION.

SCHEDULES AND DETAILS

A-601
SHEET NO. 26/30

Copyright ©

MASTER LUMINAIRE SCHEDULE LED									
FIXTURE LABEL	MANUFACTURER	MODEL NUMBER	LAMP TYPE	VOLTS	WATTS	LUMENS PER UNIT	COLOR TEMP / CRI	MOUNTING	REMARKS
A	PHOENIX	HDL-3-UNIV-DP-SM-EMB-V2	LED	120	83	8550	5K	SURFACE	
B	PHOENIX	CQL-4-80-CW-120-TE	LED	120	80	9400	5K	SURFACE	
C	LITHONIA LIGHTING	ESXF2-ALO-SWW2-KY-DDB	LED	120	56	3500-7500	5K	SURFACE	PROVIDE WITH PHOTOCELL

GENERAL NOTE:

A. PROVIDE ALL MOUNTING AND CONTROL ACCESSORIES RECOMMENDED BY THE MANUFACTURER FOR A COMPLETE SYSTEM.

C1 MASTER LUMINAIRE SCHEDULE LED

SCALE: NOT TO SCALE

A	AMPERE	L	LENGTH, LONG
A/C	AIR CONDITIONING	LGT	LIGHTING
AC	ALTERNATE CURRENT		
ACCU	AIR COOLED CONDENSING UNIT	MA	MILLIAMPERES
AF	AMPERE FRAME	MBB	MONITOR BREAKOUT BOX
AFF	ABOVE FINISHED FLOOR	MCB	MAIN CIRCUIT BREAKER
AFG	ABOVE FINISHED GRADE	MCC	MOTOR CONTROL CENTER
A/H	AIR HANDLER	MCM	1000 CIRCULAR MILLS
AIC	AMPERE INTERRUPTING CAPACITY	MECH	MECHANICAL
AT	AMPERE TRIP	MIC	MICROPHONE
ATS	AUTOMATIC TRANSFER SWITCH	MIN	MINIMUM
AU	AT UNIT	MISC	MISCELLANEOUS
AUX	AUXILIARY	MLO	MAIN LUGS ONLY
AWG	AMERICAN WIRE GAUGE	MM	MULTI MODE
		MTD	MOUNTED
BC	BARE COPPER		
BFG	BELOW FINISHED GRADE	N/A	NOT APPLICABLE
BRK	BREAKER	NC	NORMALLY CLOSED
BOH	BACK OF HOUSE	NEMA	NATIONAL ELECTRICAL MANUFACTURERS ASS.
		NF	NON-FUSED
C	CONDUIT	NFPA	NATIONAL FIRE PROTECTION ASS.
CA	CABLE	NO	NORMALLY OPEN
CAB	CABINET	NTS	NOT TO SCALE
CAT5E	CATEGORY-5E		
CC	CABLED CONDUCTORS	OLS	OVERLOADS
CH	CHILLER	OC	ON CENTER
CKT	CIRCUIT		
CLL	CONTRACT LIMIT LINE	P	POLE
CMH	COMMUNICATION MANHOLE	PB	PULLBOX
CO	CONDUIT ONLY	PNL	PANEL
COMM	COMMUNICATION	PR	PAIR
CPB	COMMUNICATION PULLBOX	PVC	POLYVINYL CHLORIDE
CT	CURRENT TRANSFORMER	PWR	POWER
CTR	ABOVE COUNTER	POC	POINT OF CONNECTION
CUC	COMMON USER CABLE	POS	POINT OF SALES
CUTC	COMMON USER TERMINAL CABINET	PT	POTENTIAL TRANSFORMER
D	DEEP	REF	REFERENCE
DC	DIRECT CURRENT	REM	REMARKS
DISC	DISCONNECT	RGS	RIGID GALVANIZED STEEL
DN	DOWN	RM	ROOM
DP	DISTRIBUTION PANEL	RMS	ROOT-MEAN-SQUARE
DPST	DOUBLE POLE SINGLE THROW	RCPT	RECEPTACLE
DPDT	DOUBLE POLE DOUBLE THROW		
		SBB	SOUND BREAKOUT BOX
EC	ELECTRICAL CONTRACTOR	SDB	SOUND DISTRIBUTION BOX
EER	ELECTRICAL EQUIPMENT ROOM	SLC	SIGNALING LINE CIRCUIT
ELECT	ELECTRICAL	SM	SINGLE MODE
ELEV	ELEVATION	SPECS	SPECIFICATIONS
EMT	ELECTRICAL METALLIC TUBING	SPKR	SPEAKER
EQUIP	EQUIPMENT	SPST	SINGLE POLE SINGLE THROW
EXIST	EXISTING	SPDT	SINGLE POLE DOUBLE THROW
		SR	SOUND RACK
F	FUSE	SST	STAINLESS STEEL
FA	FIRE ALARM	ST	SHUNT TRIP
FACP	FIRE ALARM CONTROL PANEL	SW	SWITCH
FAT	FIRE ALARM TERMINATION	SWBD	SWITCHBOARD
FBO	FURNISHED BY OWNER		
FD/SD	FIRE DAMPER / SMOKE DETECTOR	TEL	TELEPHONE
FDR	FEEDER	TP	TWISTED PAIR CABLE
FLA	FULL LOAD AMPERES	TTB	TELEPHONE TERMINAL BOARD
		TYP	TYPICAL
GC	GENERAL CONTRACTOR		
GFI	GROUND FAULT INTERRUPT	UON	UNLESS OTHERWISE NOTED
GND	GROUND		
		V	VOLT
H	HIGH	VFD	VARIABLE FREQUENCY DRIVE
HP	HORSEPOWER		
HZ	HERTZ	W	WATT, WIRE, WIDE
		WP	WEATHERPROOF
I/C	INTERCOM		
IG	ISOLATED GROUND	XFMR	TRANSFORMER
IMC	INTERMEDIATE METAL CONDUIT	XP	EXPLOSION PROOF
JB	JUNCTION BOX		
KA	KILOAMP		
KV	KILOVOLT		
KVA	KILOVOLT AMPERES		
KW	KILOWATT		
KWH	KILOWATT HOUR		
KWHD	KILOWATT HOUR DEMAND METER		

A1 ABBREVIATIONS

SCALE: NOT TO SCALE

1. ALL ELECTRICAL WORK SHALL CONFORM TO ALL STATE, LOCAL, AND NATIONAL ELECTRICAL CODES.
2. ELECTRICAL CHARACTERISTICS SHALL BE VERIFIED WITH EQUIPMENT MANUFACTURER.
3. ITEMS OF SPECIFIC MANUFACTURERS SHALL BE INSTALLED IN STRICT ACCORDANCE WITH MANUFACTURER'S PRINTED INSTRUCTIONS AND/OR MANUFACTURER'S REPRESENTATIVE'S DIRECTIONS.
4. THE CONTRACTOR SHALL FIELD VERIFY ALL LOCATIONS AND DIMENSIONS SHOWN ON DRAWINGS
5. ALL CONDUIT AND WIRING SCHEDULES SHALL BE VERIFIED BEFORE INSTALLATION.
6. THE ELECTRICAL CONTRACTOR SHALL COORDINATE THE INSTALLATION OF ALL EQUIPMENT WITH OTHER CONTRACTORS.
7. ALL AREAS DISTURBED BY WORK SHALL BE RESTORED TO A CONDITION EQUAL TO OR BETTER THAN ORIGINAL AS DETERMINED BY THE ENGINEER.
8. THE CONTRACTOR SHALL PROVIDE RACEWAYS, WIRING, AND CONNECTIONS FOR ALL CONTROL CIRCUITS AND INTERLOCK.
9. ALL ELECTRICAL CONDUIT AND CONDUCTORS DISCONNECTED AND NOT TO BE REUSED SHALL BE REMOVED.
10. CONTRACTOR SHALL FIELD VERIFY ALL EXISTING CONDITIONS BEFORE STARTING WORK. IF ONLY A PORTION OF AN EXISTING CIRCUIT IS BEING REMOVED FOR DEMOLITION, CONTINUITY SHALL BE MAINTAINED TO THE REST OF THE REMAINING CIRCUIT.
11. ALL BRANCH CIRCUIT CONDUCTORS SHALL BE #12AWG UNLESS OTHERWISE SHOWN.
12. ALL BRANCH CIRCUITS SHALL CONSIST OF 2 CONDUCTORS PLUS GROUND, UNLESS OTHERWISE SHOWN.

B2 ELECTRICAL GENERAL NOTES

SCALE: NOT TO SCALE

ONE-LINE SYMBOLS	
	CIRCUIT BREAKER (TICKS INDICATE NUMBER OF POLES)
	TRANSFORMER
	GROUND
	CONNECTION POINT OR CABLE SPLICE

B3 ONELINE SYMBOLS

SCALE: NOT TO SCALE

PLAN SYMBOLS	
	EXISTING WORK LINETYPE DEMOLITION WORK LINETYPES NEW WORK LINETYPE
XX	DUPLEX RECEPTACLE, MOUNT AT 18" AFF UNLESS NOTATION INDICATES OTHERWISE. GFI = GROUND FAULT CIRCUIT INTERRUPTER, MOUNT AT 48" AFF UNLESS OTHERWISE NOTED WP = GFI WITH WEATHERPROOF COVER, MOUNT AT 48" AFF UNLESS OTHERWISE NOTED
	SPECIAL RECEPTACLE
XX	SINGLE POLE SWITCH, UNLESS NOTATION INDICATES OTHERWISE. 3 = THREE-WAY SWITCH
PC	PHOTO CELL FOR EXTERIOR LIGHTING CONTROL
	FUSED DISCONNECT SWITCH
	NON FUSED DISCONNECT SWITCH
J	JUNCTION BOX
	ELECTRICAL MOTOR (SEE EQUIPMENT CONNECTION SCHEDULE)
	PANEL BOARD, REFER TO PANEL BOARD SCHEDULE
XXX	BRANCH CIRCUIT HOME RUN WITH CIRCUIT NUMBER SEE PANEL SCHEDULES FOR DETAILS
A	1'X4' LUMINAIRE, LETTER DENOTES TYPE, SEE LUMINAIRE SCHEDULE NL = NIGHT LIGHT
OS	CEILING MOUNTED OCCUPANCY SENSOR
MH	MANHOLE
HH	HANDHOLE
UE	UNDERGROUND ELECTRIC

B4 PLAN SYMBOLS

SCALE: NOT TO SCALE

GENERAL NOTES:

A. REFER TO ELECTRICAL SITE PLAN AND DRAWINGS FOR ADDITIONAL INFORMATION.

B. COORDINATE ALL PULLBOX LOCATIONS AND CONDUIT ROUTING IN ARFF BUILDING WITH OWNER PRIOR TO ROUGH-IN.

C. PROVIDE PANELBOARD PP1. MAKE AND MODEL SHALL BE EATON XLPB-C-P-2-3 OR APPROVED EQUAL.

D. PROVIDE PANELBOARD PP2. MAKE AND MODEL SHALL BE EATON XLPB-C-P-2-1 OR APPROVED EQUAL.

E. WHERE LUGS CANNOT ACCEPT INCREASED CONDUCTOR SIZE DUE TO VOLTAGE DROP, SPLICE AND REDUCE CONDUCTORS TO THE LARGEST SIZE CONDUCTOR THE LUGS WILL ACCEPT, WITHIN 10FT OF THE EQUIPMENT.

KEYED NOTES:

1. PROVIDE CIRCUIT BREAKER IN EXISTING PANELS LOCATED IN THE ARFF / SRE BUILDING. CONTRACTOR SHALL MATCH EXISTING BREAKER TYPE AND KAIC RATING. (FOR BIDDING PURPOSES ASSUME 22KAIC.)

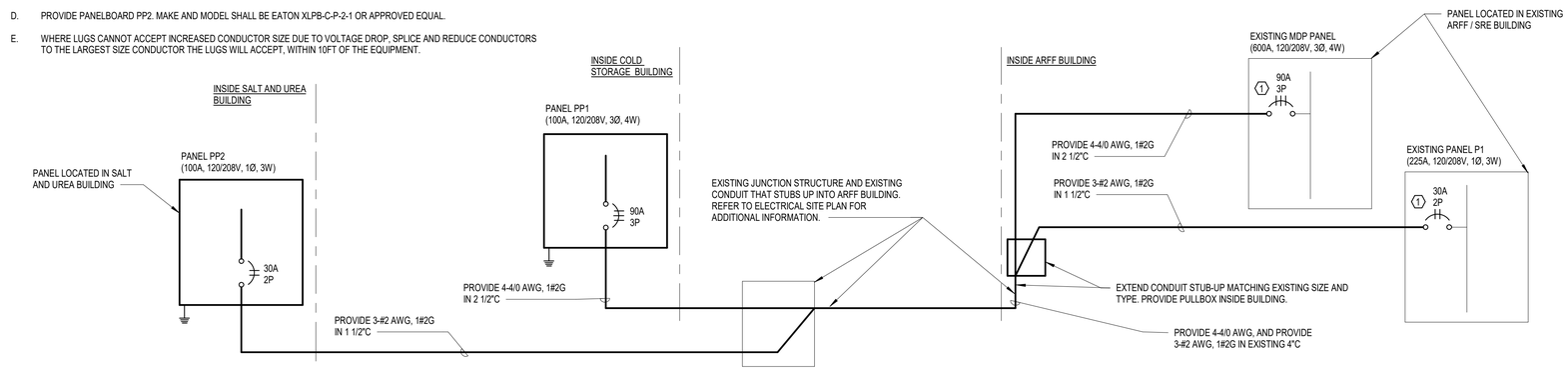

A2 ONE-LINE DIAGRAM

SCALE: NOT TO SCALE

C&S COMPANIES®
C&S Engineers, Inc.
499 Col. Eileen Collins Blvd.
Syracuse, New York 13212
Phone: 315-455-2000
Fax: 315-455-9667
www.cscos.com

CERTIFICATE OF AUTHORIZATION# 0021365

STATE OF NEW YORK · ROBERT MONROE GLEASON, III · LICENSED PROFESSIONAL ENGINEER · LIC. NO. 104326

REGISTRATION EXPIRES: 5/31/2029

HUDSON VALLEY REGIONAL AIRPORT

AIRPORT SUPPORT BUILDINGS
HUDSON VALLEY REGIONAL AIRPORT
263 NEW HACKENSACK ROAD
WAPPINGERS FALLS, NY 12590

MARK	DATE	DESCRIPTION

REVISIONS

PROJECT NO:	128.065.001
DATE:	SEPTEMBER 2026
DRAWN BY:	J. BOSHART
DESIGNED BY:	J. BOSHART
CHECKED BY:	R. GLEASON, P.E.

NO ALTERATION PERMITTED HEREON EXCEPT AS PROVIDED UNDER SECTION 7209 SUBDIVISION 2 OF THE NEW YORK EDUCATION LAW

SYMBOLS, GENERAL NOTES, ONE-LINE DIAGRAM

E-001

SHEET NO. 27/30

Copyright ©

GENERAL NOTES:

A. PROVIDE CONDUIT AND FITTINGS AS FOLLOWS:
   a. EXPOSED, OUTSIDE BUILDING: PVC COATED GALVANIZED RIGID STEEL.
   b. EXPOSED, INSIDE BUILDING: PVC COATED GALVANIZED RIGID STEEL.
   c. ALL FITTINGS SERVING ABOVE GRADE CONDUITS (PVC COATED GRS) IN OR ATTACHED TO THE BUILDING SHALL BE PVC COATED. THERE SHALL BE NO EXPOSED METAL IN THE RACEWAY SYSTEM.

KEYED NOTES:

1. PROVIDE LIGHT FIXTURES ON SALT STORAGE AREA CEILING. MOUNTING HEIGHT = 21'. SEE LUMINAIRE SCHEDULE FOR ADDITIONAL INFORMATION.
2. PROVIDE LIGHT FIXTURES ON UREA STORAGE AREA CEILING. MOUNTING HEIGHT = 13' 6". SEE LUMINAIRE SCHEDULE FOR ADDITIONAL INFORMATION.
3. PROVIDE LIGHT FIXTURE. MOUNTING HEIGHT = 18'. SEE LUMINAIRE SCHEDULE FOR ADDITIONAL INFORMATION.
4. PROVIDE LIGHT FIXTURE. MOUNTING HEIGHT = 13'. SEE LUMINAIRE SCHEDULE FOR ADDITIONAL INFORMATION.
5. PROVIDE LIGHT FIXTURE. MOUNTING HEIGHT = 8'. SEE LUMINAIRE SCHEDULE FOR ADDITIONAL INFORMATION.
6. PROVIDE A NEMA 4X RATED SWITCH/COVER ASSEMBLY.

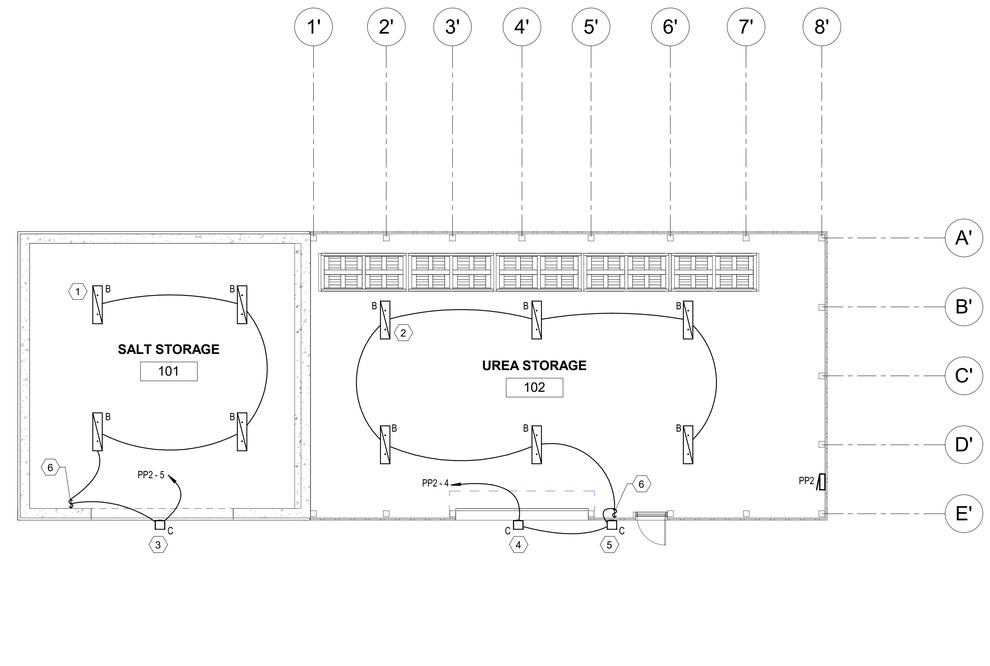

B1 SALT AND UREA STORAGE LIGHTING PLAN

SCALE: 1/8" = 1'-0"

0 4' 8' 16'

GENERAL NOTES:

A. PROVIDE CONDUIT AND FITTINGS AS FOLLOWS:
   a. EXPOSED, OUTSIDE BUILDING: PVC COATED GALVANIZED RIGID STEEL.
   b. EXPOSED, INSIDE BUILDING: PVC COATED GALVANIZED RIGID STEEL.
   c. ALL FITTINGS SERVING ABOVE GRADE CONDUITS (PVC COATED GRS) IN OR ATTACHED TO THE BUILDING SHALL BE PVC COATED. THERE SHALL BE NO EXPOSED METAL IN THE RACEWAY SYSTEM.

KEYED NOTES:

1. PROVIDE ALL MOUNTING PROVISIONS FOR PANEL. REFER TO ELECTRICAL SITE PLAN AND ONE-LINE DIAGRAM FOR ADDITIONAL INFORMATION.

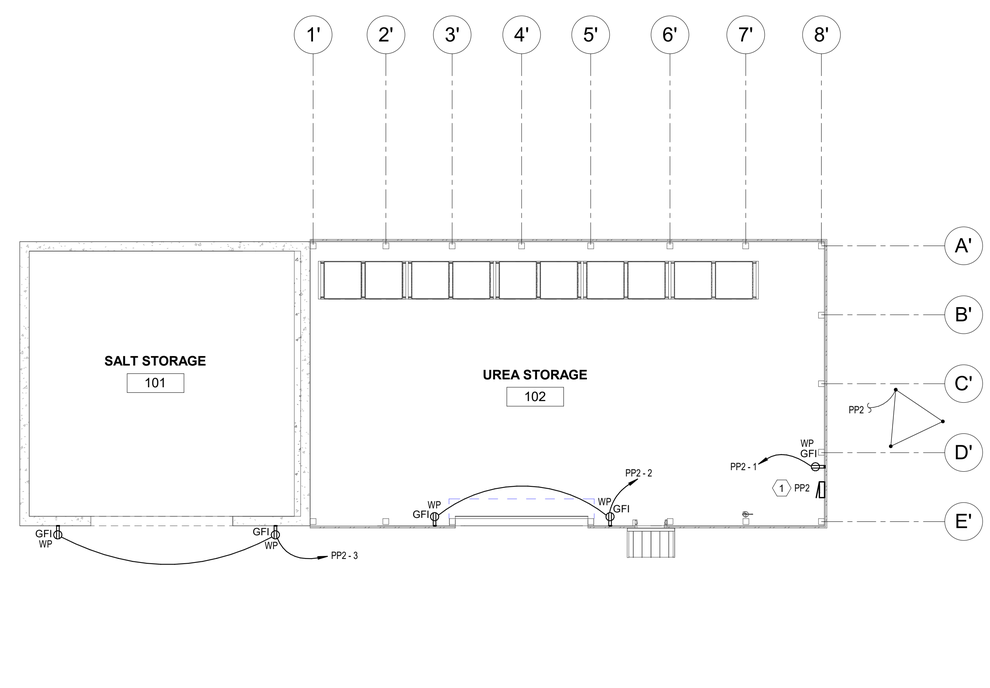

A1 SALT AND UREA STORAGE POWER PLAN

SCALE: 1/8" = 1'-0"

0 4' 8' 16'

C&S COMPANIES®

C&S Engineers, Inc.
499 Col. Eileen Collins Blvd.
Syracuse, New York 13212
Phone: 315-455-2000
Fax: 315-455-9667
www.cscos.com

CERTIFICATE OF AUTHORIZATION# 0021365

STATE OF NEW YORK · ROBERT MONROE GLEASON III · LICENSED PROFESSIONAL ENGINEER · LIC. NO. 104326

REGISTRATION EXPIRES: 5/31/2029

HUDSON VALLEY REGIONAL AIRPORT

AIRPORT SUPPORT BUILDINGS
HUDSON VALLEY REGIONAL AIRPORT
263 NEW HACKENSACK ROAD
WAPPINGERS FALLS, NY 12590

MARK	DATE	DESCRIPTION

REVISIONS

PROJECT NO:	128.065.001
DATE:	SEPTEMBER 2026
DRAWN BY:	J. BOSHART
DESIGNED BY:	J. BOSHART
CHECKED BY:	R. GLEASON, P.E.

NO ALTERATION PERMITTED HEREON EXCEPT AS PROVIDED UNDER SECTION 7209 SUBDIVISION 2 OF THE NEW YORK EDUCATION LAW

SALT AND UREA STORAGE POWER AND LIGHTING PLAN

E-101

SHEET NO. 28/30

Copyright ©

GENERAL NOTES:

A. PROVIDE CONDUIT AND FITTINGS AS FOLLOWS:
   a. EXPOSED, OUTSIDE BUILDING: PVC COATED GALVANIZED RIGID STEEL.
   b. EXPOSED, INSIDE BUILDING: PVC COATED GALVANIZED RIGID STEEL.
   c. ALL FITTINGS SERVING ABOVE GRADE CONDUITS (PVC COATED GRS) IN OR ATTACHED TO THE BUILDING SHALL BE PVC COATED. THERE SHALL BE NO EXPOSED METAL IN THE RACEWAY SYSTEM.

KEYED NOTES:

1. PROVIDE LIGHT FIXTURES ON COLD STORAGE AREA CEILING. MOUNTING HEIGHT = 14' - 20'. SEE LUMINAIRE SCHEDULE FOR ADDITIONAL INFORMATION.

2. PROVIDE LIGHT FIXTURE. MOUNTING HEIGHT = 18' 10". SEE LUMINAIRE SCHEDULE FOR ADDITIONAL INFORMATION.

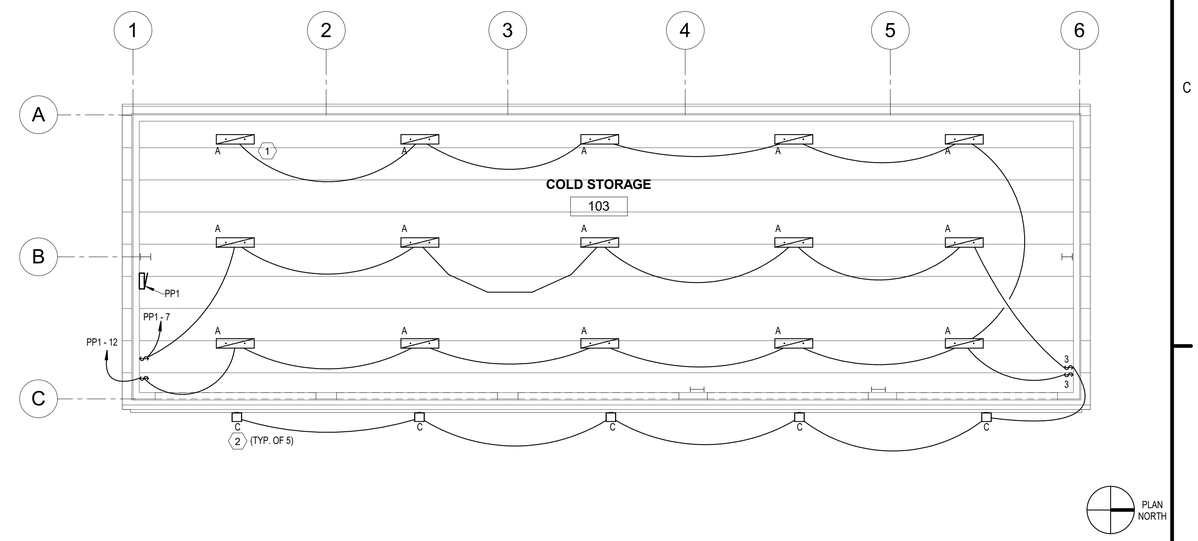

B1 COLD STORAGE LIGHTING PLAN

SCALE: 1/8" = 1'-0"

0 4' 8' 16'

GENERAL NOTES:

A. PROVIDE CONDUIT AND FITTINGS AS FOLLOWS:
   a. EXPOSED, OUTSIDE BUILDING: PVC COATED GALVANIZED RIGID STEEL.
   b. EXPOSED, INSIDE BUILDING: PVC COATED GALVANIZED RIGID STEEL.
   c. ALL FITTINGS SERVING ABOVE GRADE CONDUITS (PVC COATED GRS) IN OR ATTACHED TO THE BUILDING SHALL BE PVC COATED. THERE SHALL BE NO EXPOSED METAL IN THE RACEWAY SYSTEM.

KEYED NOTES:

1. PROVIDE ALL MOUNTING PROVISIONS FOR PANEL. REFER TO ELECTRICAL SITE PLAN AND ONE-LINE DIAGRAM FOR ADDITIONAL INFORMATION.

2. COORDINATE LOCATION AND TYPE OF EV CHARGER RECEPTACLE WITH OWNER PRIOR TO ROUGH-IN. EV CHARGER UNIT FURNISHED BY OWNER.

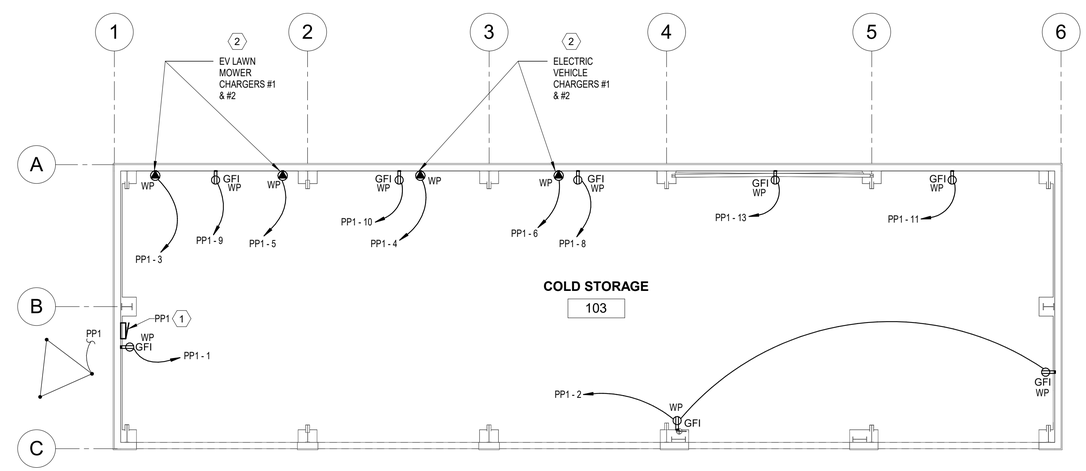

A1 COLD STORAGE POWER PLAN

SCALE: 1/8" = 1'-0"

0 4' 8' 16'

C&S COMPANIES®

C&S Engineers, Inc.
499 Col. Eileen Collins Blvd.
Syracuse, New York 13212
Phone: 315-455-2000
Fax: 315-455-9667
www.cscos.com

CERTIFICATE OF AUTHORIZATION# 0021365

STATE OF NEW YORK · ROBERT MONROE GLEASON III · LICENSED PROFESSIONAL ENGINEER · No. 104326

REGISTRATION EXPIRES: 5/31/2029

HUDSON VALLEY REGIONAL AIRPORT

AIRPORT SUPPORT BUILDINGS
HUDSON VALLEY REGIONAL AIRPORT
263 NEW HACKENSACK ROAD
WAPPINGERS FALLS, NY 12590

MARK	DATE	DESCRIPTION

REVISIONS

PROJECT NO:	128.065.001
DATE:	SEPTEMBER 2026
DRAWN BY:	J. BOSHART
DESIGNED BY:	J. BOSHART
CHECKED BY:	R. GLEASON, P.E.

NO ALTERATION PERMITTED HEREON EXCEPT AS PROVIDED UNDER SECTION 7209 SUBDIVISION 2 OF THE NEW YORK EDUCATION LAW

COLD STORAGE POWER AND LIGHTING PLAN

E-102

SHEET NO. 29/30

Copyright ©

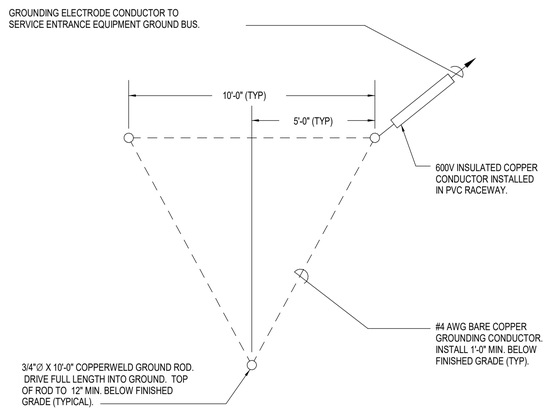

GENERAL NOTES:

A. PROVIDE SIZE #4 AWG GROUNDING ELECTRODE CONDUCTOR UNLESS OTHERWISE NOTED.

C1 ELECTRODE GROUND GRID

SCALE: NOT TO SCALE

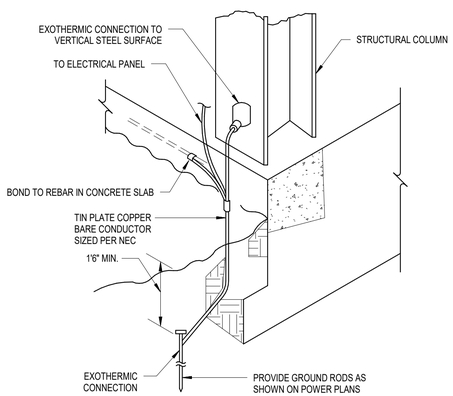

B1 GROUND BOND DETAIL

SCALE: NOT TO SCALE

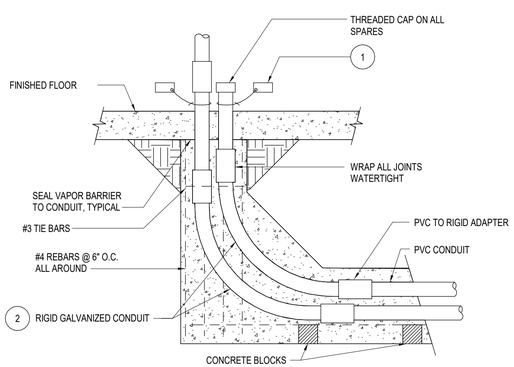

KEYED NOTE:

1. AFFIX ENGRAVED PLASTIC NAMEPLATE INDICATING CONDUIT NUMBER OR CIRCUIT IDENTIFICATION AT EACH CONDUIT STUB-UP. ATTACH WITH NYLON CABLE TIE.
2. REFER TO ELECTRICAL SITE PLAN FOR QUANTITY OF CONDUITS IN THE DUCTBANK.

A1 TYPICAL CONDUIT STUB-UP INSIDE BUILDING

SCALE: NOT TO SCALE

PANEL SCHEDULE PP2

BUS SIZE: 100 A
VOLTS: 120/240 Single
PHASE: 1
WIRE: 3
POLES: 24

MAIN TYPE: MCB
MAIN BREAKER: 30 A
GND. BAR TYPE: COPPER
SC RATING: 10 KAIC
ENCLOSURE: NEMA 4X

INSTALLATION: SURFACE
LOCATION: UREA STORAGE 102
NOTES:

CIRCUIT DESCRIPTION	WIRE SIZE	CONDUIT	CB. AMPS	Poles	CKT	A	B	CKT	Poles	CB. AMPS	CONDUIT	WIRE SIZE	CIRCUIT DESCRIPTION
PANEL RECEPTACLE	1-#12, 1-#12, 1-#12	3/4"	20 A	1	1			2	1	20 A	3/4"	1-#12, 1-#12, 1-#12	UREA RECEPTACLES
SALT OUTSIDE RECEPTACLES	1-#12, 1-#12, 1-#12	3/4"	20 A	1	3			4	1	20 A	3/4"	1-#12, 1-#12, 1-#12	UREA LIGHTING
SALT LIGHTING	1-#12, 1-#12, 1-#12	3/4"	20 A	1	5			6	1	20 A	--	--	SPARE
SPARE	--	--	20 A	1	7			8	1	20 A	--	--	SPARE
SPARE	--	--	20 A	1	9			10	1	20 A	--	--	SPARE
SPARE	--	--	20 A	1	11			12	1	20 A	--	--	SPARE
SPACE	--	--	--	1	13			14	1	--	--	--	SPACE
SPACE	--	--	--	1	15			16	1	--	--	--	SPACE
SPACE	--	--	--	1	17			18	1	--	--	--	SPACE
SPACE	--	--	--	1	19			20	1	--	--	--	SPACE
SPACE	--	--	--	1	21			22	1	--	--	--	SPACE
SPACE	--	--	--	1	23			24	1	--	--	--	SPACE

PANEL SCHEDULE PP1

BUS SIZE: 100 A
VOLTS: 120/208 Wye
PHASE: 3
WIRE: 4
POLES: 24

MAIN TYPE: MCB
MAIN BREAKER: 90 A
GND. BAR TYPE: COPPER
SC RATING: 10 KAIC
ENCLOSURE: NEMA 3R

INSTALLATION: SURFACE
LOCATION: COLD STORAGE 103
NOTES:

CIRCUIT DESCRIPTION	WIRE SIZE	CONDUIT	CB. AM...	Poles	CKT	A	B	C	CKT	Poles	CB. AM...	CONDUIT	WIRE SIZE	CIRCUIT DESCRIPTION
PANEL RECEPTACLE	1-#12, 1-#12, 1-#12	3/4"	20 A	1	1				2	1	20 A	3/4"	1-#12, 1-#12, 1-#12	CONVENIENCE RECEPTACLES
* EV MOWER CHARGER #1	1-#12, 1-#12, 1-#12	3/4"	20 A	1	3				4	1	40 A	1"	1-#8, 1-#8, 1-#10	* EV CHARGER #1
* EV MOWER CHARGER #2	1-#12, 1-#12, 1-#12	3/4"	20 A	1	5				6	1	40 A	1"	1-#8, 1-#8, 1-#10	* EV CHARGER #2
LIGHTING	1-#12, 1-#12, 1-#12	3/4"	20 A	1	7				8	1	20 A	3/4"	1-#12, 1-#12, 1-#12	BLOCK HEATER RECEPTACLE
BLOCK HEATER RECEPTACLE	1-#12, 1-#12, 1-#12	3/4"	20 A	1	9				10	1	20 A	3/4"	1-#12, 1-#12, 1-#12	BLOCK HEATER RECEPTACLE
BLOCK HEATER RECEPTACLE	1-#12, 1-#12, 1-#12	3/4"	20 A	1	11				12	1	20 A	3/4"	1-#12, 1-#12, 1-#12	LIGHTING
BLOCK HEATER RECEPTACLE	1-#12, 1-#12, 1-#12	3/4"	20 A	1	13				14	1	20 A	--	--	SPARE
SPARE	--	--	20 A	1	15				16	1	20 A	--	--	SPARE
SPARE	--	--	20 A	1	17				18	1	20 A	--	--	SPARE
SPACE	--	--	--	1	19				20	1	--	--	--	SPACE
SPACE	--	--	--	1	21				22	1	--	--	--	SPACE
SPACE	--	--	--	1	23				24	1	--	--	--	SPACE

* COORDINATE EV BREAKER SIZE WITH OWNER PRIOR TO PURCHASE.

C&S COMPANIES®
C&S Engineers, Inc.
499 Col. Eileen Collins Blvd.
Syracuse, New York 13212
Phone: 315-455-2000
Fax: 315-455-9667
www.cscos.com

CERTIFICATE OF AUTHORIZATION# 0021365

STATE OF NEW YORK · ROBERT MONROE GLEASON III · LICENSED PROFESSIONAL ENGINEER · LIC. NO. 104326

REGISTRATION EXPIRES: 5/31/2029

HUDSON VALLEY REGIONAL AIRPORT

AIRPORT SUPPORT BUILDINGS
HUDSON VALLEY REGIONAL AIRPORT
263 NEW HACKENSACK ROAD
WAPPINGERS FALLS, NY 12590

MARK	DATE	DESCRIPTION

REVISIONS

PROJECT NO:	128.065.001
DATE:	SEPTEMBER 2026
DRAWN BY:	J. BOSHART
DESIGNED BY:	J. BOSHART
CHECKED BY:	R. GLEASON, P.E.

NO ALTERATION PERMITTED HEREON EXCEPT AS PROVIDED UNDER SECTION 7209 SUBDIVISION 2 OF THE NEW YORK EDUCATION LAW

SCHEDULES AND DETAILS

E-601

SHEET NO. 30/30

Copyright ©